Professional Certificate of Competency in Electrical Power System Fundamentals for Non-Electrical Engineers

Webinar 4

Module 4: Electrical Measurements and Instrument Transformers

Module 5: Earthing and Lightning Protection

Module 4:
Electrical Measurements and Instrument Transformers

Module 4 Topics

- Measurement of electrical parameters
- Instrument transformers
- Basics of smart metering

Measuring Voltage, Current and Resistance

Measuring *voltage:*

- The voltmeter or multimeter must be placed in parallel to (across) the measuring points. The internal resistance of a voltmeter is extremely large and will draw a small negligible current value that won't affect the circuit's behavior.

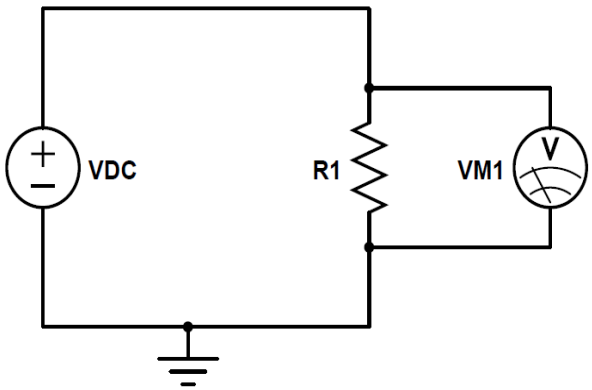

Measuring *current:*

- The ammeter or multimeter must be placed in series with the circuit. The internal resistance of an ammeter is extremely low and creates a negligible voltage drop that won't affect circuit behavior.

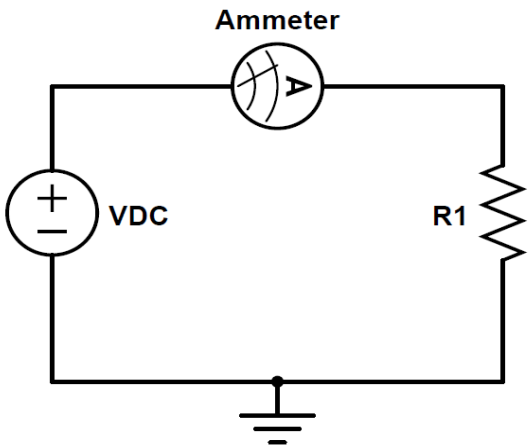

Measuring *resistance:*

- The ohmmeter or multimeter must be placed in parallel to the resistor under measurement.

Energy Measurement

- Since the loads in a circuit vary over time depending on consumer requirements, it is necessary to integrate the total power over a period of time to capture the total energy consumed
- Energy meters measure electricity used by consumer
- Periodic readings show electrical energy consumed during billing cycle
- Meters are usually calibrated in billing units to enable charging appropriate tariff

Demand Meters

- Though energy consumption is over a period, the capital cost needed to meet the consumer load is also dependent on the maximum kW demand by the consumer. Hence Industrial and commercial major Customers are also charged based on maximum demand (every billing cycle) to ensure that customers limit their loads.
- kilo-volt ampere (kVA) or kW meters are used to measure maximum demand.
- Measured demand, is not the value at particular instant but an average of demand over 15 minute or 30 minute cycle.
- At end of each billing cycle, marker is normally reset so the meter is ready to record maximum demand for next billing cycle.

Digital Instruments

- Data measured electronically
- Microprocessor based, have non-volatile memory to record, store, communicate measured data
- Versatile and low-cost
- Accuracies of electronic meters are typically class 0.2, 0.5 and 1.0 (percentage error)

Digital Instruments

- Difficult to tamper with and if attempt is made to tamper them, they can be programmed to send alarm signals and record the information.
- Programmability of microprocessor very useful for incorporating different features like import-export, Time of Use (TOU) metering, load pattern analysis, etc.
- Increasingly applied in Supervisory Control and Data Acquisition (SCADA) systems with communication ports to support various communication platforms as well as for downloading of data.

Multiple Tariff Metering

- Load pattern of consumers varies over time based on usage cycle
- Generally surplus of electrical generation capacity at times of low demand
- Time of use (TOU) metering facilitates control of loads and reduce supply–demand gap
- TOU concept involves dividing day, month, and year into tariff slots based on demand pattern
- Utility company charges higher rates at peak load periods and low tariff rates at off-peak load periods
- Using TOU metering it is possible to charge customers different tariffs at different times of day

Instrument Transformers

- Transform currents or voltages from a usually high value to a value appropriate for relays and instruments (1 or 5 Amps for currents or 110 V for voltage) for protection and metering applications
- Insulate the relays, metering and instruments from the primary high voltage system
- Provide possibilities of standardising the relays and instruments, etc. to a few rated currents and voltages

Current Transformers (CTs)

The primary currents are measured and transformed to secondary winding to a low standard value for connection to meters and relays.

Metering class CTs:

- Have to be very accurate as customers will be billed on the information provided by measuring the current from the metering CTs. Cannot handle fault currents.

Protection class CTs:

- Have to measure fault currents many times in excess of full load current to drive relays to trip. Accuracy not as high as metering class CTs.

Voltage Transformers (VTs)

- Electromagnetic type (up to 33 kV)
- Capacitive type (66 kV and above)

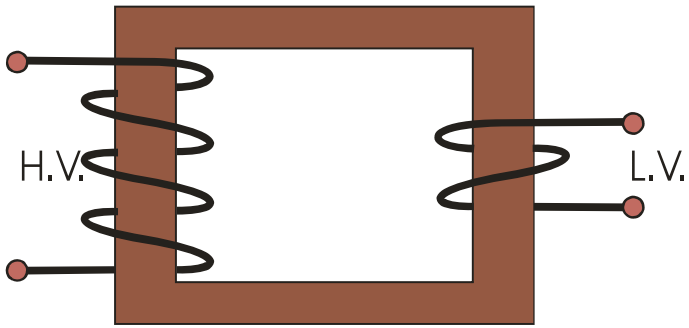

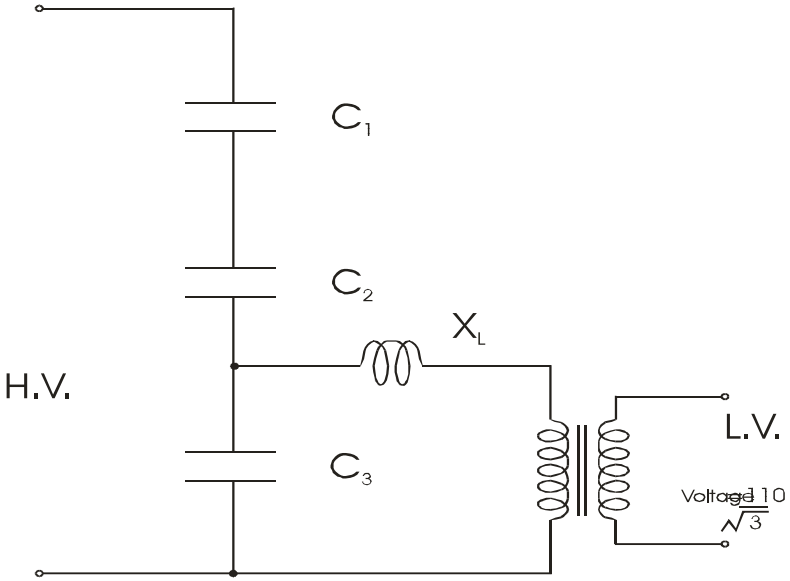

Smart Meters

- Allow consumers to measure, record energy consumption in short intervals.
- Capable of two-way communication, which allows energy providers to read and control features of meter remotely.
- Allows residential customers to access residential TOU tariff under which energy is charged at rates set for defined time periods within 24 h of each day.
- Energy consumed is charged at rate applicable to time block in which it is consumed.
- Meter uses internal clock to energise a circuit during off-peak period (switched circuit) to control off-peak loads.
- Larger loads are controlled by a separate contactor.

Benefits of a Smart Meter

- Improved accuracy of meter readings
- Early detection of power quality issues
- Improved monitoring of power outages to assist maintenance crews in reducing restoration times
- Ability to install in-home display (IHD) to help monitor energy use

Smart Meters Application in Australia

- A smart meter measures kWh usage in 15-30 minute intervals and electronically sends this to the electricity provider.
- The electricity provider can set up an in-house display system for consumer to view their usage. Alternatively, they may create apps and web portals via third party developers, which can be logged in with user id to access detailed information regarding energy usage including the times of day when the most power is used.
- In-house systems can also be set up with alerts to caution usage.
- Since 1 December 2017, new and replacement meters installed in Australian homes and small business houses are smart meters.

Automatic Meter Reading (AMR)

- Traditional metering method requires visits to each consumer once every billing cycle, calculate due amount.
- AMR meters can be read remotely, with little human intervention.
- Automatic collection of consumption, diagnostic, and status data from energy metering devices.
- Data transferred to central database for billing, troubleshooting, analysing.
- Billing can be based on near real-time consumption rather than estimates based on previous or predicted consumption.

Automatic Meter Reading (AMR)

- Timely information coupled with analysis can help both utility providers and customers better control use and production of electric energy.
- Automatic meter reading technologies include handheld, mobile, and network technologies, radio frequency (RF) or power line transmission.

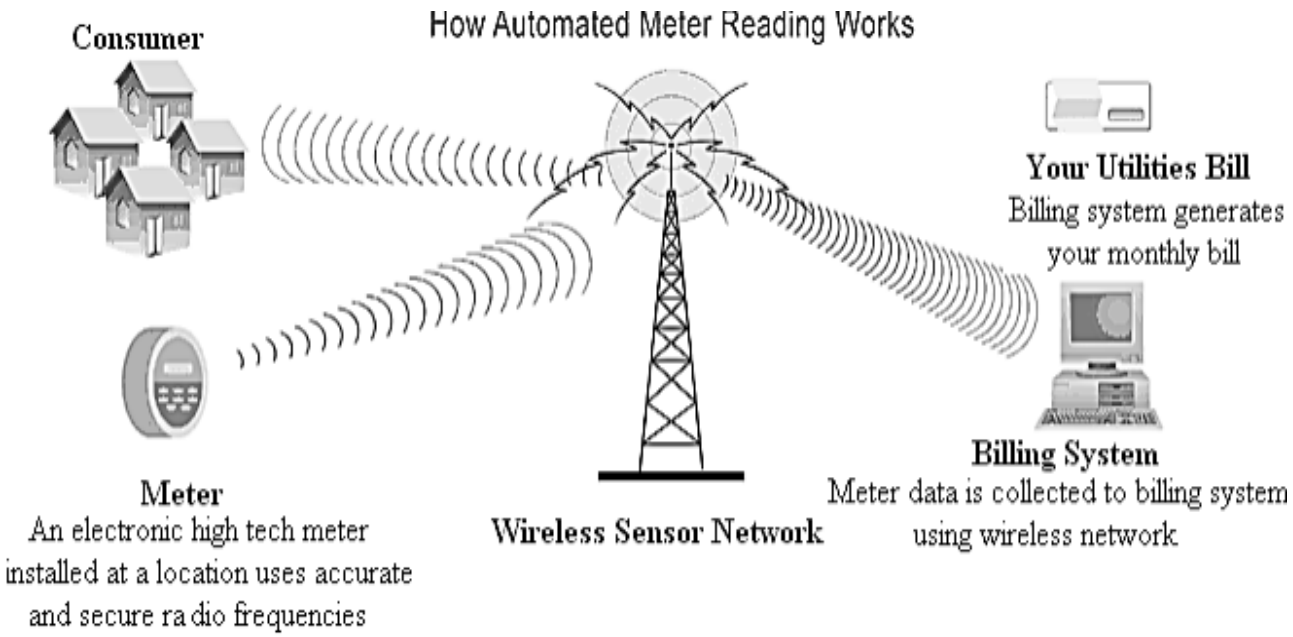

Functioning of AMR

- Information from Meter Interface Unit (MIU) may be retrieved, stored in intermediate nodes or delivered directly to power utility.
- Transfer of meter data from network to utility may be instantaneous or stored for later transmission to utility host computer.
- Often, on a fixed network, data from MIU is transmitted via wide-area network (WAN) back to host computer.
- WAN may be private data services or public data networks.

Module 5:
Earthing and Lightning Protection

Module 5 Topics

- Need for earthing
- Direct and indirect shocks, touch and step potential
- Earthing system components
- Measurement of earth resistance
- Lightning protection

Earthing

- Neutral or system earthing used to detect faults during abnormal operations and protect the supply system as well as the connected equipment.
- Enclosure or body earthing to ensure the points normally contacted by humans and livestock of an electrical enclosure are at zero potential and prevent electric shocks (flow of current through the body).
- Lightning protection earthing to divert the heavy lightning currents flowing to ground during thunderstorms.

Solid Earthing

- Neutral connection on transformer is connected to earth by a solid conductor.
- Low cost and suited for LV systems.
- Can cause higher fault currents and shock voltages in high voltage systems.

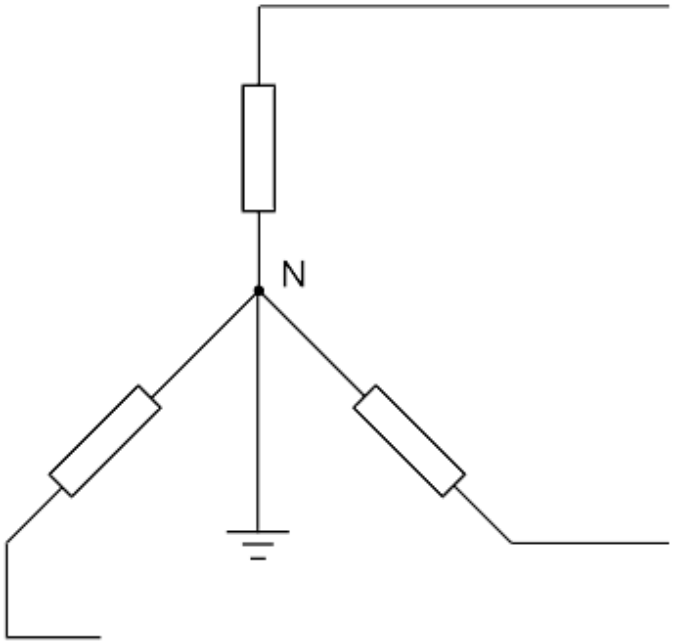

Resistance Earthing

- Neutral connection on transformer is connected to earth through a fixed resistance to limit the magnitude of earth fault current.
- Mainly used on systems operating at higher voltages.

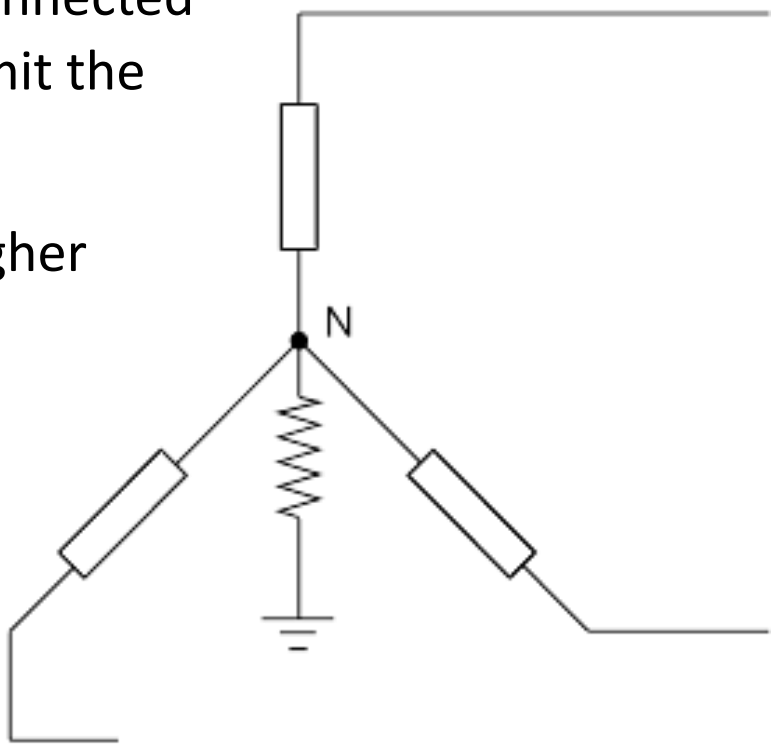

Direct and Indirect Contact Shock

- A direct contact shock occurs when conductors that are meant to be live such as bare wire or terminals are touched under live conditions.
- Indirect contact shock is touching an exposed conductive part that has become live under fault conditions.

Touch Potential

Solidly earthed transformer neutral

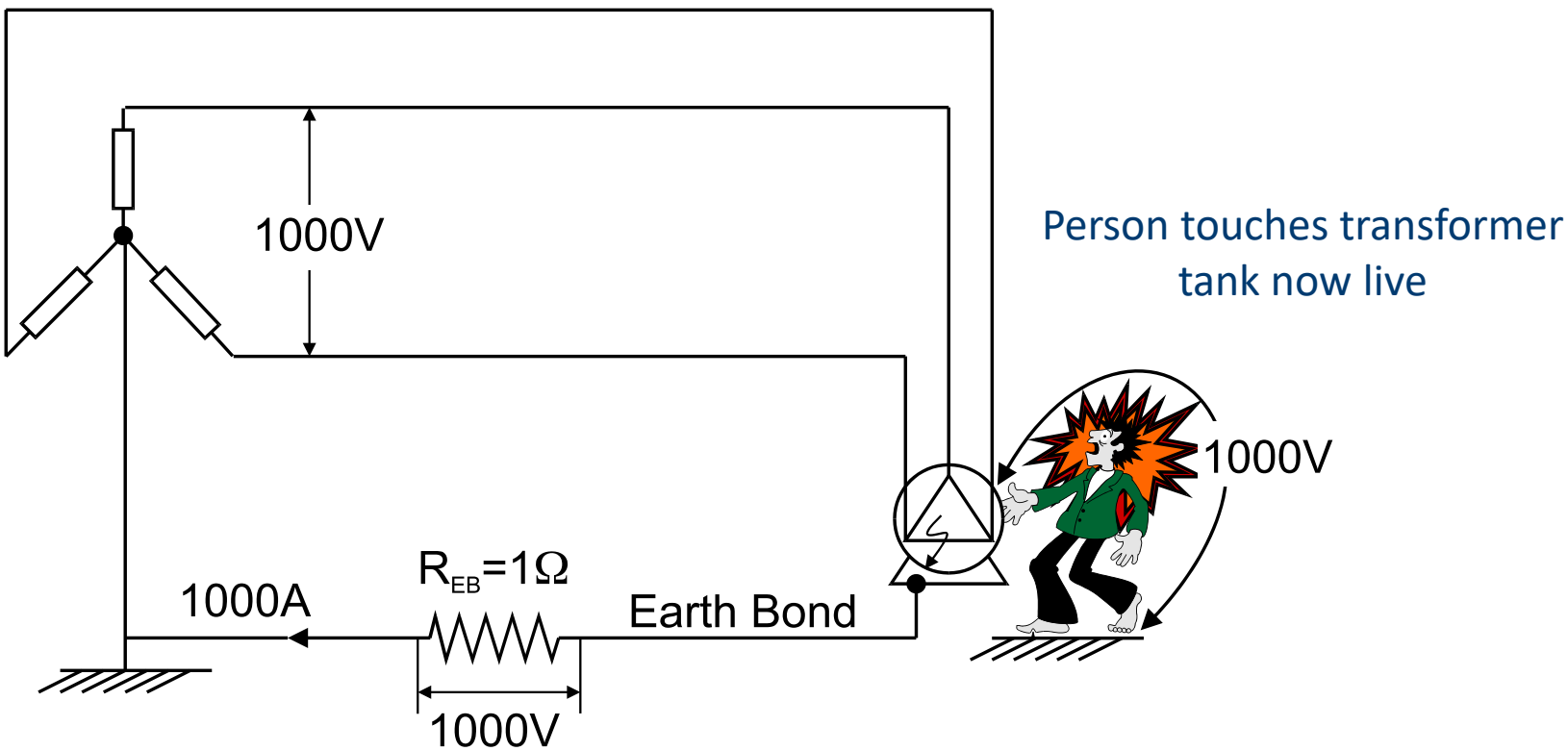

Touch Potential

Resistance earthed transformer neutral

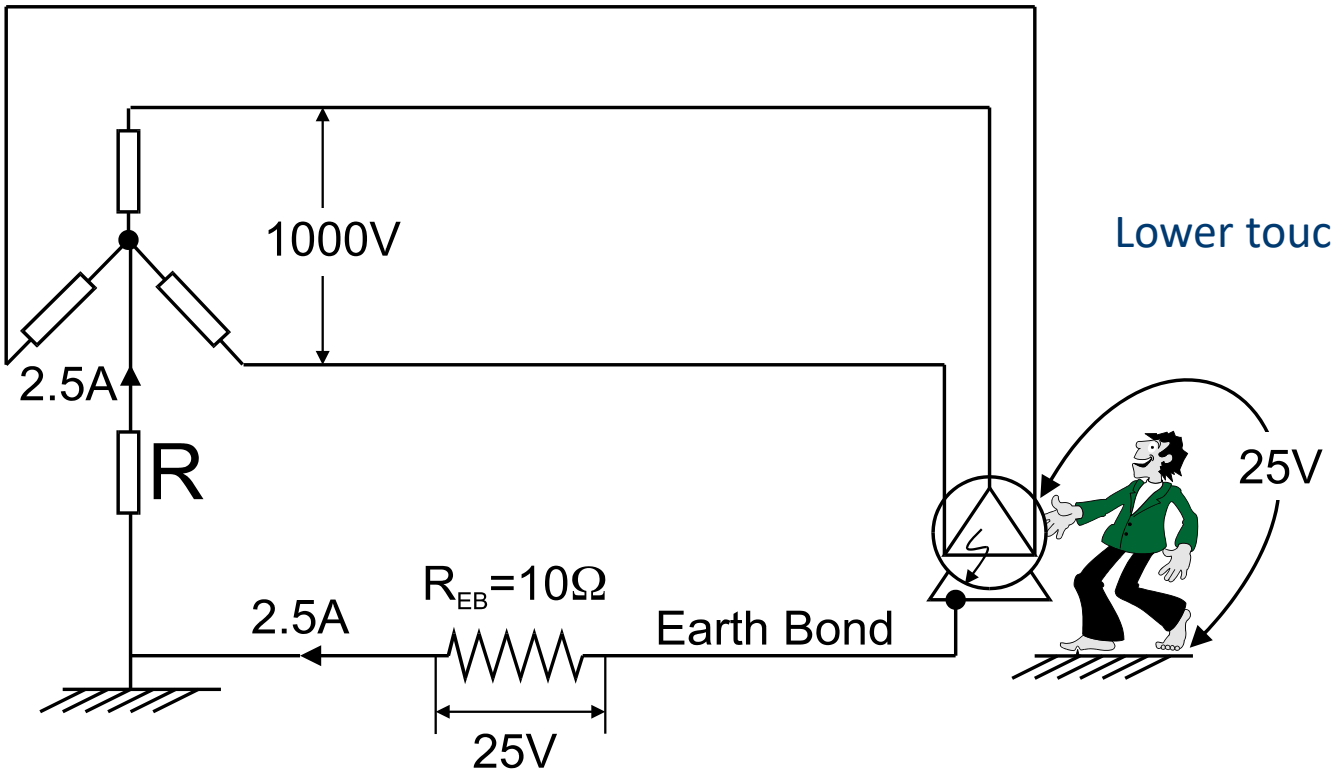

Lower touch potential

Multiple Grounding Points-bonding

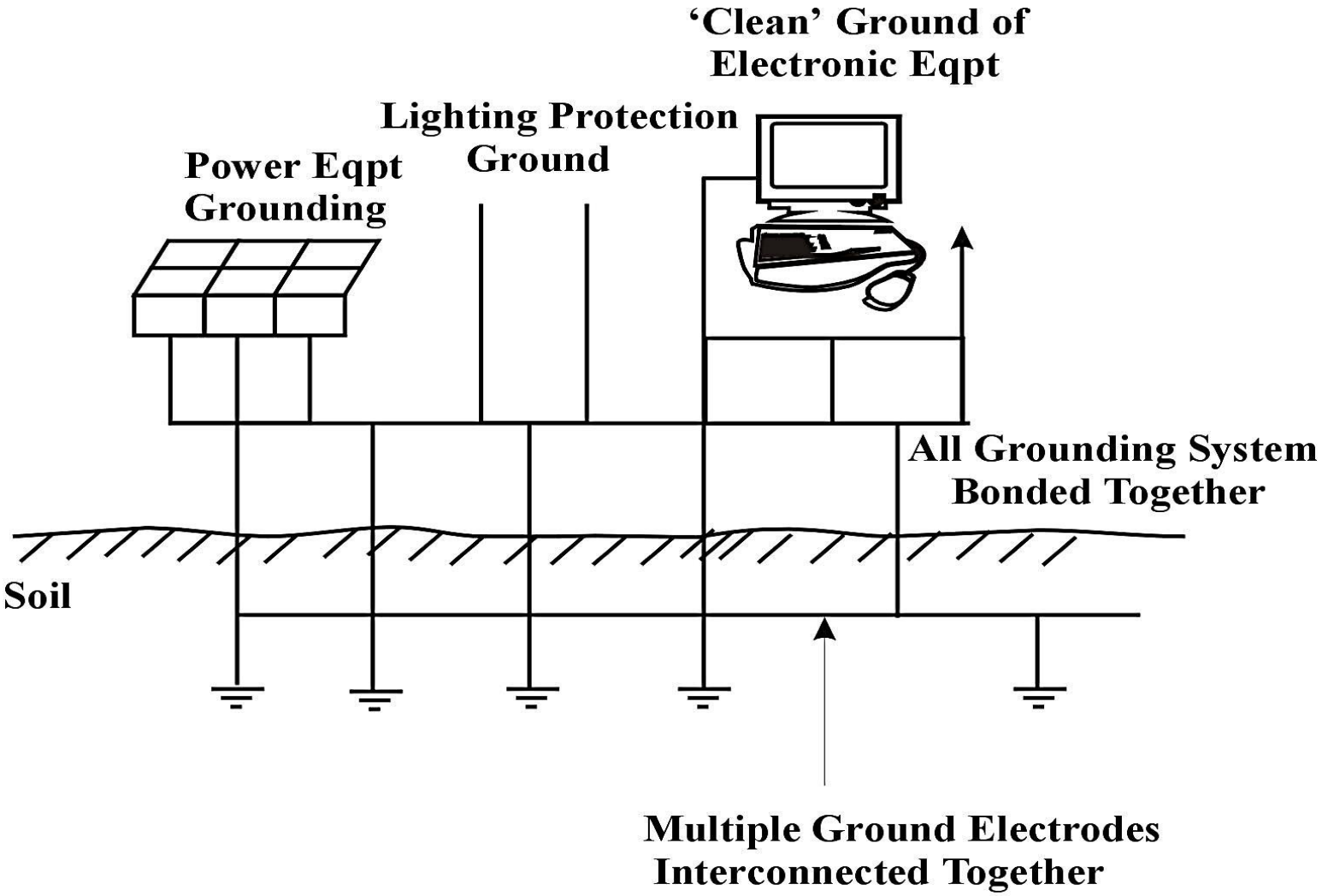

Ground Electrodes

- The connection to ground mass is normally achieved by a ground electrode that is buried into the earth mass to a certain depth
- Use different types of materials (Copper, Copper clad steel, galvanised steel, Copper clad stainless steel)
- Must conform to local electrical installation standards

Factors Contributing to Earth Resistance

Material resistance:

- Resistance of electrode material
- Contact resistance of the electrode with soil
- These two factors however have negligible effect on the total resistance offered for fault current

Resistance of the soil itself (soil resistivity):

- Soil is the biggest factor that contributes to a resistance value when using earth rods. It depends on:
  - Presence of conducting salts
  - Moisture content
  - Temperature
  - Level of compaction

Effect of Soil Moisture Content

Moisture content %	Resistivity in Ohm m		
	Top soil	Sandy loam	Red Clay
2	***	1850	***
4	***	600	***
6	1350	380	***
8	900	280	***
10	600	220	***
12	360	170	1800
14	250	140	550
16	200	120	200
18	150	100	140
20	120	90	100
22	100	80	90
24	100	70	80

Effect of Soil Temperature

Temperature Deg. C	Resistivity Ohm m
-5	700
0	300
0	100
10	80
20	70
30	60
40	50
50	40

Soil Resistivity Measurement

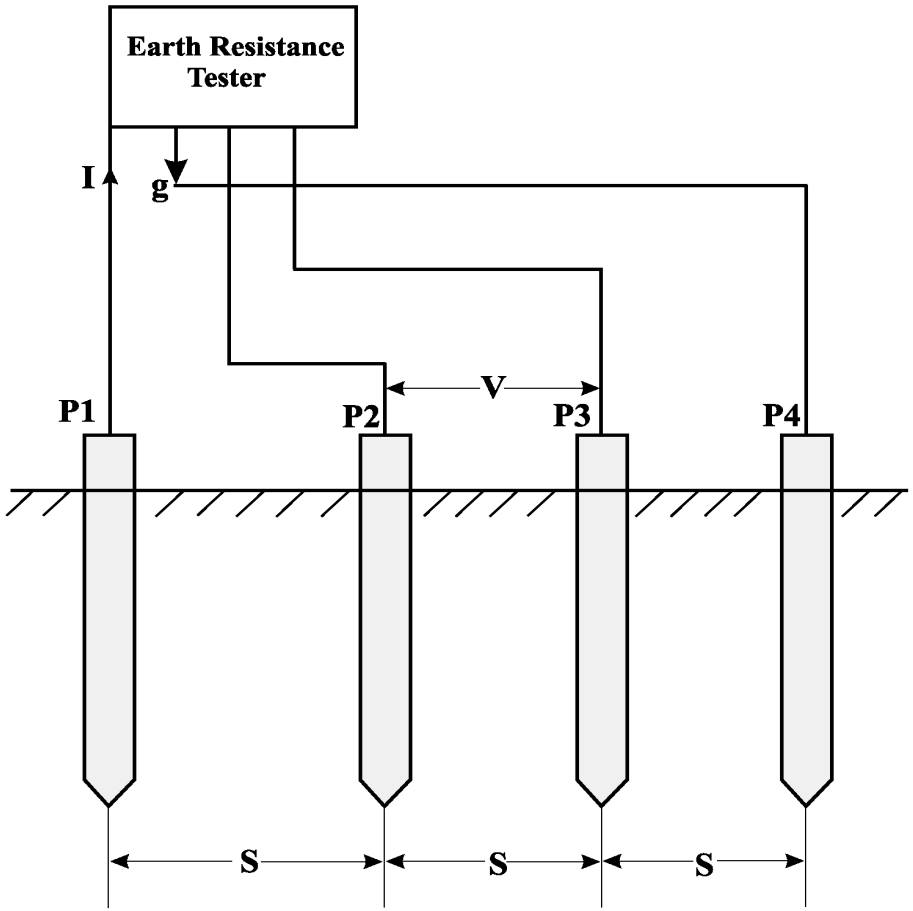

P1 and P4 : Current electrodes
P2 and P3 : Potential electrodes
I : Current (AC) injected by the instrument into ground
V : Voltage drop in Soil

Lightning

Lightning is a natural phenomenon and is basically flow of electric charges to the ground under thunder storm conditions.

- **Effects** of lightning:
  - Direct flow of heavy lightning currents flowing through humans and livestock.
  - Direct flow of heavy lightning currents through tall structures impacting the structures and occupants.
  - Generation of transient over voltages in electrical systems impacting the system as well as connected equipment.
- Hence, it is very essential to divert the lightning discharges safely and very quickly to the ground without leading to the above impacts.

Cone of Protection

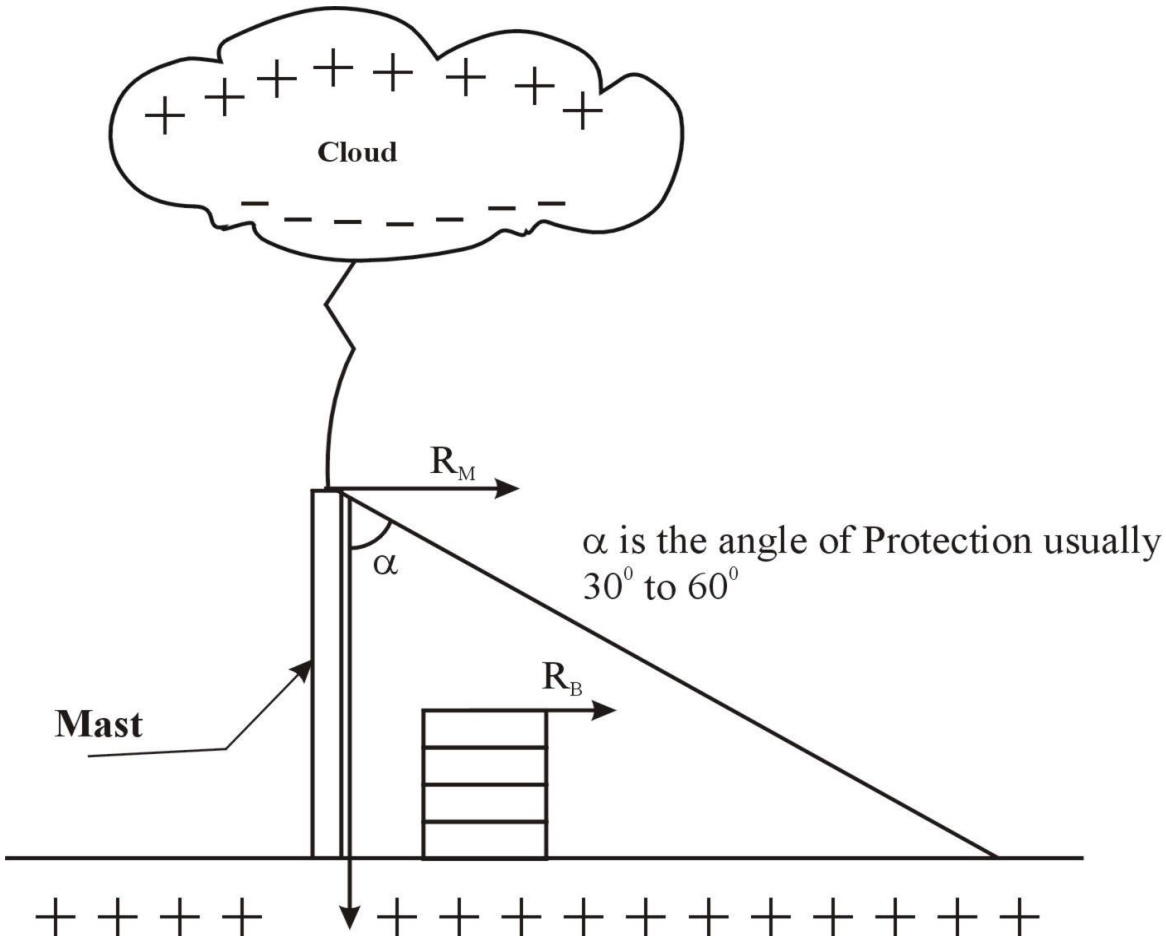

A Typical Mesh Type Protection

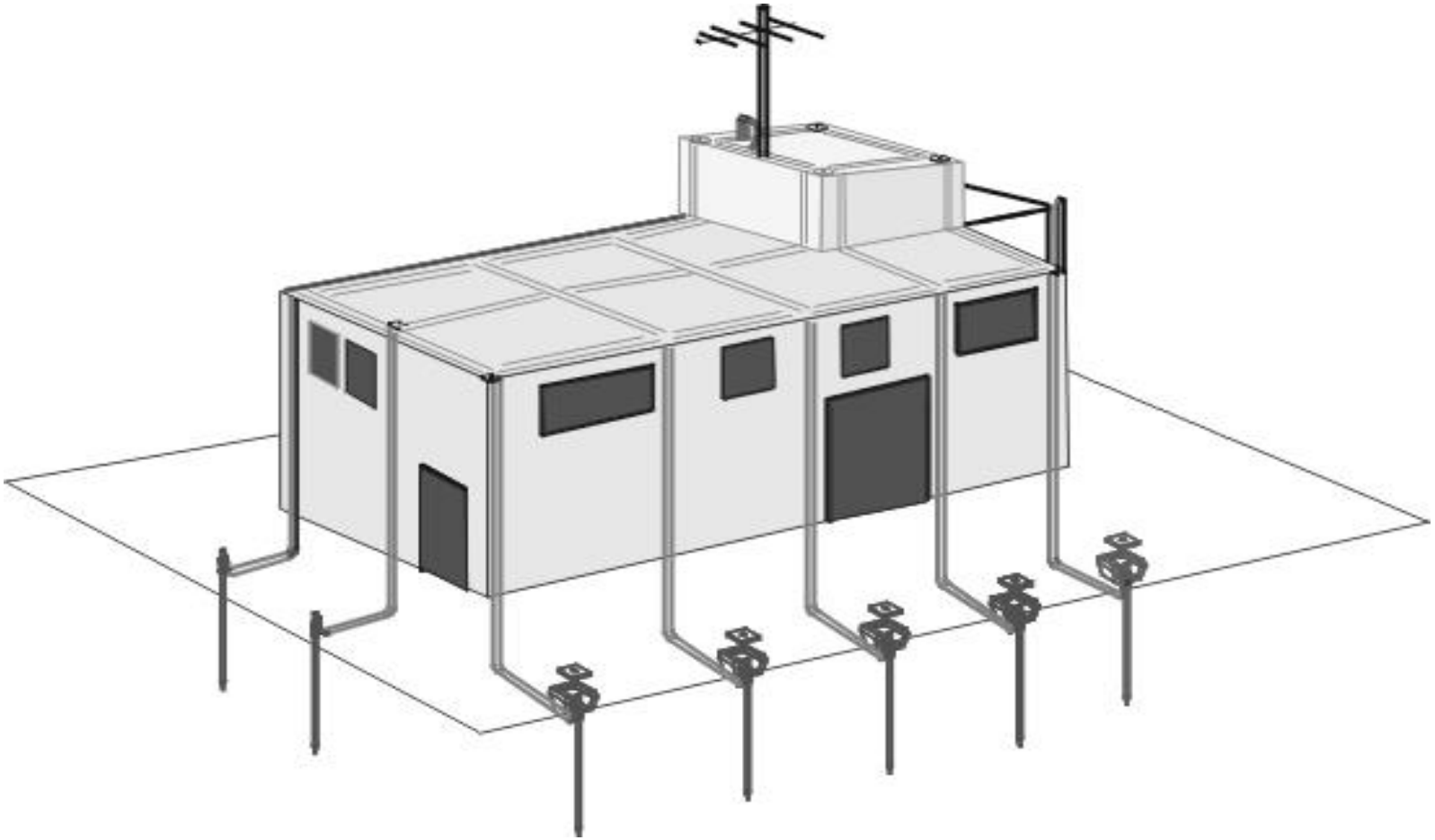

Metal Oxide Varistor (MOV)

An **MOV lightning arrestor** is form of *surge protection device.*

- **Function:** absorbs the surge energy and conducts it to ground without allowing the energy to flow through the protected equipment.
- **Application:** When electrical insulation is prone to failures due to transient over voltages arising from lightning strikes.

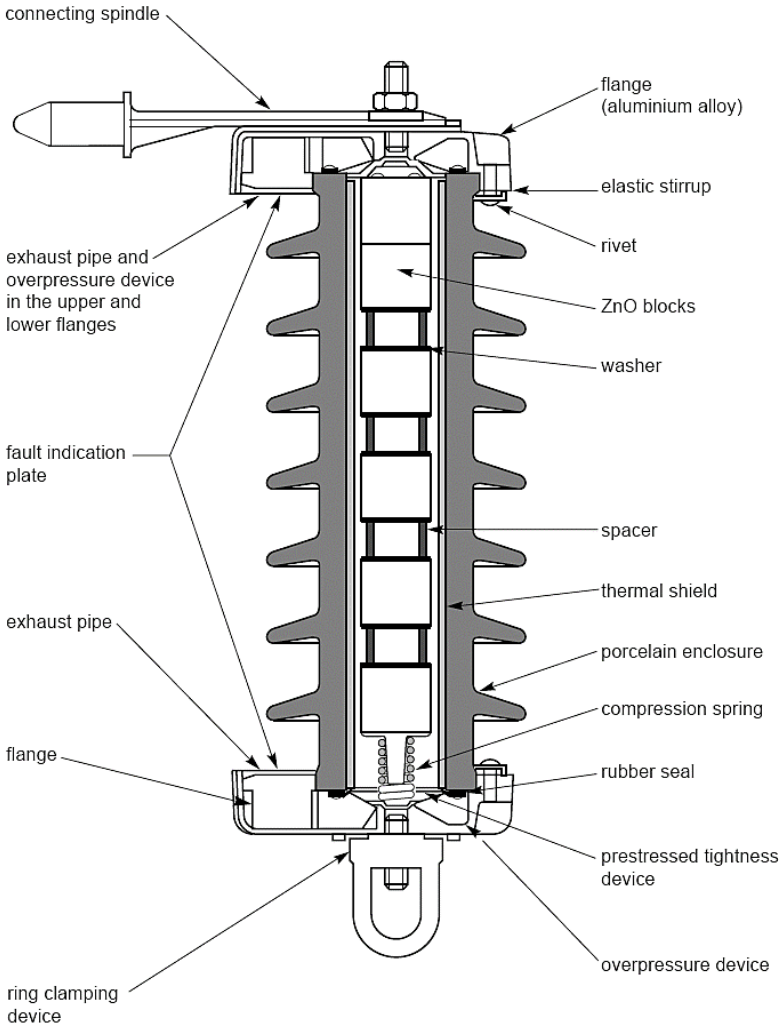

End of Webinar 4

Any questions or comments?