Professional Certificate of Competency in Electrical Power System Fundamentals for Non-Electrical Engineers

Webinar 6

Module 7: Power System Protection and Electrical Safety

Module 7 Topics

- Protection system basics including relays
- Arc flash hazards and arc flash mitigation
- Safety through better design, installation and training
- Compliance with organisational policy and safety legislation

Need for Protection

- Protection is applied to power systems in order to maintain safe and economic operability of all equipment.
- Equipment and personnel shall be protected to avoid:
  - Electric shocks
  - Electrical burns
  - Arc blast injuries
  - Fire
- Protection **does not prevent** faults from occurring on the system. It attempts to *minimise the effects* once a fault has developed.

Protection Relay

A *device* that detects fault and initiates operation of circuit breaker to isolate defective element from rest of system.

- Detects abnormal condition in electrical circuits by constantly measuring electrical quantities.
- Electrical quantities that may change under fault conditions – voltage, current, frequency, and phase angle.
- Having detected a fault, relay operates to trip the breaker – results in disconnection of faulty circuit.

Main Qualities of a Protection Relay

The 4Ss of protection:

1. **S**electivity: To detect and isolate the faulty item only.
2. **S**tability: To leave all healthy circuits intact to ensure continuity of supply.
3. **S**ensitivity: To detect even the smallest fault, current or system abnormalities and operate correctly at its setting before fault causes irreparable damage.
4. **S**peed: To operate speedily when it is called upon to do so, thereby minimising damage to the surroundings and ensuring safety.

The Two Basic Protection Types

1. Definite Minimum Time (DMT):

- Operates when measured parameter exceeds set value
- A fixed operating interval

2. Inverse Definite Minimum Time (IDMT):

- Higher the input faster operation and vice versa
- Corresponds to the thermal withstand of equipment

Characteristic of IDMT Relay

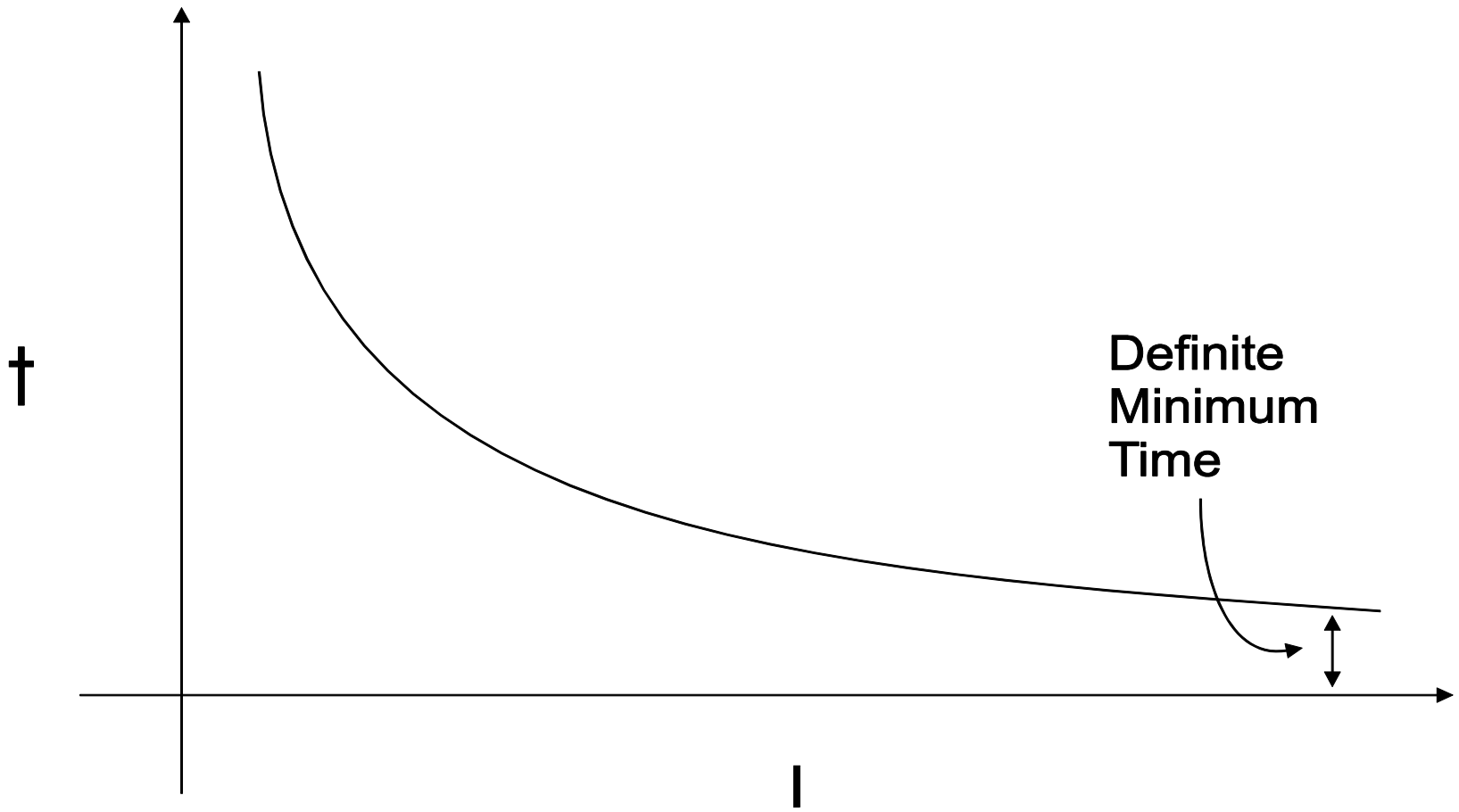

DMT and IDMT

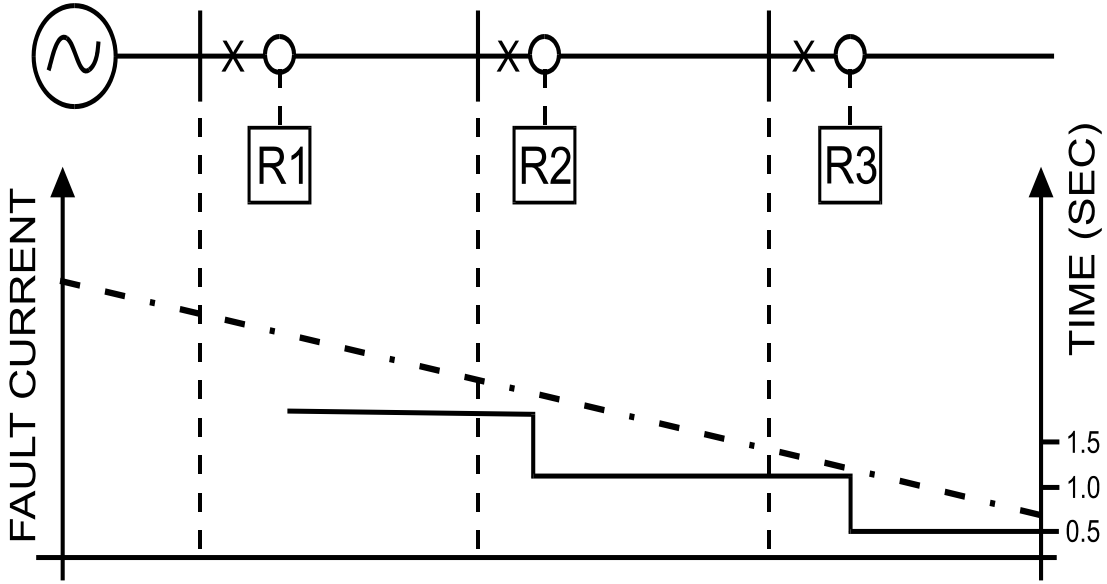
R1
R2
R3
FAULT CURRENT
TIME (SEC)
1.5
1.0
0.5

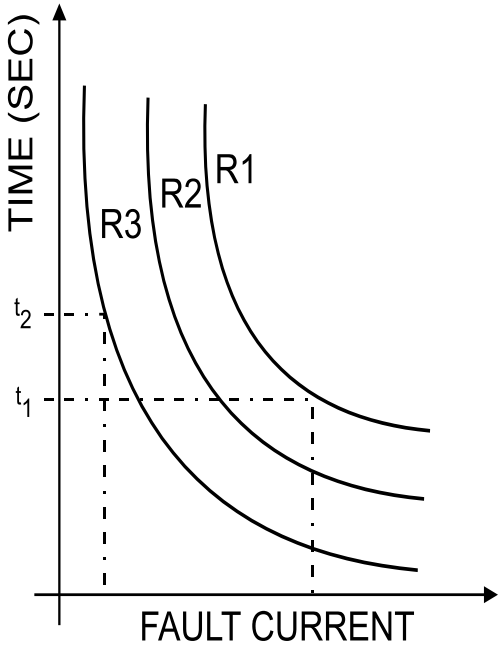
TIME (SEC)
R3
R2
R1
t_2
t_1
FAULT CURRENT

What is an Arc?

A short circuit between a live terminal and earth initiates an arc when the conductors involved melt or are otherwise separated.

- The current continues through the plasma formed by the vapor of the conductor material of the terminals involved.
- Once started, an arc sustains itself, even if the source is removed or isolated.

Impact of Arc on Humans

- Arcs can be fatal at 5 feet and less
- Major burns between 5 and 10 feet distance

Image: https://marinatextil.com/news/ratings-atpv-ebt-electric-arc-flash-protection

Arc's Damage Potential

- Direct and secondary burns due to intense heat
- Vision and hearing injuries
- Pressure wave and internal injuries
- Molten metal as projectile
- Shrapnel effect of loose parts
- Blinding light
- Toxic smoke
- Contact with energized components

Dangers from Arc

- Injuries including burns
- Damage to equipment
- Fire (if flammable substances are in the vicinity)
- Level of hazard depends on:
  - Arc energy (a function of short circuit level)
  - Time of arc persisting

Incident Energy

The **amount of energy impressed on a surface**, a certain distance from the source, generated during an electrical arc event.

Incident energy is measured in calories per centimeter squared (cal/cm^2) or joules per centimeter squared (J/cm^2)

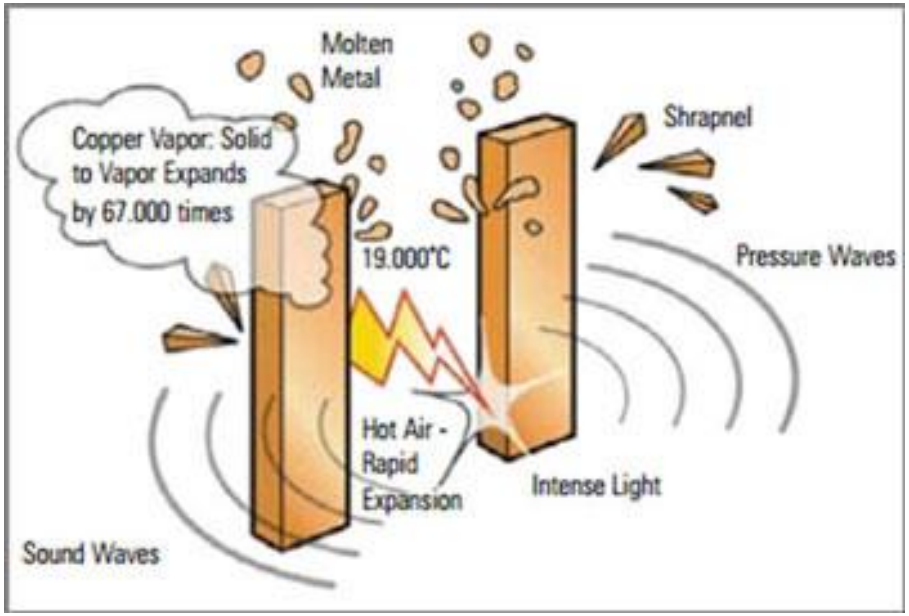

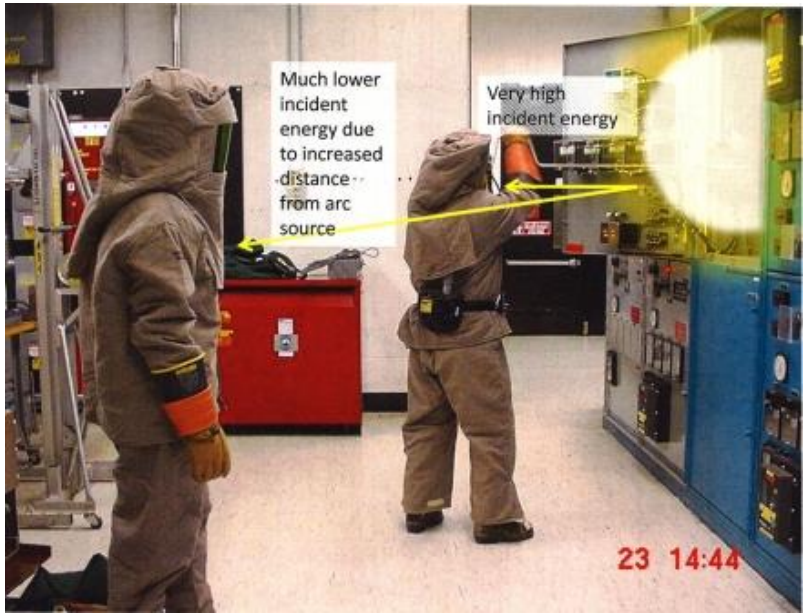

Working Distance

- The dimension between the possible arc point and the head and body of the worker positioned in place to perform the assigned task
- If working closer than flash-protection boundary, use suitable PPE rated for the incident energy as one risk control
- There could be other controls in hierarchy of controls, so PPE is the last line of defence.

Reasons Leading to Arc Flash in Metal Clad Switchgear

- Corrosion/erosion and increased contact resistance
- Contamination
- Condensation
- Spark due to accidental touching
- Dropping of tools/operating handles
- Over voltage across narrow gap
- Failure of insulating materials
- Improperly designed/operated equipment
- Inadequate safety procedures
- Entry of rodents/reptiles in energised compartments

Hazard Control for Arc Flash

- Eliminate arc events (by preventive measures)
- Substitute (SF_6 instead of air as insulation)
- Isolate/engineer (design the equipment to avoid injury by containing or reducing energy release)
- Evolve procedures to control arc hazards
- Use PPE which can withstand arc events

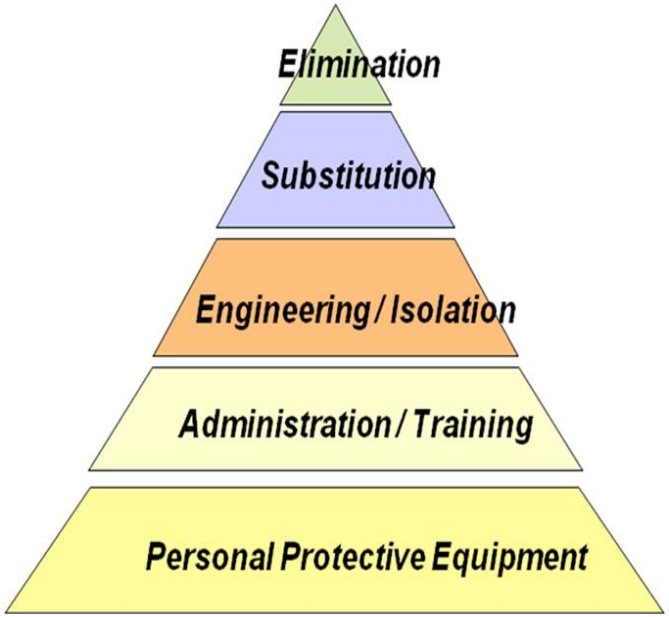

Arc Flash Protection Program

- Arc flash hazard assessment
- Documentation
- Personal protective equipment (PPE) plan
- Development of procedures to minimise hazard
- Training for workers
- Continuous improvement
- Safety audit
- Corporate-wide arc safety plan

Preventing Arc Flash Hazards

By '**Elimination Technique**', i.e. proper materials, proper operation and maintenance:

- Block entry of rodents and reptiles
- Use corrosion resistant terminals
- Heating of cable insulation can damage insulation (do regular checks using a thermograph)
- Insulate exposed metal parts
- Make sure relays and breakers operate properly
- When fuses melt, make sure that the fault has cleared before installing new fuses
- Check for excessive moisture on insulating surface of equipment

Care While Working on Electrical Equipment

- It is always preferable to work on de-energised equipment, regardless of the hazard risk category (HRC). In extreme cases, work on live equipment may be needed. In all circumstances adopt below practices:
  - **Use insulated tools:** Dropping of tools can cause momentary fault, spark and arcs.
  - **Torque control:** When using spanners, wrenches or screwdrivers to fasten or loosen a connection, use the appropriate torque. When excessive force is required, it is not uncommon to loose control.
  - Do not use paint, cleaning chemicals, spray, etc., on live exposed metal parts. The fumes or spray may be conductive and it may reduce the insulating property of air and allow an arc to strike through.

Reducing Arc Flash Exposure

Avoid arc flash accidents by:

- Proper design:
  - use of panels complying with Internal Arc Classification (IAC)
- Preventive maintenance
- Safe O&M practices
- Not working on live equipment unless specifically permitted
- Reducing the level of arc energy released:
  - By reduction of fault current
  - Fast acting protection – reduce exposure time

Arc Containment and Verification

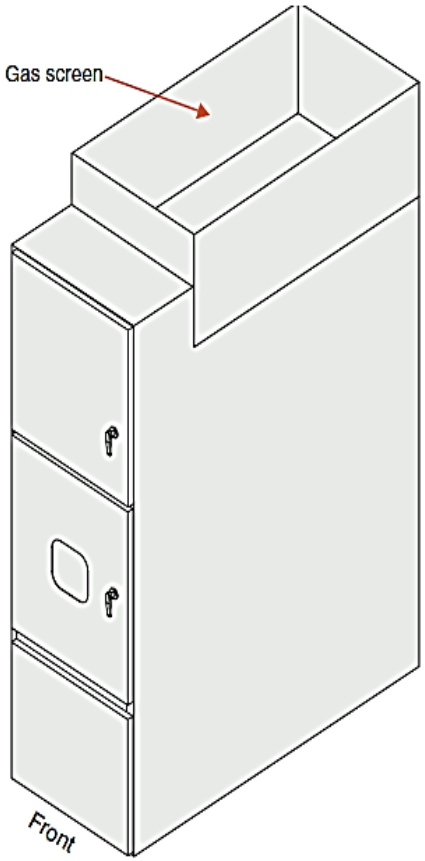

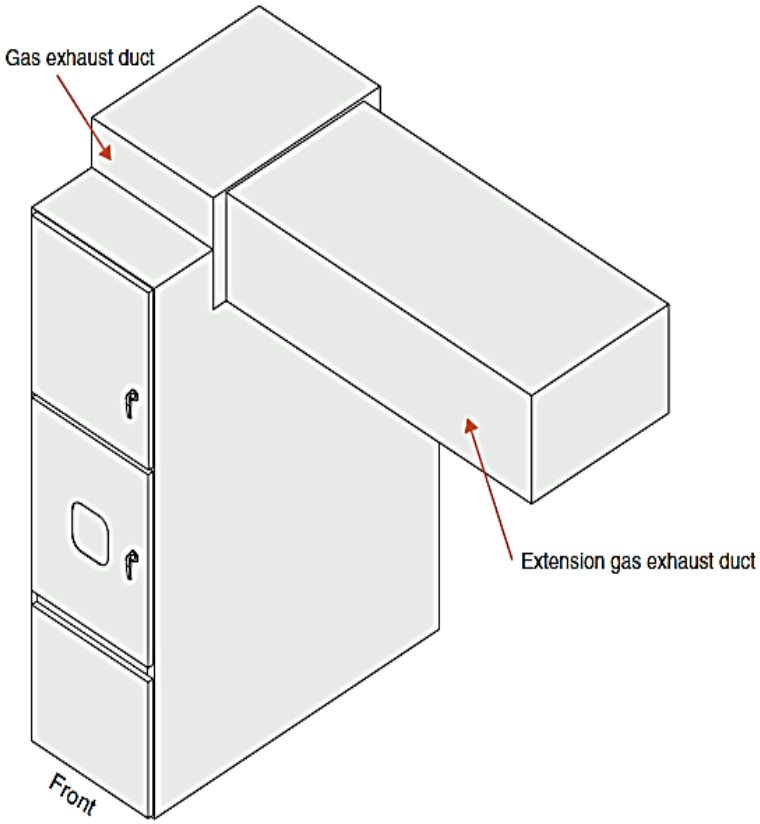

Reducing Incident Energy on Worker

- Reduce the fault level
- Reduce the exposure time
- Remote operation (increasing the working distance)
- Properly rated PPE

Increasing the Working Distance

Incident energy is inversely proportional to the square of the distance.

Working distance can be increased by:

- Using remote racking devices (now available for MV and LV breakers in metal enclosed switchgear)
- Remote operating devices (avoid local control)
- By use of extension tools

Reducing Arcing Time

- Use instantaneous trip setting during work
- Use optical sensor to trip breaker in the event of arc flash
- Use smaller fuse size where possible
- Use protective device coordination study to reduce arc flash hazard

Precautions

- Arc flash labeling mandated as per applicable standards and codes:
  - individual and group labels are permitted
- Using PPE as indicated in the labels:
  - PPE is rated based on the incident thermal energy calculated by an arc flash study

PPE Class	Incident Energy Range (cal/cm2)	Min PPE Rating (cal/cm2)	Clothing Description
0	0-2	N/A	Untreated Cotton
1	2-5	5	FR Shirt&Pants
2	5-8	8	FR Underwear+FR shirts & Pants
3	8-25	25	Cotton Underwear+FR shirts & Pants
4	25-40	40	Cotton Underwear+FR Shirt & Pant FR Coverall
5	40-100	100	Cotton underclothing plus FR shirt, pants, plus multi-layer switching suit

Typical Warning Label

PILBARA IRON
PARABURDOO

Equipment:	Feeder XX
Location:	XX-YY-ZZ
Arc Fault Level:	22kA for 0.28sec
Calc Ref:	XYZ-01
Date:	28-02-08
By:	P.Willis
Company:	DIgSILENT Pacific

VALID UNTIL 01-02-2013

DANGER

ARC FLASH and SHOCK HAZARD

11,000 VAC	Shock Hazard when cover opened
2.20 m	Arc Flash Boundary
28 cal/cm^2	Incident Energy

	PPE Category	
ACTIVITY	Door OPENED	Door CLOSED
SWITCHING		Cat 2
RACKING	Cat 4	Cat 2
ELECTRICAL WORK		
HV TESTING	Cat 4	
APPLYING PORTABLE EARTHS	Cat 4	
VISUAL INSPECTION	Cat 2	Cat 0

Preventing Electric Shock

Prevent direct contact by:

- Appropriate insulation
- Barriers/enclosure
- Obstacles
- Placing live parts beyond reach

Minimise severity of indirect contact by:

- Limiting the voltage of contact (touch/step/transferred) by proper earthing methods
- Limiting the time of contact
- Limiting current flow through the body by PPE

Legislation Dealing with Safety at Work

Three tiers:

1. Act
2. Regulation
3. Code of Practice

Acts and Regulations are mandatory and enforceable by law.

Examples:

- WHS Act
- Electricity Supply Regulation

Salient Legislative Requirements

Reasonable measures must be taken by an employer to ensure safety:

- **Technical** measures:
  - Safety in equipment design
  - Selection/Installation of equipment as per safety norms
  - Safety measures during operation

- **Organisational** measures:
  - Preparing a written safety policy and its implementation
  - Risk assessment, risk management and control measures
  - Training on safety

Safety Policy Contents

A general statement which acknowledges the employer's legal responsibility for safety.

- Specific roles of staff responsible for implementing the policy and their duties.
- An outline of procedures for ensuring safety in the workplace covering:
  - Permit-to-work and permit-release (shut down) procedures
  - Use of personal protective equipment
  - Safe handling of substances
  - Fire prevention/control/personnel evacuation
  - First aid in the event of accidents
  - Accident reporting

Employer's Responsibilities

- Assessing the risks in workplace and recording any significant risks arising out of this assessment
- Adopting the required safety measures to minimise risks including measures for fire safety
- Assessing the requirements for personal protection equipment for controlling of risks and providing/maintaining the same
- Assessing the requirements for first aid, evolving procedures for first aid
- Setting up a first aid post, training of employees in administration of first aid
- Organising safety committees to supervise the implementation of safety policy
- Providing training to employees in safety policy and procedures

End of Webinar 6

Any questions or comments?