AS 62053.21:2018

Australian STANDARD

Electricity metering equipment (ac)—Particular requirements

Part 21: Static meters for active energy (classes 1 and 2) (IEC 62053-21:2016 (ED.1.1) MOD)

STANDARDS Australia

Copyrighted material licensed by SAI Global POWERCOR. Accessed on 2020-03-02.
Reproduction,distribution,storage or use on a network is prohibited.

This Australian Standard® was prepared by Committee EL-011, Electricity Metering Equipment. It was approved on behalf of the Council of Standards Australia on 18 November 2018.
This Standard was published on 21 December 2018.

The following are represented on Committee EL-011:

- Australian Chamber of Commerce and Industry
- Australian Energy Council
- Australian Energy Market Operator
- Australian Industry Group
- Consumers Federation of Australia
- Electrical Regulatory Authorities Council
- Energy Networks Australia
- National Electrical and Communications Association
- National Measurement Institute

This Standard was issued in draft form for comment as DR AS 62053.21:2018.

Standards Australia wishes to acknowledge the participation of the expert individuals that contributed to the development of this Standard through their representation on the Committee and through the public comment period.

Keeping Standards up-to-date

Australian Standards® are living documents that reflect progress in science, technology and systems. To maintain their currency, all Standards are periodically reviewed, and new editions are published. Between editions, amendments may be issued.

Standards may also be withdrawn. It is important that readers assure themselves they are using a current Standard, which should include any amendments that may have been published since the Standard was published.

Detailed information about Australian Standards, drafts, amendments and new projects can be found by visiting **www.standards.org.au**

Standards Australia welcomes suggestions for improvements, and encourages readers to notify us immediately of any apparent inaccuracies or ambiguities. Contact us via email at **mail@standards.org.au**, or write to Standards Australia, GPO Box 476, Sydney, NSW 2001.

Copyrighted material licensed by SAI Global POWERCOR. Accessed on 2020-03-02.
Reproduction,distribution,storage or use on a network is prohibited.

Australian Standard®

Electricity metering equipment (ac)—Particular requirements

Part 21: Static meters for active energy (classes 1 and 2) (IEC 62053-21:2016 (ED.1.1) MOD)

Originated as AS 1284.5—1992.
Revised and redesignated as AS 62053.21—2005.
This edition 2018.

COPYRIGHT

© Standards Australia Limited

All rights are reserved. No part of this work may be reproduced or copied in any form or by any means, electronic or mechanical, including photocopying, without the written permission of the publisher, unless otherwise permitted under the Copyright Act 1968.

Published by SAI Global Limited under licence from Standards Australia Limited, GPO Box 476, Sydney, NSW 2001, Australia

ISBN 978 1 76072 294 4

Copyrighted material licensed by SAI Global POWERCOR. Accessed on 2020-03-02.
Reproduction,distribution,storage or use on a network is prohibited.

PREFACE

This Standard was prepared by the Standards Australia Committee EL-011, Electricity Metering Equipment to supersede AS 62053.21—2005, *Electricity metering equipment (AC) – Particular requirements – Part 21: Static meters for active energy (classes 1 and 2) (IEC 62053-21 Ed.1.0 (2003) MOD)*.

The objective of this Standard is to communicate to users, and also provide manufacturers with the particular requirements for class 1 and 2 active energy static meters intended for use in Australia.

This Standard is an adoption with national modifications and has been reproduced from IEC 62053-21:2013 + A1:2016 CSV (ED.1.1), *Electricity metering equipment (a.c.) – Particular requirements – Part 21: Static meters for active energy (classes 1 and 2)*. 'CSV' stands for 'consolidated version' whereby IEC Amendment 1:2016 has been incorporated into the source text.

The Australian variations to the IEC source text are listed in Appendix ZZ.

This Standard is structured as follows:

(a) Preface.

(b) IEC 62053-21:2016, (ED.1.1) (unedited from the Contents page to the final clause of the source document).

(c) Appendix ZZ containing variations to IEC 62053-21:2016 (ED.1.1) for application in Australia.

As this Standard is reproduced from an International Standard, the following applies:

(i) In the source text 'this part of IEC 62053' should read 'this Australian Standard'.

(ii) A full point should be substituted for a comma when referring to a decimal marker.

Australian or Australian/New Zealand Standards that are identical adoptions of international normative references may be used interchangeably. Refer to the online catalogue for information on specific Standards.

The terms 'normative' and 'informative' have been used in this Standard to define the application of the annex or appendix to which they apply. A 'normative' annex or appendix is an integral part of a Standard, whereas an 'informative' annex or appendix is for information and guidance only.

This Standard belongs to the programme of adoptions of IEC 62052 and IEC 62053 series Standards on electricity metering equipment. Existing adoptions have been updated and a new Part (AS 62053.24) in the series has been added. The current adoptions comprise the following:

AS 62052.11 (Metering equipment). Modified adoption of IEC 62052-11:2016 (ED.1.1).

AS 62052.21 (Tariff and load control). Modified adoption of IEC 62052-21:2016 (ED.1.1).

AS 62052.31 (Product safety). Modified adoption of IEC 62052-31:2016 (ED.1.0).

AS 62053.21 (Class 1/2 kWh). Modified adoption of IEC 62053-21:2016 (ED.1.1) (this Standard).

AS 62053.22 (Class 0.2/0.5 kWh). Modified adoption of IEC 62053-22:2016 (ED.1.1).

AS 62053.23 (Class 2/3 kvarh). Modified adoption of IEC 62053-23:2016 (ED.1.1).

AS 62053.24 (Class 1.0/0.5 kvarh). Modified adoption of IEC 62053-24:2016 (ED.1.1).

Copyrighted material licensed by SAI Global POWERCOR. Accessed on 2020-03-02.
Reproduction,distribution,storage or use on a network is prohibited.

NOTES

Copyrighted material licensed by SAI Global POWERCOR. Accessed on 2020-03-02.
Reproduction,distribution,storage or use on a network is prohibited.

CONTENTS

FOREWORD 4
INTRODUCTION 6
INTRODUCTION TO AMENDMENT 1 7
1 Scope 8
2 Normative references 8
3 Terms and definitions 9
4 Standard electrical values 9
5 Mechanical requirements 9
6 Climatic conditions 9
7 Electrical requirements 9
7.1 Power consumption 9
7.2 Influence of short-time overcurrents 10
7.3 Influence of self-heating 10
7.4 AC voltage test 11
8 Accuracy requirements 11
8.1 Limits of error due to variation of the current 11
8.2 Limits of error due to influence quantities 12
8.3 Test of starting and no-load condition 14
8.4 Meter constant 15
8.5 Accuracy test conditions 16
8.6 Interpretation of test results 17
Annex A (normative) Test circuit diagram for d.c., even harmonics, odd harmonics and sub-harmonics 18
Annex B (normative) Electromagnet for testing the influence of externally produced magnetic fields 24
Bibliography 25

Figure A.1 – Test circuit diagram for half-wave rectification 18
Figure A.2 – Half-wave rectified waveform 19
Figure A.3 – Informative distribution of half-wave harmonic content (the Fourier analysis is not complete) 20
Figure A.4 – Test circuit diagram (informative) 21
Figure A.5 – Phase fired waveform 22
Figure A.6 – Informative distribution of harmonic content of phase fired waveform (the Fourier analysis is not complete) 22
Figure A.7 – Burst fired waveform 23
Figure A.8 – Informative distribution of harmonics (the Fourier analysis is not complete) 23
Figure B.1 – Electromagnet for testing the influence of externally produced magnetic fields 24

Table 1 – Power consumption in voltage circuits for single-phase and polyphase meters including the power supply 9
Table 2 – Power consumption in current circuits 10
Table 3 – Variations due to short-time overcurrents 10

Copyrighted material licensed by SAI Global POWERCOR. Accessed on 2020-03-02.
Reproduction,distribution,storage or use on a network is prohibited.

Table 4 – Variations due to self-heating 11
Table 6 – Percentage error limits (single-phase meters and polyphase meters with balanced loads) 11
Table 7 – Percentage error limits (polyphase meters carrying a single-phase load, but with balanced polyphase voltages applied to voltage circuits) 12
Table 8 – Influence quantities 12
Table 8 (*continued*) 13
Table 9 – Starting current 15
Table 10 – Voltage and current balance 16
Table 11 – Reference conditions 16
Table 11 *(continued)* 17
Table 12 – Interpretation of test results 17

Copyrighted material licensed by SAI Global POWERCOR. Accessed on 2020-03-02.
Reproduction,distribution,storage or use on a network is prohibited.

FOREWORD

1) The International Electrotechnical Commission (IEC) is a worldwide organization for standardization comprising all national electrotechnical committees (IEC National Committees). The object of IEC is to promote international co-operation on all questions concerning standardization in the electrical and electronic fields. To this end and in addition to other activities, IEC publishes International Standards, Technical Specifications, Technical Reports, Publicly Available Specifications (PAS) and Guides (hereafter referred to as "IEC Publication(s)"). Their preparation is entrusted to technical committees; any IEC National Committee interested in the subject dealt with may participate in this preparatory work. International, governmental and non-governmental organizations liaising with the IEC also participate in this preparation. IEC collaborates closely with the International Organization for Standardization (ISO) in accordance with conditions determined by agreement between the two organizations.
2) The formal decisions or agreements of IEC on technical matters express, as nearly as possible, an international consensus of opinion on the relevant subjects since each technical committee has representation from all interested IEC National Committees.
3) IEC Publications have the form of recommendations for international use and are accepted by IEC National Committees in that sense. While all reasonable efforts are made to ensure that the technical content of IEC Publications is accurate, IEC cannot be held responsible for the way in which they are used or for any misinterpretation by any end user.
4) In order to promote international uniformity, IEC National Committees undertake to apply IEC Publications transparently to the maximum extent possible in their national and regional publications. Any divergence between any IEC Publication and the corresponding national or regional publication shall be clearly indicated in the latter.
5) IEC itself does not provide any attestation of conformity. Independent certification bodies provide conformity assessment services and, in some areas, access to IEC marks of conformity. IEC is not responsible for any services carried out by independent certification bodies.
6) All users should ensure that they have the latest edition of this publication.
7) No liability shall attach to IEC or its directors, employees, servants or agents including individual experts and members of its technical committees and IEC National Committees for any personal injury, property damage or other damage of any nature whatsoever, whether direct or indirect, or for costs (including legal fees) and expenses arising out of the publication, use of, or reliance upon, this IEC Publication or any other IEC Publications.
8) Attention is drawn to the Normative references cited in this publication. Use of the referenced publications is indispensable for the correct application of this publication.
9) Attention is drawn to the possibility that some of the elements of this IEC Publication may be the subject of patent rights. IEC shall not be held responsible for identifying any or all such patent rights.

DISCLAIMER
This Consolidated version is not an official IEC Standard and has been prepared for user convenience. Only the current versions of the standard and its amendment(s) are to be considered the official documents.

This Consolidated version of IEC 62053-21 bears the edition number 1.1. It consists of the first edition (2003-01) [documents 13/1282/FDIS and 13/1289/RVD] and its amendment 1 (2016-11) [documents 13/1699/FDIS and 13/1713/RVD]. The technical content is identical to the base edition and its amendment.

This Final version does not show where the technical content is modified by amendment 1. A separate Redline version with all changes highlighted is available in this publication.

Copyrighted material licensed by SAI Global POWERCOR. Accessed on 2020-03-02.
Reproduction,distribution,storage or use on a network is prohibited.

International Standard IEC 62053-21 has been prepared by IEC technical committee 13: Equipment for electrical energy measurement and load control.

This publication has been drafted in accordance with the ISO/IEC Directives, Part 2.

The committee has decided that the contents of the base publication and its amendment will remain unchanged until the stability date indicated on the IEC web site under "http://webstore.iec.ch" in the data related to the specific publication. At this date, the publication will be

- reconfirmed,
- withdrawn,
- replaced by a revised edition, or
- amended.

NOTE The attention of National Committees is drawn to the fact that equipment manufacturers and testing organizations may need a transitional period following publication of a new, amended or revised IEC publication in which to make products in accordance with the new requirements and to equip themselves for conducting new or revised tests.

It is the recommendation of the committee that the content of this publication be adopted for implementation nationally not earlier than 2 years from the date of publication.

Copyrighted material licensed by SAI Global POWERCOR. Accessed on 2020-03-02.
Reproduction,distribution,storage or use on a network is prohibited.

INTRODUCTION

This part of IEC 62053 is to be used with the following relevant parts of the IEC 62052, IEC 62053 and IEC 62059 series, Electricity metering equipment:

IEC 62052-11:2003, *Electricity metering equipment (AC) – General requirements, tests and test conditions – Part 11: Metering equipment*
Amendment 1 (2016)

IEC 62052-31:2015, *Electricity metering equipment (AC) – General requirements, tests and test conditions – Part 31: Product safety requirements and tests*

IEC 62053-11:2003, *Electricity metering equipment (a.c.) – Particular requirements – Part 11: Electromechanical meters for active energy (classes 0,5, 1 and 2)* Replaces particular requirements of IEC 60521: 1988 (2nd edition)

IEC 62053-22:2003, *Electricity metering equipment (a.c.) – Particular requirements – Part 22: Static meters for active energy (classes 0,2 S and 0,5 S)* Replaces particular requirements of IEC 60687: 1992 (2nd edition)

IEC 62053-23:2003, *Electricity metering equipment (AC) – Particular requirements – Part 23: Static meters for reactive energy (classes 2 and 3)*

IEC 62053-24:2014, *Electricity metering equipment (a.c.) – Particular requirements – Part 24: Static meters for reactive energy at fundamental frequency (classes 0,5 S, 1S and 1)*

IEC 62053-31:1998, *Electricity metering equipment (a.c.) – Particular requirements – Part 31: Pulse output devices for electromechanical and electronic meters (two wires only)*

IEC 62053-61:1998, *Electricity metering equipment (a.c.) – Particular requirements – Part 61: Power consumption and voltage requirements*

IEC 62059-11:2002, *Electricity metering equipment (a.c.) – Dependability – Part 11: General concepts*

IEC 62059-21:2002, *Electricity metering equipment (a.c.) – Dependability – Part 21: Collection of meter dependability data from the field*

This part is a standard for type testing electricity meters. It covers the particular requirements for meters, being used indoors and outdoors in large quantities worldwide. It does not deal with special implementations (such as metering-part and/or displays in separate housings).

This standard is intended to be used in conjunction with IEC 62052-11. When any requirement in this standard concerns an item already covered in IEC 62052-11, the requirements of this standard take precedence over the requirements of IEC 62052-11.

This standard distinguishes:

– between accuracy class index 1 and accuracy class index 2 meters;
– between protective class I and protective class II meters;
– between meters for use in networks equipped with or without earth fault neutralizers.

The test levels are regarded as minimum values that provide for the proper functioning of the meter under normal working conditions. For special application, other test levels might be necessary and should be agreed on between the user and the manufacturer.

Copyrighted material licensed by SAI Global POWERCOR. Accessed on 2020-03-02.
Reproduction,distribution,storage or use on a network is prohibited.

INTRODUCTION TO AMENDMENT 1

The purpose of this amendment is to identify and remove all safety related requirements and tests of IEC 62053-21:2003 that are replaced and extended by the complete set of requirements and tests in IEC 62052-31:2015.

Copyrighted material licensed by SAI Global POWERCOR. Accessed on 2020-03-02.
Reproduction,distribution,storage or use on a network is prohibited.

AUSTRALIAN STANDARD

Electricity metering equipment (ac)—Particular requirements

Part 21:
Static meters for active energy (classes 1 and 2)
(IEC 62053-21:2016 (ED.1.1) MOD)

1 Scope

This part of IEC 62053 applies only to newly manufactured static watt-hour meters of accuracy classes 1 and 2, for the measurement of alternating current electrical active energy in 50 Hz or 60 Hz networks and it applies to their type tests only.

It applies only to static watt-hour meters for indoor and outdoor application consisting of a measuring element and register(s) enclosed together in a meter case. It also applies to operation indicator(s) and test output(s). If the meter has a measuring element for more than one type of energy (multi-energy meters), or when other functional elements, like maximum demand indicators, electronic tariff registers, time switches, ripple control receivers, data communication interfaces, etc. are enclosed in the meter case, then the relevant standards for these elements also apply.

It does not apply to:

– watt-hour meters where the voltage across the connection terminals exceeds 600 V (line-to-line voltage for meters for polyphase systems);
– portable meters;
– data interfaces to the register of the meter;
– reference meters.

The safety aspect is covered by IEC 62052-31:2015.

Regarding acceptance tests, see IEC 62058-11:2008 and IEC 62058-31:2008.

The dependability aspect is covered by the standards of the IEC 62059 series.

2 Normative references

The following referenced documents are indispensable for the application of this document. For dated references, only the edition cited applies. For undated references, the latest edition of the referenced document (including any amendments) applies.

IEC 62052-11:2003, *Electricity metering equipment (AC) – General requirements, tests and test conditions – Part 11: Metering equipment*
Amendment 1 (2016)

IEC 62052-31:2015, *Electricity metering equipment (AC) – General requirements, tests and test conditions – Part 31: Product safety requirements and tests*

IEC 62053-61:1998, *Electricity metering equipment (a.c.) – Particular requirements – Part 61: Power consumption and voltage requirements*

Copyrighted material licensed by SAI Global POWERCOR. Accessed on 2020-03-02.
Reproduction,distribution,storage or use on a network is prohibited.

3 Terms and definitions

For the purposes of this document, the terms and definitions given in IEC 62052-11 apply.

4 Standard electrical values

The values given in IEC 62052-11 apply.

5 Mechanical requirements

The requirements of IEC 62052-11 apply.

6 Climatic conditions

The conditions given in IEC 62052-11 apply.

7 Electrical requirements

In addition to the electrical requirements in IEC 62052-11, meters shall fulfil the following requirements.

7.1 Power consumption

The power consumption in the voltage and current circuit shall be determined at reference conditions given in 8.5 by any suitable method. The overall maximum error of the measurement of the power consumption shall not exceed 5 %.

7.1.1 Voltage circuits

The active and apparent power consumption in each voltage circuit of a meter at reference voltage, reference temperature and reference frequency shall not exceed the values shown in Table 1.

Table 1 – Power consumption in voltage circuits for single-phase and polyphase meters including the power supply

Meters	Power supply connected to the voltage circuits	Power supply not connected to the voltage circuits
Voltage circuit	2 W and 10 VA	0.5 VA
Auxiliary power supply	–	10 VA

NOTE 1 In order to match voltage transformers to meters, the meter manufacturer should state whether the burden is inductive or capacitive (for transformer operated meters only).

NOTE 2 The above figures are mean values. Switching power supplies with peak power values in excess of these specified values are permitted, but it should be ensured that the rating of associated voltage transformers is adequate.

NOTE 3 For multifunctional meters see IEC 62053-61.

7.1.2 Current circuits

The apparent power taken by each current circuit of a direct connected meter at basic current, reference frequency and reference temperature shall not exceed the values shown in Table 2.

Copyrighted material licensed by SAI Global POWERCOR. Accessed on 2020-03-02.
Reproduction,distribution,storage or use on a network is prohibited.

The apparent power taken by each current circuit of a meter connected through a current transformer shall not exceed the value shown in Table 2 at a current value that equals the rated secondary current of the corresponding transformer at reference temperature and reference frequency of the meter.

Table 2 – Power consumption in current circuits

Meters	Class of meter	
	1	2
Single-phase and polyphase	4,0 VA	2,5 VA

NOTE 1 The rated secondary current is the value of the secondary current indicated on the current transformer, on which the performance of the transformer is based. Standard values of maximum secondary current are 120 %, 150 % and 200 % of the rated secondary current.

NOTE 2 In order to match current transformers to meters, the meter manufacturer should state whether the burden is inductive or capacitive (for transformer operated meters only).

7.2 Influence of short-time overcurrents

Short-time overcurrents shall not damage the meter. The meter shall perform correctly when back to its initial working condition and the variation of error shall not exceed the values shown in Table 3.

The test circuit shall be practically non-inductive and the test shall be performed for polyphase meters phase-by-phase.

After the application of the short-time overcurrent with the voltage maintained at the terminals, the meter shall be allowed to return to the initial temperature with the voltage circuit(s) energized (about 1 h).

a) Meter for direct connection

The meter shall be able to carry a short-time overcurrent of 30 I_{max} with a relative tolerance of +0 % to –10 % for one half-cycle at rated frequency.

b) Meter for connection through current transformer

The meter shall be able to carry for 0,5 s a current equal to 20 I_{max} with a relative tolerance of +0 % to –10 %.

NOTE This requirement does not apply to meters having a contact in the current circuits. For this case, see appropriate standards.

Table 3 – Variations due to short-time overcurrents

Meters for	Value of current	Power factor	Limits of variations in percentage error for meters of class	
			1	2
Direct connection	I_b	1	1,5	1,5
Connection through current transformers	I_n	1	0,5	1,0

In addition to the existing requirements and tests covering the metrology aspect, safety related requirements specified in IEC 62052-31:2015, 6.9.8 and tests specified in 6.10.5 and 6.10.6 apply.

7.3 Influence of self-heating

The variation of error due to self-heating shall not exceed the values given in Table 4.

Copyrighted material licensed by SAI Global POWERCOR. Accessed on 2020-03-02.
Reproduction,distribution,storage or use on a network is prohibited.

Table 4 – Variations due to self-heating

Value of current	Power factor	Limits of variations in percentage error for meters of class	
		1	2
I_{max}	1	0,7	1,0
	0,5 inductive	1,0	1,5

The test shall be carried out as follows: after the voltage circuits have been energized at reference voltage for at least 2 h for class 1 and 1 h for class 2, without any current in the current circuits, the maximum current shall be applied to the current circuits. The meter error shall be measured at unity power factor immediately after the current is applied and then at intervals short enough to allow a correct drawing to be made of the curve of error variation as a function of time. The test shall be carried out for at least 1 h, and in any event until the variation of error during 20 min does not exceed 0,2 %.

The same test shall then be carried out at 0,5 (inductive) power factor.

Test cables shall be as specified in IEC 62052-31:2015, *4.3.2.11.*

7.4 AC voltage test

IEC 62052-31:2015, 6.10.4.3.4 applies.

8 Accuracy requirements

Tests and test conditions given in IEC 62052-11 apply.

8.1 Limits of error due to variation of the current

When the meter is under the reference conditions given in 8.5, the percentage errors shall not exceed the limits for the relevant accuracy class given in Tables 6 and 7.

If the meter is designed for the measurement of energy in both directions, the values in Table 6 and Table 7 shall apply for each direction.

Table 6 – Percentage error limits (single-phase meters and polyphase meters with balanced loads)

Value of current		Power factor	Percentage error limits for meters of class	
for direct connected meters	for transformer operated meters		1	2
$0,05\ I_b \le I < 0,1\ I_b$	$0,02\ I_n \le I < 0,05\ I_n$	1	±1,5	±2,5
$0,1\ I_b \le I \le I_{max}$	$0,05\ I_n \le I \le I_{max}$	1	±1,0	±2,0
$0,1\ I_b \le I < 0,2\ I_b$	$0,05\ I_n \le I < 0,1\ I_n$	0,5 inductive	±1,5	±2,5
		0,8 capacitive	±1,5	-
$0,2\ I_b \le I \le I_{max}$	$0,1\ I_n \le I \le I_{max}$	0,5 inductive	±1,0	±2,0
		0,8 capacitive	±1,0	-
When specially requested by the user:				
From		0,25 inductive	±3,5	-
$0,2\ I_b \le I \le I_b$	$0,1\ I_n \le I \le I_n$	0,5 capacitive	±2,5	-

Copyrighted material licensed by SAI Global POWERCOR. Accessed on 2020-03-02.
Reproduction,distribution,storage or use on a network is prohibited.

Table 7 – Percentage error limits (polyphase meters carrying a single-phase load, but with balanced polyphase voltages applied to voltage circuits)

Value of current		Power factor	Percentage error limits for meters of class	
for direct connected meters	for transformer operated meters		1	2
0,1 $I_b \le I \le I_{max}$	0,05 $I_n \le I \le I_{max}$	1	± 2,0	± 3,0
0,2 $I_b \le I \le I_{max}$	0,1 $I_n \le I \le I_{max}$	0,5 inductive	± 2,0	± 3,0

The difference between the percentage error when the meter is carrying a single-phase load and a balanced polyphase load at basic current I_b and unity power factor for direct connected meters, respectively at rated current I_n and unity power factor for transformer operated meters, shall not exceed 1,5 % and 2,5 % for meters of classes 1 and 2 respectively.

NOTE When testing for compliance with Table 7, the test current should be applied to each measuring element in sequence.

8.2 Limits of error due to influence quantities

The additional percentage error due to the change of influence quantities with respect to reference conditions, as given in 8.5, shall not exceed the limits for the relevant accuracy class given in Table 8.

Table 8 – Influence quantities

Influence quantity	Value of current (balanced unless otherwise stated)		Power factor	Mean temperature coefficient %/K for meters of class	
	for direct connected meters	for transformer-operated meters		1	2
Ambient temperature variation [9]	0,1 $I_b \le I \le I_{max}$ 0,2 $I_b \le I \le I_{max}$	0,05 $I_n \le I \le I_{max}$ 0,1 $I_n \le I \le I_{max}$	1 0,5 inductive	0,05 0,07	0,10 0,15
				Limits of variation in percentage error for meters of class	
				1	2
Voltage variation ±10 % [1] [8]	0,05 $I_b \le I \le I_{max}$ 0,1 $I_b \le I \le I_{max}$	0,02 $I_n \le I \le I_{max}$ 0,05 $I_n \le I \le I_{max}$	1 0,5 inductive	0,7 1,0	1,0 1,5
Frequency variation ±2 % [8]	0,05 $I_b \le I \le I_{max}$ 0,1 $I_b \le I \le I_{max}$	0,02 $I_n \le I \le I_{max}$ 0,05 $I_n \le I \le I_{max}$	1 0,5 inductive	0,5 0,7	0,8 1,0
Reversed phase sequence	0,1 I_b	0,1 I_n	1	1,5	1,5
Voltage unbalance [3]	I_b	I_n	1	2,0	4,0
Harmonic components in the current and voltage circuits [5]	0,5 I_{max}	0,5 I_{max}	1	0,8	1,0
DC and even harmonics in the a.c. current circuit [4]	$\frac{I_{max}}{\sqrt{2}}$ [2]	–	1	3,0	6,0
Odd harmonics in the a.c. current circuit [5]	0,5 I_b [2]	0,5 I_n [2]	1	3,0	6,0

Copyrighted material licensed by SAI Global POWERCOR. Accessed on 2020-03-02.
Reproduction,distribution,storage or use on a network is prohibited.

Table 8 (*continued*)

Influence quantity	Value of current (balanced unless otherwise stated)		Power factor	Limits of variation in percentage error for meters of class	
	for direct connected meters	for transformer-operated meters		1	2
Sub-harmonics in the a.c. current circuit [5]	0,5 I_b [2]	0,5 I_n [2]	1	3,0	6,0
Continuous magnetic induction of external origin [5]	I_b	I_n	1	2,0	3,0
Magnetic induction of external origin 0,5 mT [6]	I_b	I_n	1	2,0	3,0
Electromagnetic RF fields	I_b	I_n	1	2,0	3,0
Operation of accessories [7]	0,05 I_b	0,05 I_n	1	0,5	1,0
Conducted disturbances, induced by radio-frequency fields	I_b	I_n	1	2,0	3,0
Fast transient burst	I_b	I_n	1	4,0	6,0
Damped oscillatory waves immunity [10]	–	I_n	1	2,0	3,0

[1] For the voltage ranges from –20 % to –10 % and +10 % to +15 % the limits of variation in percentage errors are three times the values given in this table.

Below 0,8 U_n the error of the meter may vary between +10 % and –100 %.

[2] The distortion factor of the voltage shall be less than 1 %. For test condition see 8.2.2 and 8.2.3.

[3] Polyphase meters with three measuring elements shall measure and register, within the limits of variation in percentage error shown in this table, if the following phases are interrupted:

– in a three-phase, four wire network one or two phases;

– in a three-phase, three-wire network (if the meter is designed for this service) one of the three phases.

This only covers phase interruptions and does not cover events such as transformer fuse failures.

[4] This test does not apply to transformer-operated meters. The test conditions are specified in Clause A.1.

[5] The test conditions are specified in 8.2.1 to 8.2.4.

[6] A magnetic induction of external origin of 0,5 mT produced by a current of the same frequency as that of the voltage applied to the meter and under the most unfavourable conditions of phase and direction shall not cause a variation in the percentage error of the meter exceeding the values shown in this table.

The magnetic induction shall be obtained by placing the meter in the centre of a circular coil, 1 m in mean diameter, of square section and of small radial thickness relative to the diameter, and having 400 At.

[7] Such an accessory, when enclosed in the meter case, is energized intermittently, for example the electromagnet of a multi-rate register.

It is preferable that the connection to the auxiliary device(s) is marked to indicate the correct method of connection. If these connections are made by means of plugs and sockets, they should be irreversible.

However, in the absence of those markings or irreversible connections, the variations of errors shall not exceed those indicated in this table if the meter is tested with the connections giving the most unfavourable condition.

[8] The recommended test point for voltage variation and frequency variation is I_b for direct connected meters and I_n for transformer-operated meters.

[9] The mean temperature coefficient shall be determined for the whole operating range. The operating temperature range shall be divided into 20 K wide ranges. The mean temperature coefficient shall then be determined for these ranges, by taking measurements 10 K above and 10 K below the middle of the range. During the test, the temperature shall be in no case outside the specified operating temperature range.

[10] This test only applies to transformer-operated meters.

Copyrighted material licensed by SAI Global POWERCOR. Accessed on 2020-03-02.
Reproduction,distribution,storage or use on a network is prohibited.

Tests for variation caused by influence quantities should be performed independently with all other influence quantities at their reference conditions (see Table 11).

8.2.1 Accuracy test in the presence of harmonics

Test conditions:

- fundamental frequency current: I_1 = 0,5 I_{max}
- fundamental frequency voltage: $U_1 = U_n$
- fundamental frequency power factor: 1
- content of 5th harmonic voltage: U_5 = 10 % of U_n
- content of 5th harmonic current: I_5 = 40 % of fundamental current
- harmonic power factor: 1
- fundamental and harmonic voltages are in phase, at positive zero crossing.

Resulting harmonic power due to the 5th harmonic is P_5 = 0,1 U_1 × 0,4 I_1 = 0,04 P_1 or total active power = 1,04 P_1 (fundamental + harmonics).

8.2.2 Tests of the influence of odd harmonics and sub-harmonics

The tests of the influence of odd harmonics and sub-harmonics shall be made with the circuit shown in Figure A.4 or with other equipment able to generate the required waveforms, and the current waveforms as shown Figure A.5 and Figure A.7 respectively.

The variation in percentage error when the meter is subjected to the test waveform given in Figure A.5 and Figure A.7 and when it is subjected to the reference waveform shall not exceed the limits of variation given in Table 8.

NOTE The values given in the figures are for 50 Hz only. For other frequencies, the values have to be adapted accordingly.

8.2.3 Tests of the influence of d.c. and even harmonics

The tests of the influence of direct current and even harmonics shall be made with the circuit shown in Figure A.1 or with other equipment able to generate the required waveforms, and the current waveforms as shown in Figure A.2.

The variation in percentage error when the meter is subjected to the test waveform given in Figure A.2 and when it is subjected to the reference waveform shall not exceed the limits of variation given in Table 8.

NOTE The values given in the figures are for 50 Hz only. For other frequencies the values have to be adapted accordingly.

8.2.4 Continuous magnetic induction of external origin

The continuous magnetic induction may be obtained by using the electromagnet according to annex B, energized with a d.c. current. This magnetic field shall be applied to all accessible surfaces of the meter when it is mounted as for normal use. The value of the magneto-motive force applied shall be 1 000 At (ampere-turns).

8.3 Test of starting and no-load condition

For these tests, the conditions and the values of the influence quantities shall be as stated in 8.5 except for any changes specified below.

Copyrighted material licensed by SAI Global POWERCOR. Accessed on 2020-03-02.
Reproduction,distribution,storage or use on a network is prohibited.

8.3.1 Initial start-up of the meter

The meter shall be functional within 5 s after the reference voltage is applied to the meter terminals.

8.3.2 Test of no-load condition

When the voltage is applied with no current flowing in the current circuit, the test output of the meter shall not produce more than one pulse.

For this test, the current circuit shall be open-circuit and a voltage of 115 % of the reference voltage shall be applied to the voltage circuits.

The minimum test period Δt shall be

$$\Delta t \geq \frac{600 \times 10^6}{k\ m\ U_n\ I_{\max}} \text{ [min] for meters of class 1}$$

$$\Delta t \geq \frac{480 \times 10^6}{k\ m\ U_n\ I_{\max}} \text{ [min] for meters of class 2}$$

where

k is the number of pulses emitted by the output device of the meter per kilowatthour (imp/kW·h);

m is the number of measuring elements;

U_n is the reference voltage in volts;

I_{max} is the maximum current in amperes.

For transformer-operated meters with primary or half-primary registers, the constant k shall correspond to the secondary values (voltage and currents).

8.3.3 Starting

The meter shall start and continue to register at the starting current values (and in case of polyphase meters, with balanced load) shown in Table 9.

If the meter is designed for the measurement of energy in both directions, then this test shall be applied with energy flowing in each direction.

Table 9 – Starting current

Meters for	Class of meter		Power factor
	1	2	
Direct connection	0,004 I_b	0,005 I_b	1
Connection through current transformers	0,002 I_n	0,003 I_n	1

8.4 Meter constant

The relation between the test output and the indication in the display shall comply with the marking on the name-plate.

Copyrighted material licensed by SAI Global POWERCOR. Accessed on 2020-03-02.
Reproduction,distribution,storage or use on a network is prohibited.

8.5 Accuracy test conditions

To test the accuracy requirements, the following test conditions shall be maintained:

a) the meter shall be tested in its case with the cover in position; all parts intended to be earthed shall be earthed;

b) before any test is made, the circuits shall have been energized for a time sufficient to reach thermal stability;

c) in addition, for polyphase meters:

– the phase sequence shall be as marked on the diagram of connections;

– the voltages and currents shall be substantially balanced (see Table 10).

Table 10 – Voltage and current balance

Polyphase meters	Class of meter	
	1	2
Each of the voltages between phase and neutral and between any two phases shall not differ from the average corresponding voltage by more than	±1 %	±1 %
Each of the currents in the conductors shall not differ from the average current by more than	±2 %	±2 %
The phase displacements of each of these currents from the corresponding phase-to-neutral voltage, irrespective of the phase angle, shall not differ from each other by more than	2°	2°

d) the reference conditions are given in Table 11;

e) for requirements regarding test stations, see IEC 60736.

Table 11 – Reference conditions

Influence quantity	Reference value	Permissible tolerances for meters of class	
		1	2
Ambient temperature	Reference temperature or, in its absence, 23 °C [1)]	±2 °C	±2 °C
Voltage	Reference voltage	±1,0 %	±1,0 %
Frequency	Reference frequency	±0,3 %	±0,5 %
Phase sequence	L1 – L2 – L3	–	–
Voltage unbalance	All phases connected	–	–
Wave-form (d.c. and even harmonics, odd and sub-harmonics)	Sinusoidal voltages and currents	Distortion factor less than: 2 %	3 %
Continuous magnetic induction of external origin	Equal to zero	–	–

Copyrighted material licensed by SAI Global POWERCOR. Accessed on 2020-03-02.
Reproduction,distribution,storage or use on a network is prohibited.

Table 11 *(continued)*

Influence quantity	Reference value	Permissible tolerances for meters of class	
		1	2
Magnetic induction of external origin at the reference frequency	Magnetic induction equal to zero	Induction value which causes a variation of error not greater than:	
		±0,2 %	±0,3 %
		but should in any case be smaller than 0,05 mT [2)]	
Electromagnetic RF fields, 30 kHz to 2 GHz	Equal to zero	<1 V/m	<1 V/m
Operation of accessories	No operation of accessories	–	–
Conducted disturbances, induced by radiofrequency fields, 150 kHz to 80 MHz	Equal to zero	<1 V	<1 V

[1)] If the tests are made at a temperature other than the reference temperature, including permissible tolerances, the results shall be corrected by applying the appropriate temperature coefficient of the meter.

[2)] The test consists of:

a) for a single-phase meter, determining the errors first with the meter normally connected to the mains and then after inverting the connections to the current circuits as well as to the voltage circuits. Half of the difference between the two errors is the value of the variation of error. Because of the unknown phase of the external field, the test should be made at 0,1 I_b resp. 0,05 I_n at unity power factor and 0,2 I_b resp. 0,1 I_n at 0,5 power factor;

b) for a three-phase meter, making three measurements at 0,1 I_b resp. 0,05 I_n at unity power factor, after each of which the connection to the current circuits and to the voltage circuits are changed over 120° while the phase sequence is not altered. The greatest difference between each of the errors so determined and their average value is the value of the variation of error.

8.6 Interpretation of test results

Certain test results may fall outside the limits indicated in Tables 6 and 7, owing to uncertainties of measurements and other parameters capable of influencing the measurements. However, if by one displacement of the zero line parallel to itself by no more than the limits indicated in Table 12, all the test results are brought within the limits indicated in Tables 6 and 7, the meter type shall be considered acceptable.

Table 12 – Interpretation of test results

	Class of meter	
	1	2
Permissible displacement of the zero line (%)	0,5	1,0

Copyrighted material licensed by SAI Global POWERCOR. Accessed on 2020-03-02.
Reproduction,distribution,storage or use on a network is prohibited.

Annex A
(normative)

Test circuit diagram for d.c., even harmonics, odd harmonics and sub-harmonics

NOTE The values given in the Figures A.2, A.3 and A.5 to A.8 are for 50 Hz only. For other frequencies the values have to be adapted accordingly.

A.1 Half-wave rectification (d.c. and even harmonics)

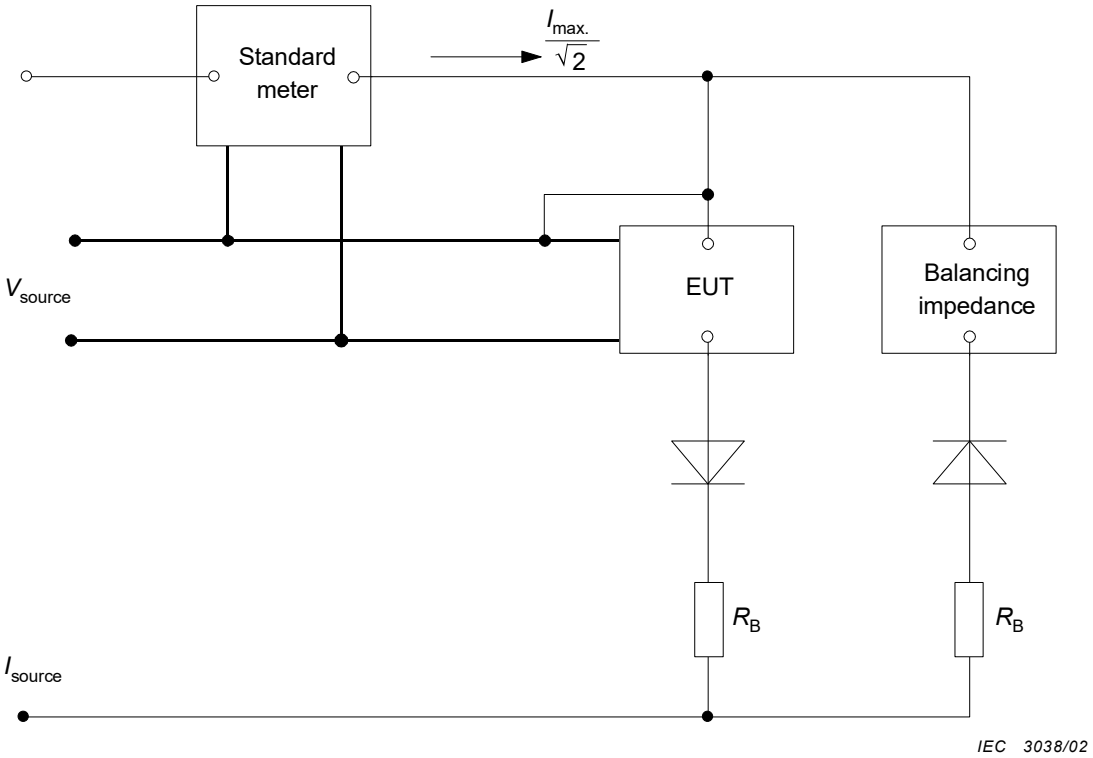

NOTE 1 The balancing impedance shall be equal to the impedance of the equipment under test (EUT) to ensure the measurement accuracy.

NOTE 2 The balancing impedance could most conveniently be a meter of the same type as the EUT.

NOTE 3 The rectifier diodes shall be of the same type.

NOTE 4 To improve the balancing condition, an additional resistor R_B can be introduced in both paths. Its value should be approximately 10 times the value of the EUT.

Figure A.1 – Test circuit diagram for half-wave rectification

Copyrighted material licensed by SAI Global POWERCOR. Accessed on 2020-03-02.
Reproduction,distribution,storage or use on a network is prohibited.

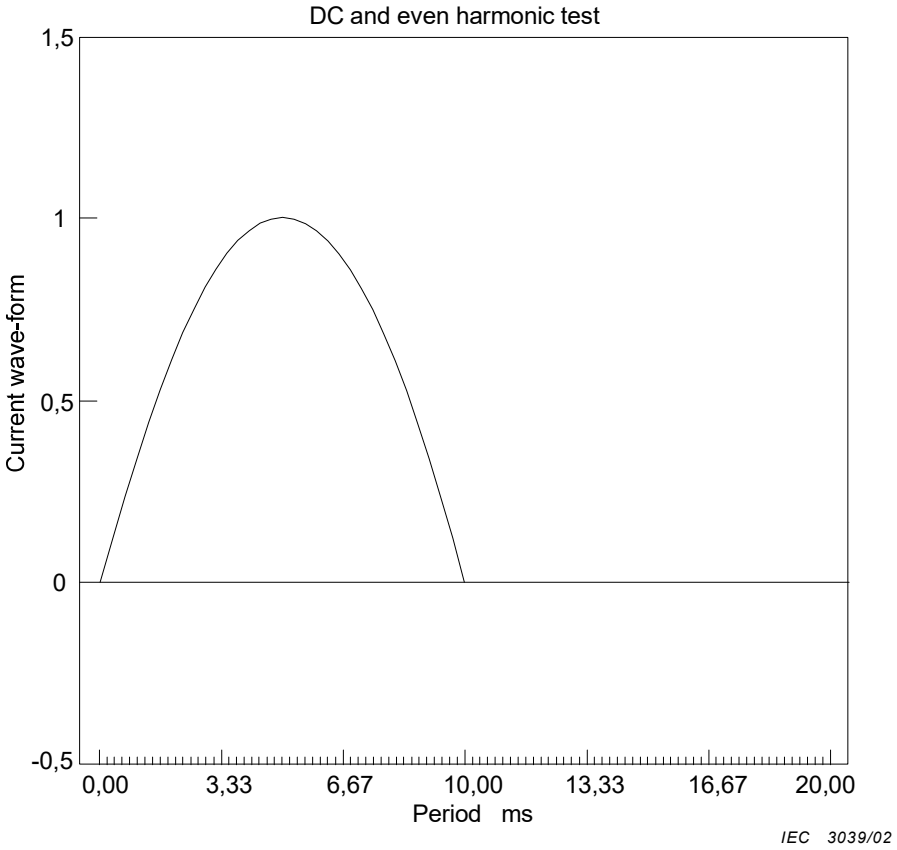

Figure A.2 – Half-wave rectified waveform

Copyrighted material licensed by SAI Global POWERCOR. Accessed on 2020-03-02.
Reproduction,distribution,storage or use on a network is prohibited.

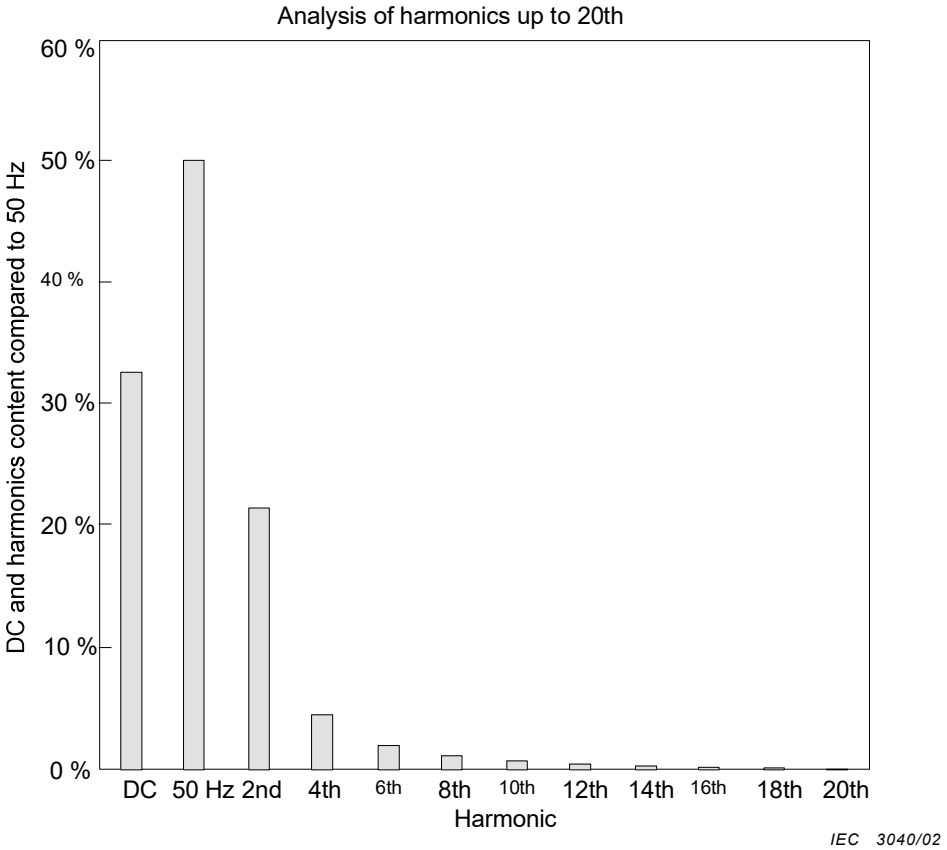

Figure A.3 – Informative distribution of half-wave harmonic content (the Fourier analysis is not complete)

Copyrighted material licensed by SAI Global POWERCOR. Accessed on 2020-03-02.
Reproduction,distribution,storage or use on a network is prohibited.

A.2 Phase fired control (odd harmonics)

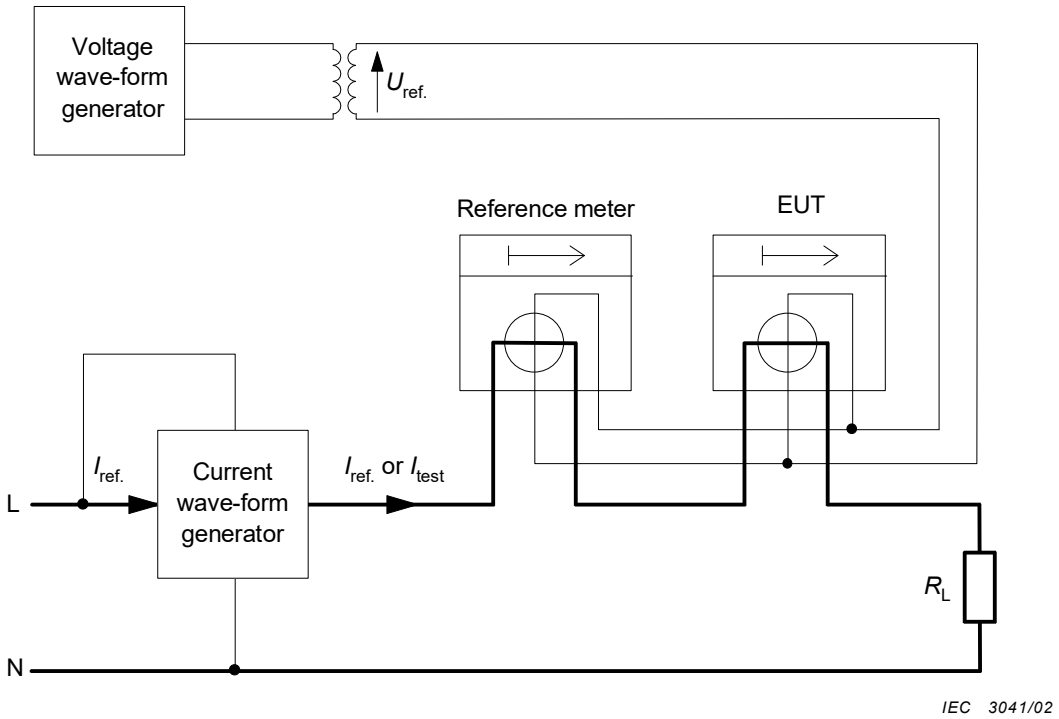

NOTE The reference meter shall measure the total active energy (fundamental + harmonics) in the presence of harmonics.

Figure A.4 – Test circuit diagram (informative)

Copyrighted material licensed by SAI Global POWERCOR. Accessed on 2020-03-02.
Reproduction,distribution,storage or use on a network is prohibited.

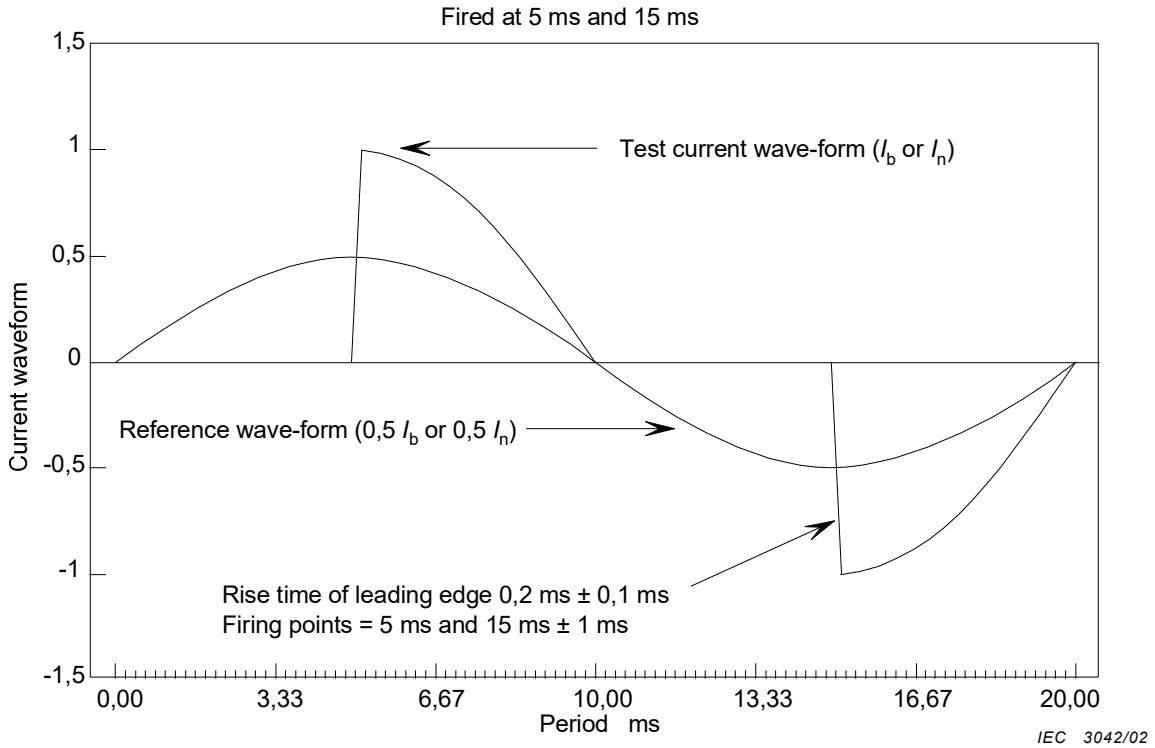

Figure A.5 – Phase fired waveform

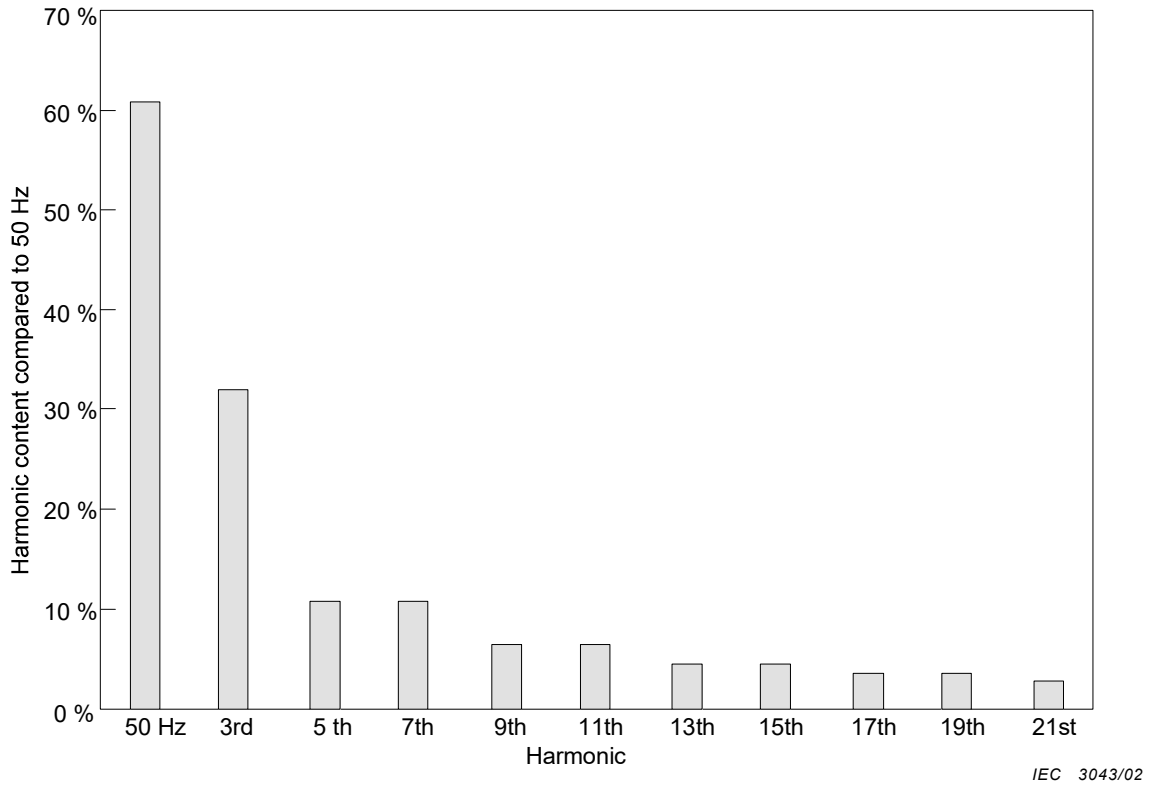

Figure A.6 – Informative distribution of harmonic content of phase fired waveform (the Fourier analysis is not complete)

Copyrighted material licensed by SAI Global POWERCOR. Accessed on 2020-03-02.
Reproduction,distribution,storage or use on a network is prohibited.

A.3 Burst control (sub-harmonics)

Test circuit diagram, see Figure A.4.

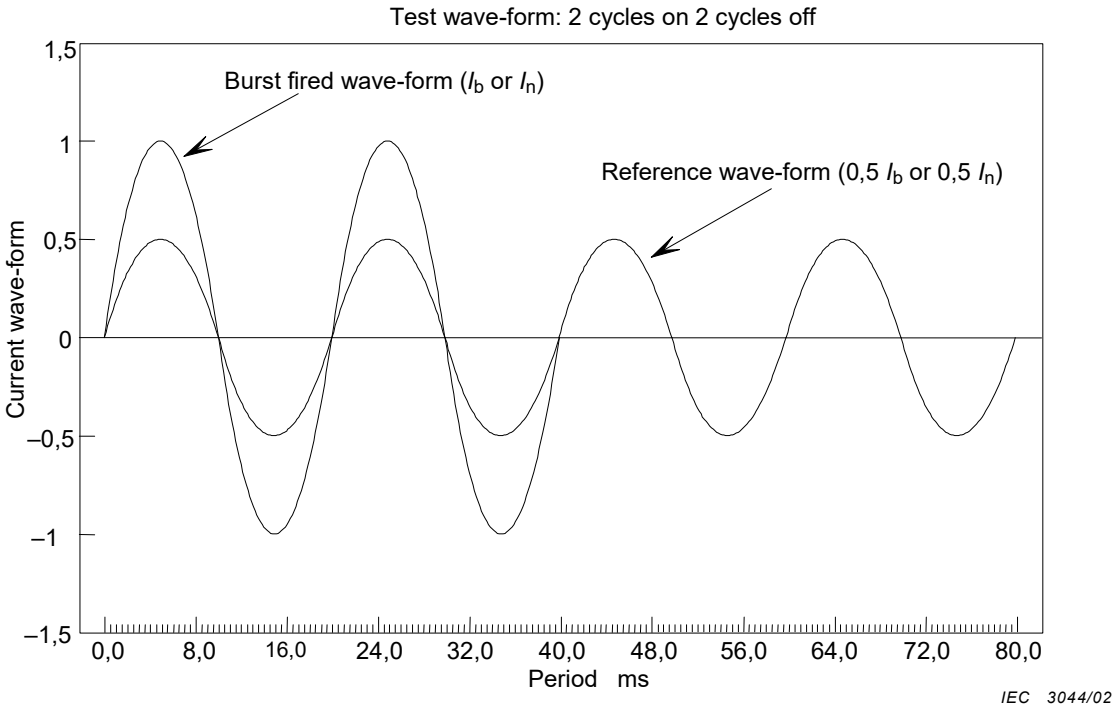

Figure A.7 – Burst fired waveform

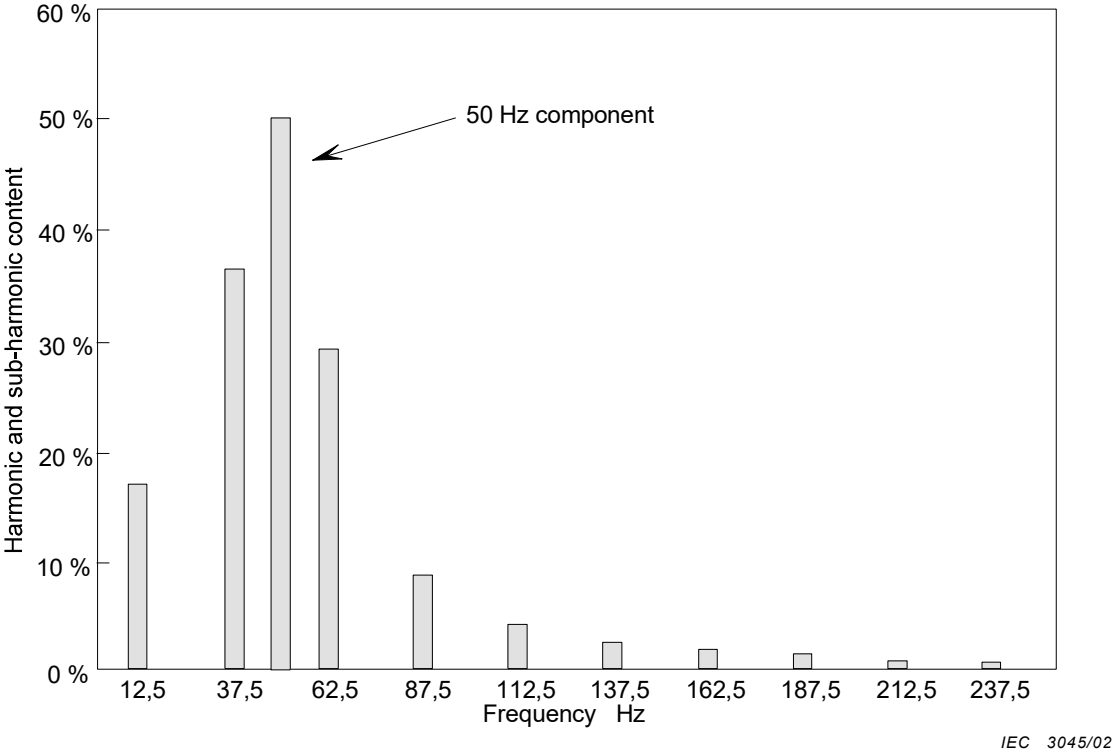

Figure A.8 – Informative distribution of harmonics (the Fourier analysis is not complete)

Copyrighted material licensed by SAI Global POWERCOR. Accessed on 2020-03-02.
Reproduction,distribution,storage or use on a network is prohibited.

Annex B
(normative)

Electromagnet for testing the influence of externally produced magnetic fields

Scale 1:1 (all dimensions are in millimetres)

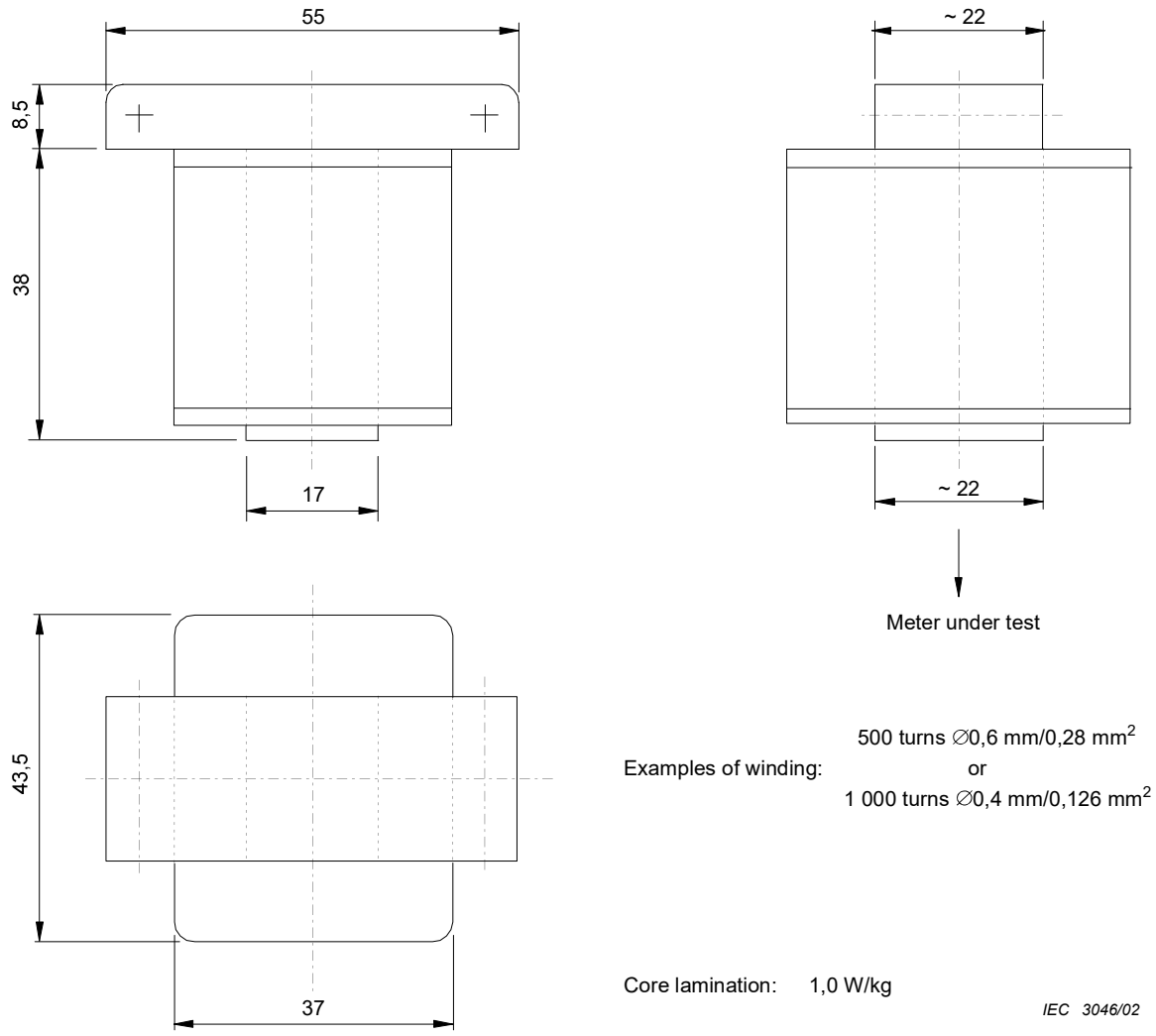

Figure B.1 – Electromagnet for testing the influence of externally produced magnetic fields

Copyrighted material licensed by SAI Global POWERCOR. Accessed on 2020-03-02.
Reproduction,distribution,storage or use on a network is prohibited.

Bibliography

IEC 62058-11:2008, *Electricity metering equipment (AC) – Acceptance inspection – Part 11: General acceptance inspection method*

IEC 62058-31:2008, *Electricity metering equipment (AC) – Acceptance inspection – Part 31: Particular requirements for static meters for active energy (classes 0,2 S, 0,5 S, 1 and 2)*

Copyrighted material licensed by SAI Global POWERCOR. Accessed on 2020-03-02.
Reproduction,distribution,storage or use on a network is prohibited.

APPENDIX ZZ

VARIATIONS TO IEC 62053-21:2016 FOR APPLICATION IN AUSTRALIA

(Normative)

ZZ1 SCOPE

This Appendix lists the normative variations to IEC 62053-21:2016 (ED.1.1).

ZZ2 VARIATIONS

The following modifications are required for Australian conditions:

Element	Instruction/New text
Cl 2	1 After the first paragraph, *add* the following: The Australian or Australian/New Zealand Standards listed below are modified adoptions of, or not equivalent to, IEC normative references and are required for the application of this Standard. All references in the source text to those IEC normative references shall be replaced by references to the corresponding Australian or Australian/New Zealand Standards. Australian or Australian/New Zealand Standards that are identical adoptions of international normative references may be used interchangeably. 2 *Delete* listed document IEC 62052-11:2003 and *replace* with the following: AS 62052.11, *Electricity metering equipment (ac) — General requirements, tests and test conditions — Part 11: Metering equipment (IEC 62052-11:2016 (ED.1.1) MOD)* 3 *Delete* listed document IEC 62052-31:2015, and *replace* with the following: AS 62052.31, *Electricity metering equipment (AC) — General requirements, tests and test conditions — Part 31: Product safety requirements and tests (IEC 62052-31:2015 (ED.1.0) MOD)*

Copyrighted material licensed by SAI Global POWERCOR. Accessed on 2020-03-02.
Reproduction,distribution,storage or use on a network is prohibited.

Standards Australia

Standards Australia develops Australian Standards® and other documents of public benefit and national interest. These Standards are developed through an open process of consultation and consensus, in which all interested parties are invited to participate. Through a Memorandum of Understanding with the Commonwealth Government, Standards Australia is recognized as Australia's peak non-government national standards body.

For further information visit **www.standards.org.au**

Australian Standards®

Committees of experts from industry, governments, consumers and other relevant sectors prepare Australian Standards. The requirements or recommendations contained in published Standards are a consensus of the views of representative interests and also take account of comments received from other sources. They reflect the latest scientific and industry experience. Australian Standards are kept under continuous review after publication and are updated regularly to take account of changing technology.

International Involvement

Standards Australia is responsible for ensuring the Australian viewpoint is considered in the formulation of International Standards and that the latest international experience is incorporated in national Standards. This role is vital in assisting local industry to compete in international markets. Standards Australia represents Australia at both the International Organization for Standardization (ISO) and the International Electrotechnical Commission (IEC).

Sales and Distribution

Australian Standards®, Handbooks and other documents developed by Standards Australia are printed and distributed under licence by SAI Global Limited.

Copyrighted material licensed by SAI Global POWERCOR. Accessed on 2020-03-02.
Reproduction,distribution,storage or use on a network is prohibited.

For information regarding the development of Standards contact:
Standards Australia Limited
GPO Box 476
Sydney NSW 2001
Phone: 02 9237 6000
Email: mail@standards.org.au
Internet: www.standards.org.au

For information regarding the sale and distribution of Standards contact:
SAI Global Limited
Phone: 13 12 42
Email: sales@saiglobal.com

ISBN 978 1 76072 294 4

Copyrighted material licensed by SAI Global POWERCOR. Accessed on 2020-03-02.
Reproduction,distribution,storage or use on a network is prohibited.

This page has been left intentionally blank.

Copyrighted material licensed by SAI Global POWERCOR. Accessed on 2020-03-02.
Reproduction,distribution,storage or use on a network is prohibited.