POLYTECHNIQUE MONTRÉAL

UNIVERSITÉ D'INGÉNIERIE

Review on 5G New Radio

ELE6709 Final Project

Prof. Jean-François Frigon

Maha Abdelkhalek
Mansour Naslcheraghi
Claudio Alkazzi
Alexandre Sibué

Content

- Introduction
- 5G network architecture
- Radio Access Network (RAN)
- Network Deployment Options
- Physical Layer: Low Latency
- Frame structure: Low Latency
- 5G NR Ultra-High reliability
- Non-orthogonal Multiple Access (NOMA)

Introduction

5G services is classified into three categories:

- Ultra-reliable and low latency communication (URLLC);
- Massive machine-type communication (mMTC);
- Enhanced mobile broadband (eMBB) [1].

To cope with these new service categories, various performance requirements such as:

- Massive connectivity;
- Lower latency;
- Higher reliability;
- Better energy efficiency have been newly introduced.

[1] ITU-R Rec. M.2083-0, “IMT Vision — Framework and Overall Objectives of the Future Development of IMT for 2020 and Beyond,” Sept. 2015.

Radio Access Network (RAN) (1/8)

C-RAN evolution towards O-RAN [1]

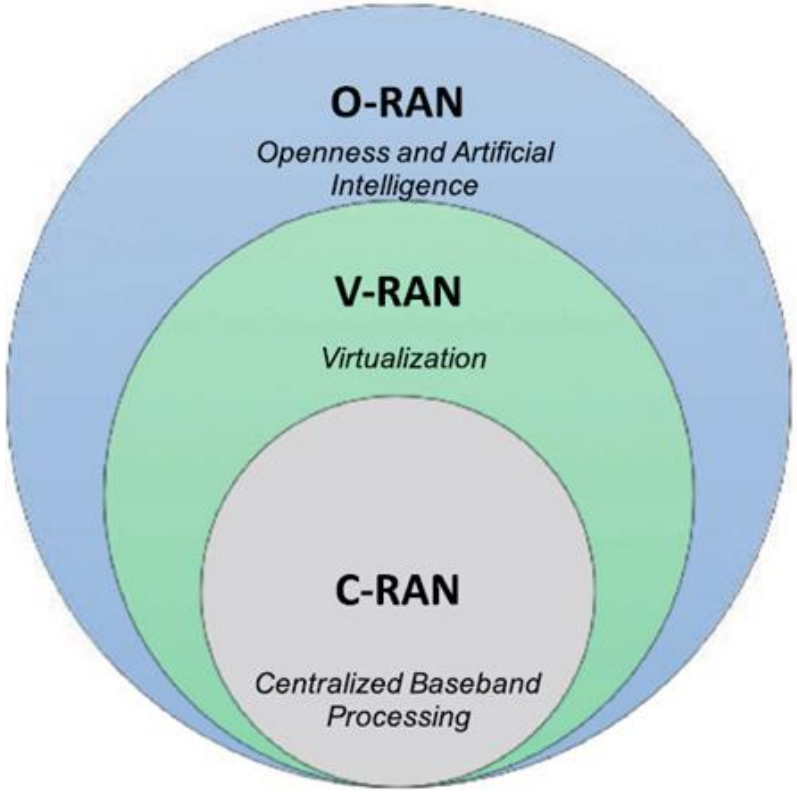

Heterogeneous cellular layout [2]

[1] Gavrilovska, L., Rakovic, V., & Denkovski, D. (2020). From Cloud RAN to Open RAN. *Wireless Personal Communications*, 1-17.
[2] Habibi, M. A., Nasimi, M., Han, B., & Schotten, H. D. (2019). A comprehensive survey of RAN architectures toward 5G mobile communication system. *IEEE Access*, *7*, 70371-70421.

Radio Access Network (RAN) (2/)

C-RAN (CLOUD-RAN)

Separate all **BBUs** from their corresponding **RRHs**, and to pool them into a centralized, cloudified, shared, and virtualized BBU pool

- ✓ Decreases the CAPEX and OPEX of MNO (mobile network operators);
- ✓ Reduces the energy consumption;
- ✓ Increases the network scalability;
- ✓ Simplifies network management and maintenance;
- ✓ Improves the spectral efficiency and the network throughput;
- ✓ Facilitates load balancing.

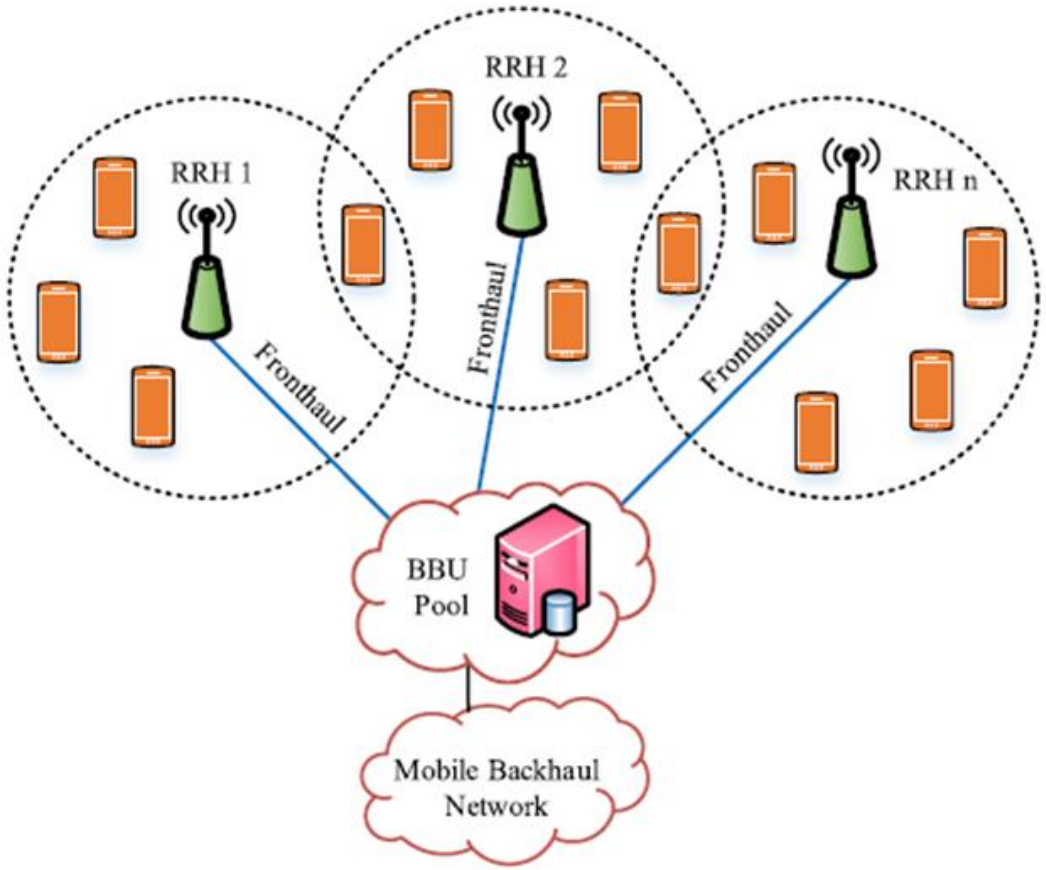

[2]

BBU: Baseband Unit

RRH: Remote Radio Head

Radio Access Network (RAN) (3/8)

C-RAN (CLOUD-RAN)

Centralization

-Optimize network performance;
- Decrease energy consumption;
- Increase spectrum efficiency.

Virtualization → Decrease the CAPEX and OPEX of 5G mobile networks.

Radio Access Network (RAN) (4/8)

Fully Centralized C-RAN [2]

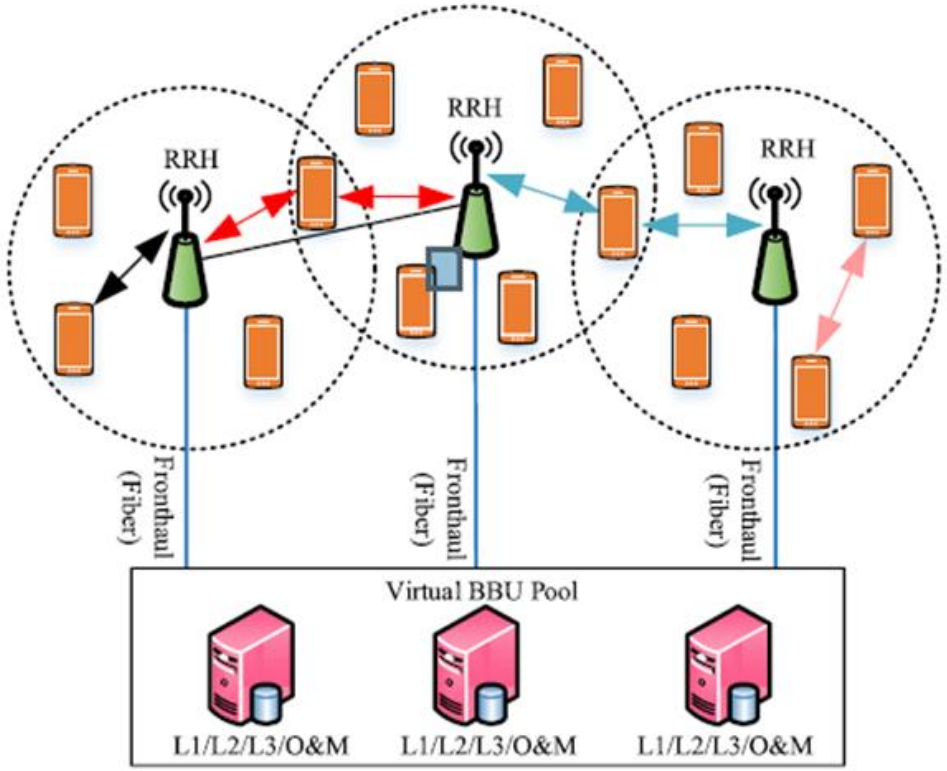

Partially Centralized C-RAN [2]

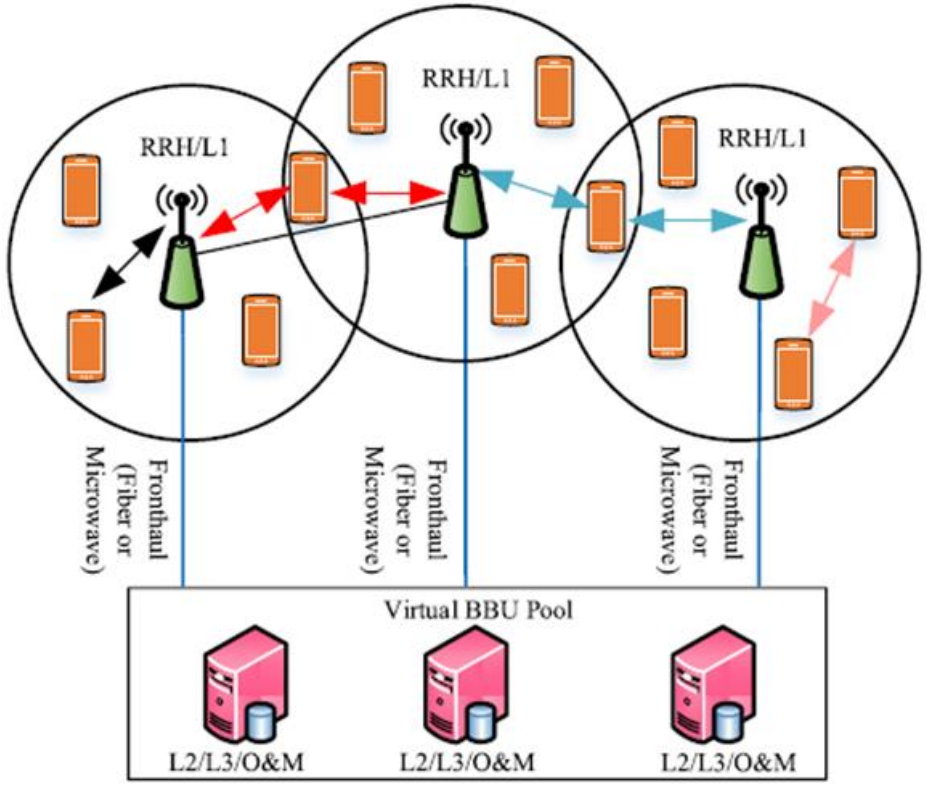

Radio Access Network (RAN) (5/8)

VIRTUAL RAN (V-RAN): The evolution of C-RAN

- Flexible control;
- Low cost;
- Efficient resource usage;
- Diversified applications;
- Address many of the underlying issues related to cloud deployment of RANs.

V-RAN leverages the wireless/radio and BBU resources to be shared by many RRHs, based on the underlying traffic conditions.

Radio Access Network (RAN) (6/8)

OPEN RAN (O-RAN): The evolution of C-RAN

➢ **Openness:**

- Allow smaller vendors to introduce their own services;
- Allow operators to customize the network as needed;
- Allow multiple vendors to deploy their technology on the network, thereby enabling competition and reducing costs.

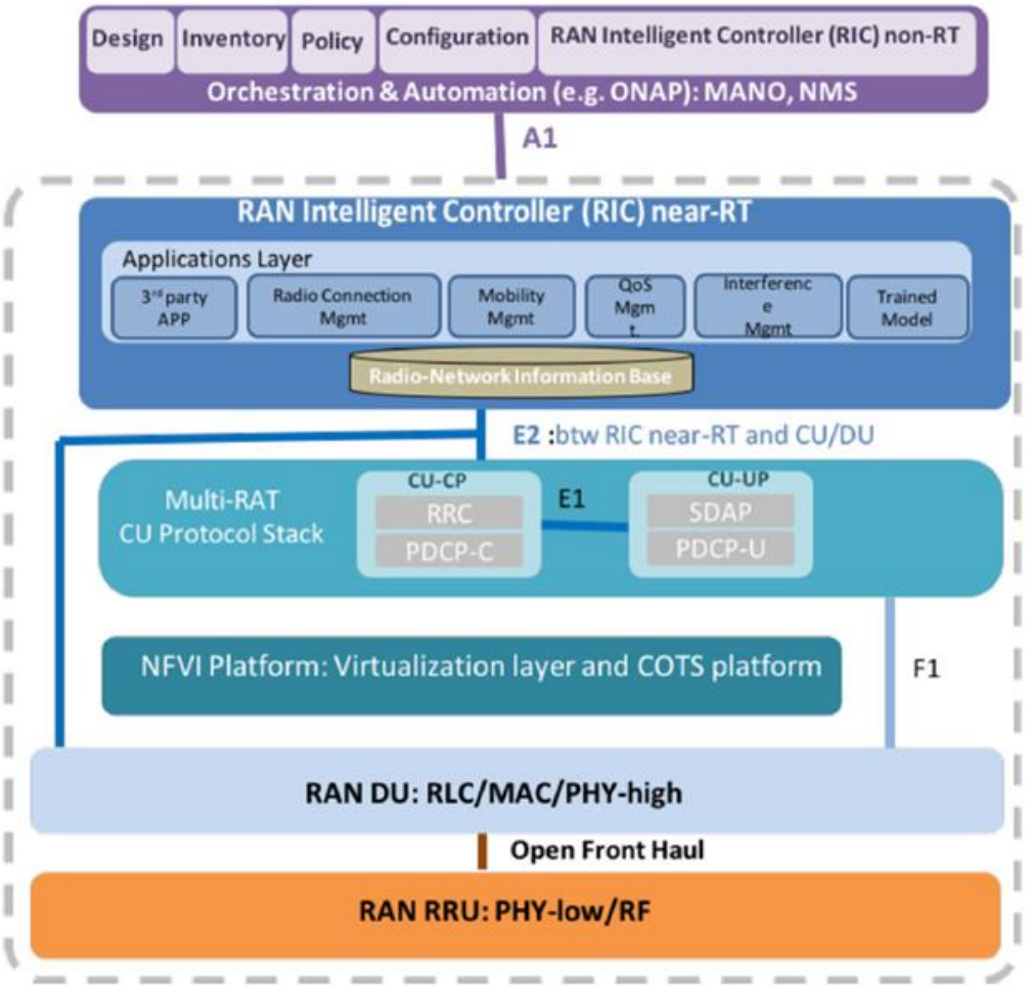

[1] O-RAN architecture

Radio Access Network (RAN) (6/8)

OPEN RAN (O-RAN): The evolution of C-RAN

- **Intelligence**

Intelligence is quickly becoming a necessity for the deployment, optimization, and operation of wireless networks beyond 5G [6], [7].

[6] C. Wang, M. D. Renzo, S. Stanczak, S. Wang, and E. G. Larsson, "Artificial intelligence enabled wireless networking for 5G and beyond: Recent advances and future challenges," IEEE Wireless Communications, vol. 27, no. 1, pp. 16–23, 2020.

[7] S. Niknam, H. S. Dhillon, and J. H. Reed, "Federated learning for wireless communications: Motivation, opportunities and challenges," IEEE Communications Magazine, to appear, 2020. [Online]. Available: https://arxiv.org/abs/1908.06847

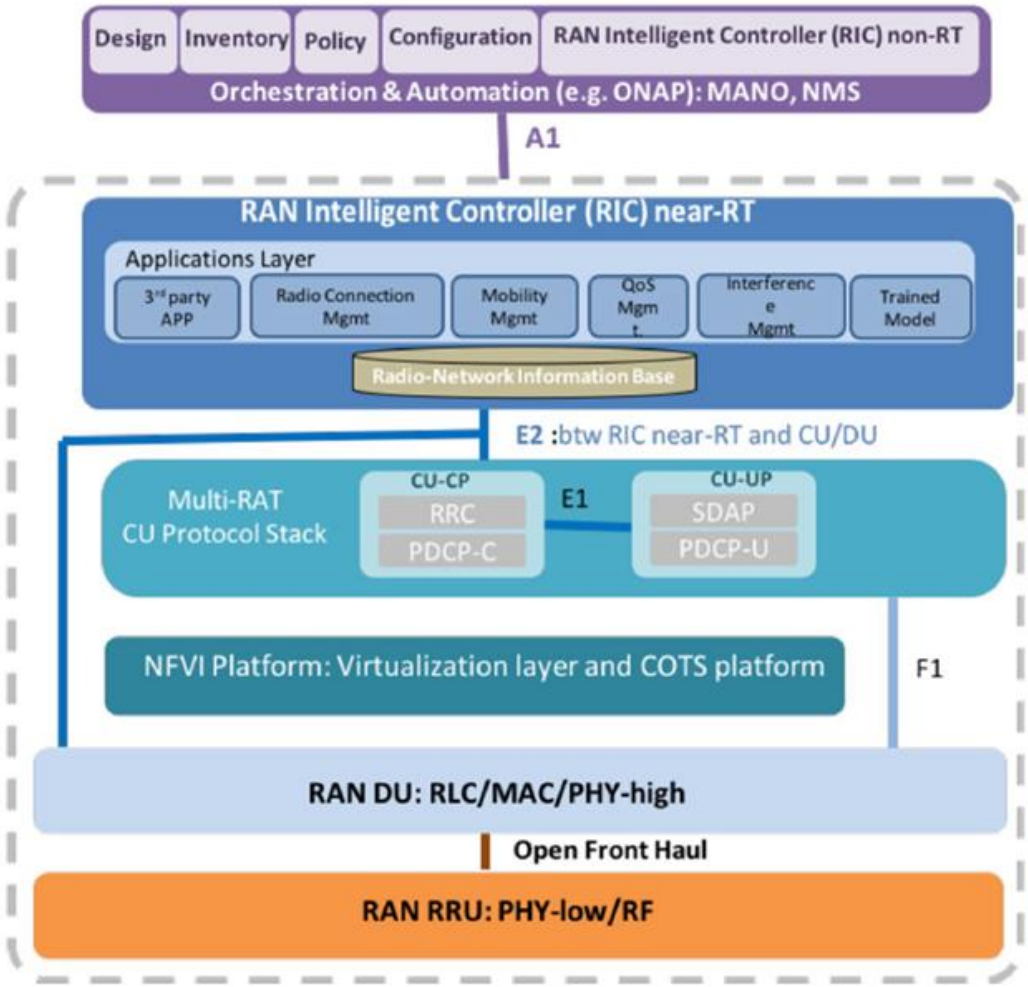

[1] O-RAN architecture

Radio Access Network (RAN) (7/8)

OPEN RAN (O-RAN): The evolution of C-RAN

Features and functional modules

- RIC non- Real Time (non-RT) layer;
- RIC non-Real Time (near-RT) layer;
- Multi-RAT Centralized Unit (CU) protocol stack and platform;
- Distributed Unit (DU)
- RRH Function definition.

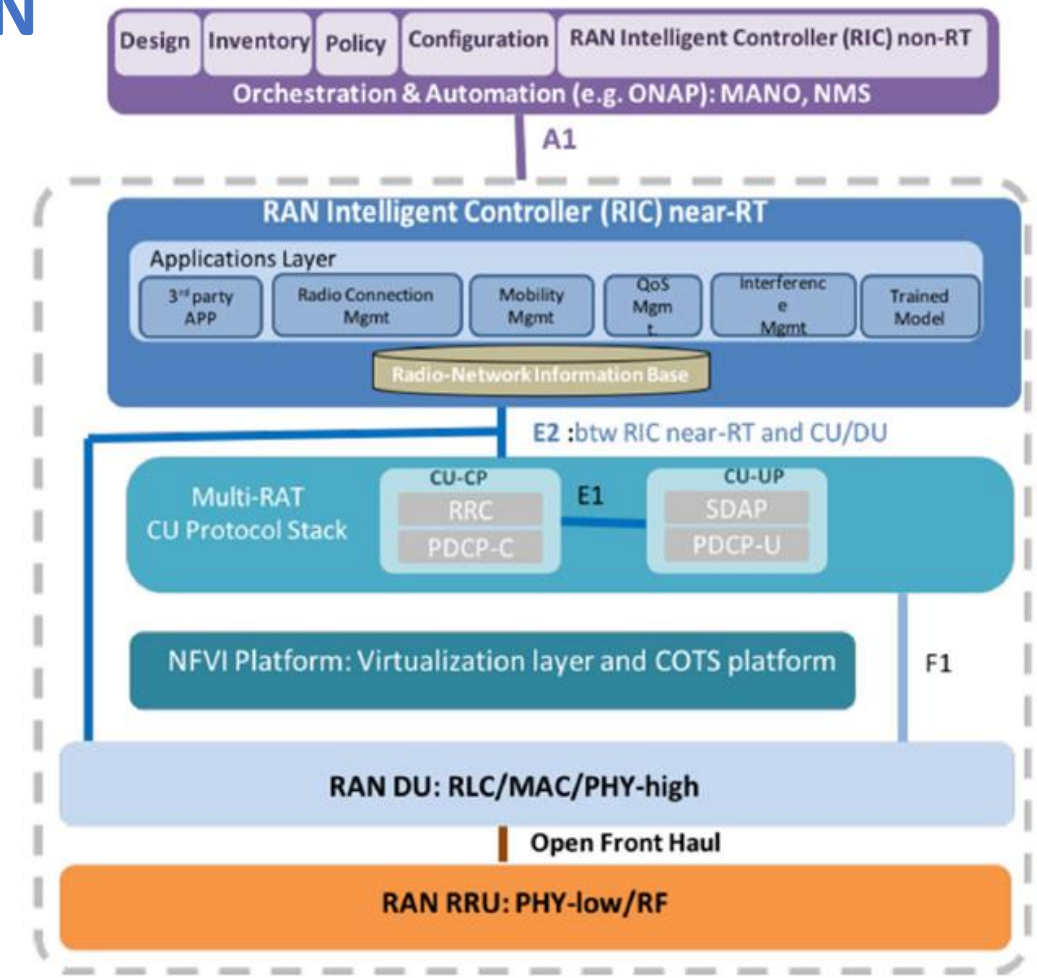

[1] O-RAN architecture

Network Deployment Options

- **Standalone (SA)** using only one radio access technology;
- **Non-Standalone (NSA)** combining multiple radio access technologies.

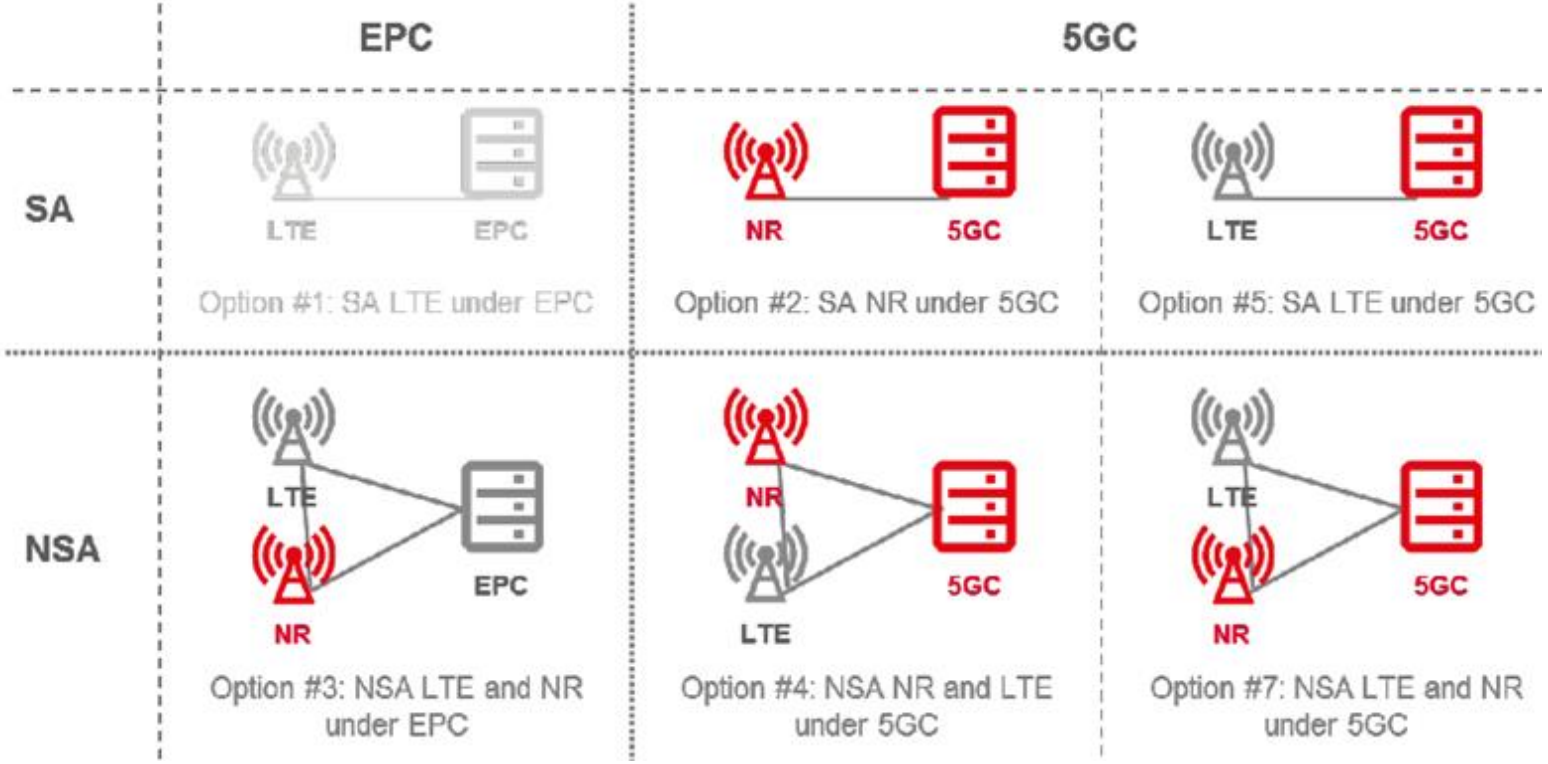

[3] Kim, D., & Zarri, M. (2018). Road to 5G: Introduction and migration. *White Paper*.

Physical Layer: Low Latency (1/3)

The URLLC needs to meet:

- ✓ Low latency
- ✓ Ultra-high reliability

- ➢ Fundamental change in the physical layer architecture (packet, slot, and frame).
- ➢ Latency-sensitive packet structure for a fast decoding process
- ➢ A flexible frame structure
- ➢ The URLLC packet should be transmitted instantly without delay.

Physical Layer: Low Latency (2/3)

Physical layer latency *T*_L can be divided into the following five components

$$T_L=T_ttt+T_prop+T_proc+T_retx+T_sig$$

- T_ttt is the time-to-transmit latency, which corresponds to the time to transmit a packet.
- T_prop is the signal propagation time from the transmitter to the receiver.
- T_proc is the time to perform the encoding and decoding, and also the channel estimation in the initial transmission.
- T_retx is the time taken by retransmission.
- T_sig is the pre-processing time for the signaling exchange such as connection request, scheduling grant, channel training and feedback, and queuing delay.

Physical Layer: Low Latency (3/3)

The average latency of URLLC < 0.5 ms [4]

4G LTE systems: T_ttt=1 ms period.

T_ttt≈ hundreds of microseconds.

New frame structure reducing

[4] 3GPP Tech. Rep. 38.913, “Study on Scenarios and Requirements for Next Generation Access Technologies (Release 14),” v14.2.0, 2017.

Frame structure: Low Latency (1/2)

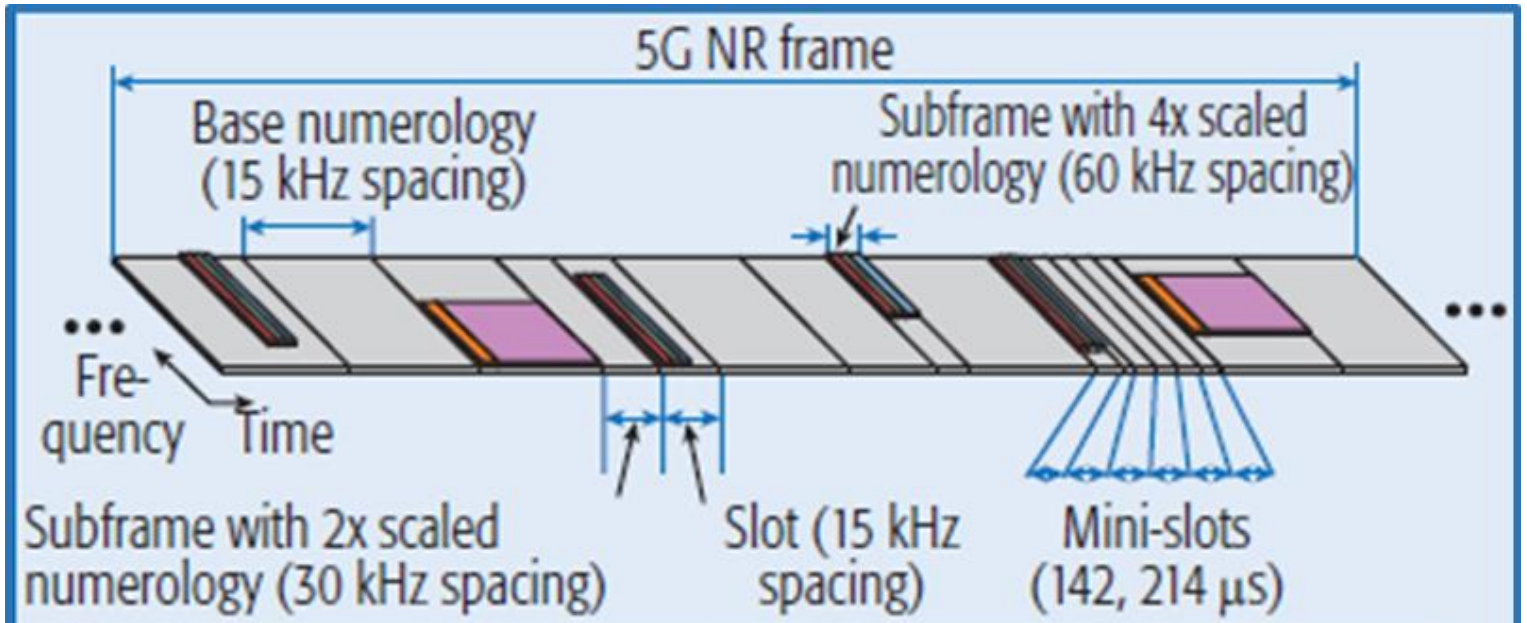

T_{ttt} (µs)			
Numerology	Subframe	Slot	Mini-slot
1x	1000	500	142/241
2x	500	250	71
4x	250	125	36

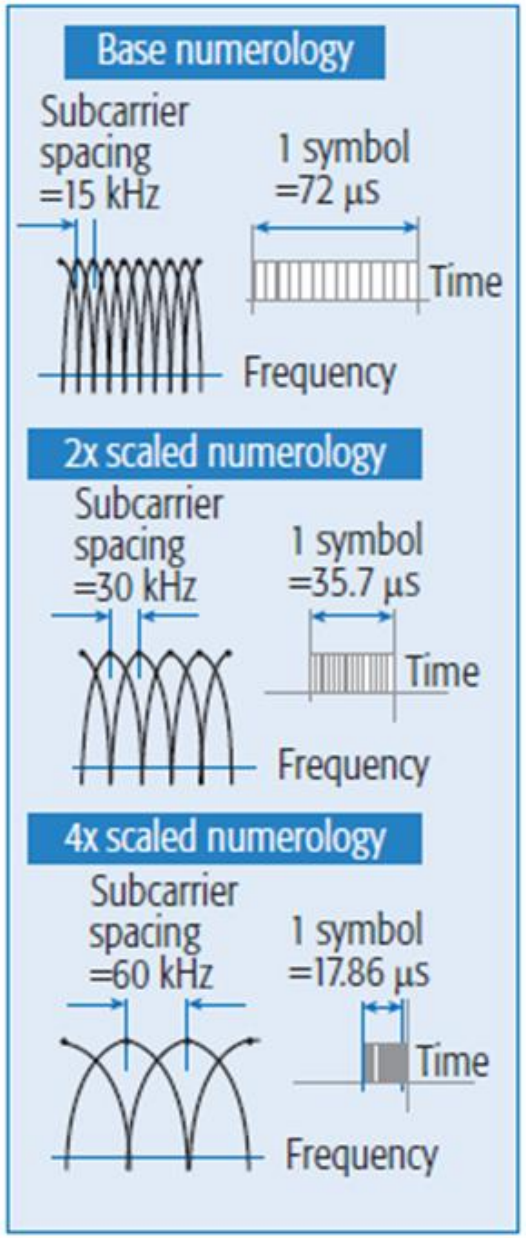

[5] Ji, H., Park, S., Yeo, J., Kim, Y., Lee, J., & Shim, B. (2018). Ultra-reliable and low-latency communications in 5G downlink: Physical layer aspects. *IEEE Wireless Communications*, *25*(3), 124-130.

Frame structure: Low Latency (2/2)

Mmwaves

Small channel delay spread

↓

Control the subcarrier spacing

⬇

Reduce the symbol period

Sub 6 GHz

Large channel delay spread

↓

Reduce the transmission time interval (TTI) of the packet

Example : mini-slot level (2~3 symbols) and slot level (7 symbols) transmission, Tttt can be reduced to 142, 241, and 500 ms, respectively.

5G NR Ultra-High reliability (1/2)

4G systems:
Reliability for a package transmission is 0,99

Channel coding:
- Turbo and convolution code with cyclic redundancy check (CRC) attachment for the large packet;
- A simple code (the repetition and Reed-Muller code) without CRC attachment for the small packet.

Partial retransmission of erroneous transport block called hybrid automatic repeat request (HARQ).

URLLC services requires much better performance, and in fact, the target reliability within 1 ms period should be at least 0.99999 [2].

[2] 3GPP Tech. Rep. 38.913, “Study on Scenarios and Requirements for Next Generation Access Technologies (Release 14),” v14.2.0, 2017.

5G NR Ultra-High reliability (2/2)

- Improve channel estimation accuracy;
- Additional resources in the frequency, antenna, and spatial domains;
- Advanced channel coding scheme suitable for the short packet transmission:
  - **Polar code**: for the enhancement of control
  - **Low density parity check (LDPC) code**: for data channel.

Non-orthogonal Multiple Access (NOMA)

NOMA is through power domain

Channel gain

Power level

$$h_1 > h_2 \quad \Rightarrow \quad p_1 < p_2$$

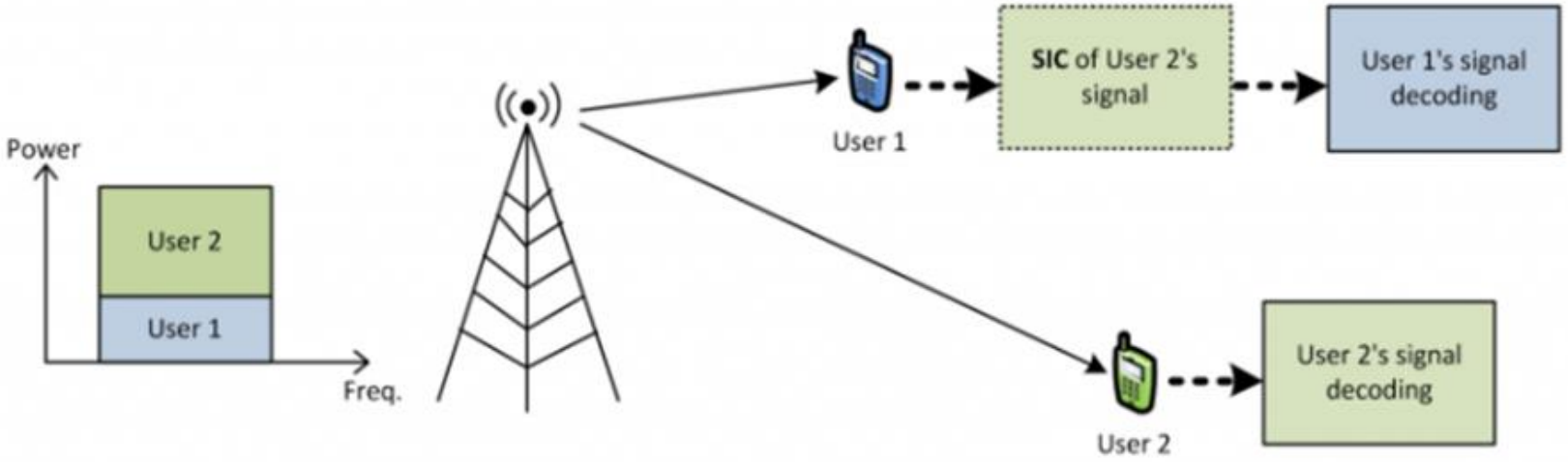

Category	OMA	NOMA
Spectral efficiency and throughput	A specific resource is assigned to each user regardless if it experiences a good or a bad channel condition; thus, the overall system suffers from low spectral efficiency and throughput.	The same resource is assigned to multiple mobile users, with both good and bad channel conditions, at the same time. Hence, the resource assigned for the weak user is also used by the strong user, and the interference can be mitigated through SIC processes at the receiver.
User fairness, low latency, and massive connectivity	The user with a good channel condition has a higher priority to be served while the user with a bad channel condition must wait for access, which leads to a fairness problem and high latency. This approach can not support massive connectivity.	Can serve multiple users with different channel conditions simultaneously; therefore, it can provide user fairness, lower latency, and higher massive connectivity.

NOMA limitations

- The computational complexity is higher
- The channel state information (CSI) must be known at the base station (BS) $\Longrightarrow$ overhead.
- The number of users utilizing the same resources must be limited.
- The users grouped together must satisfy considerable channel gain differences in order to improve the overall throughput.

Resource Management in 5G New Radio (NR)

Mansour Naslcheraghi

- Numerology
- Frame Structure
- Which numerology and when/where?
- Some challenges utilizing numerology and some proposed solutions
- Concluding remarks and some potential research directions

Spectrum in 5G NR

Why new spectrum utilization?

- Current spectrum is over occupied
- Multimedia accounts for majority of data traffic
- Advent of new technologies along with vast array of service/user types
- New requirements for high data rates and much lower latencies
- Etc.

Tens of billion dollars paid by operators for this sweet spectrum

The industry is still on-legs for more than 4 decades

5G NR spectrum candidates

- Unlocking high frequencies
- Coexistence with the traditional ranges

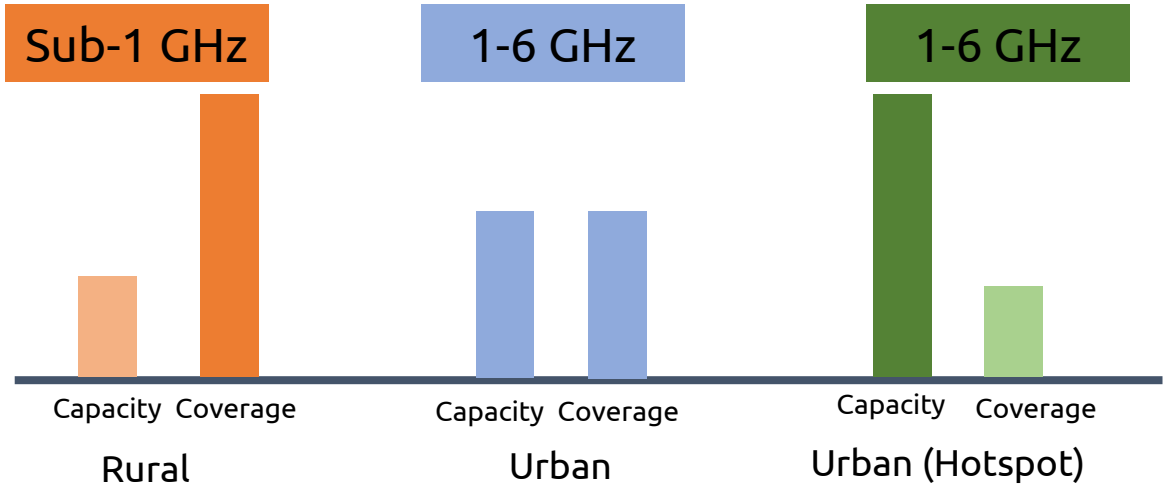

Numerology and Frame Structure: RB Bandwidth and CP

Numerology Definition:

The term **numerology** in 5G refers to a set of parameters like subcarrier spacing, symbol length and Cyclic Prefix (CP) in OFDM.

μ	$\Delta f = 2^{\mu} \times 15$ (KHz)	Cyclic Prefix (CP)
0	15	Normal
1	30	Normal
2	60	Normal, Extended
3	120	Normal
4	240	Normal

Impacts:

Using of multiple numerologies has impact on:

- Spectral efficiency
- Scheduling Complexity
- Computational Complexity
- Signaling overhead.

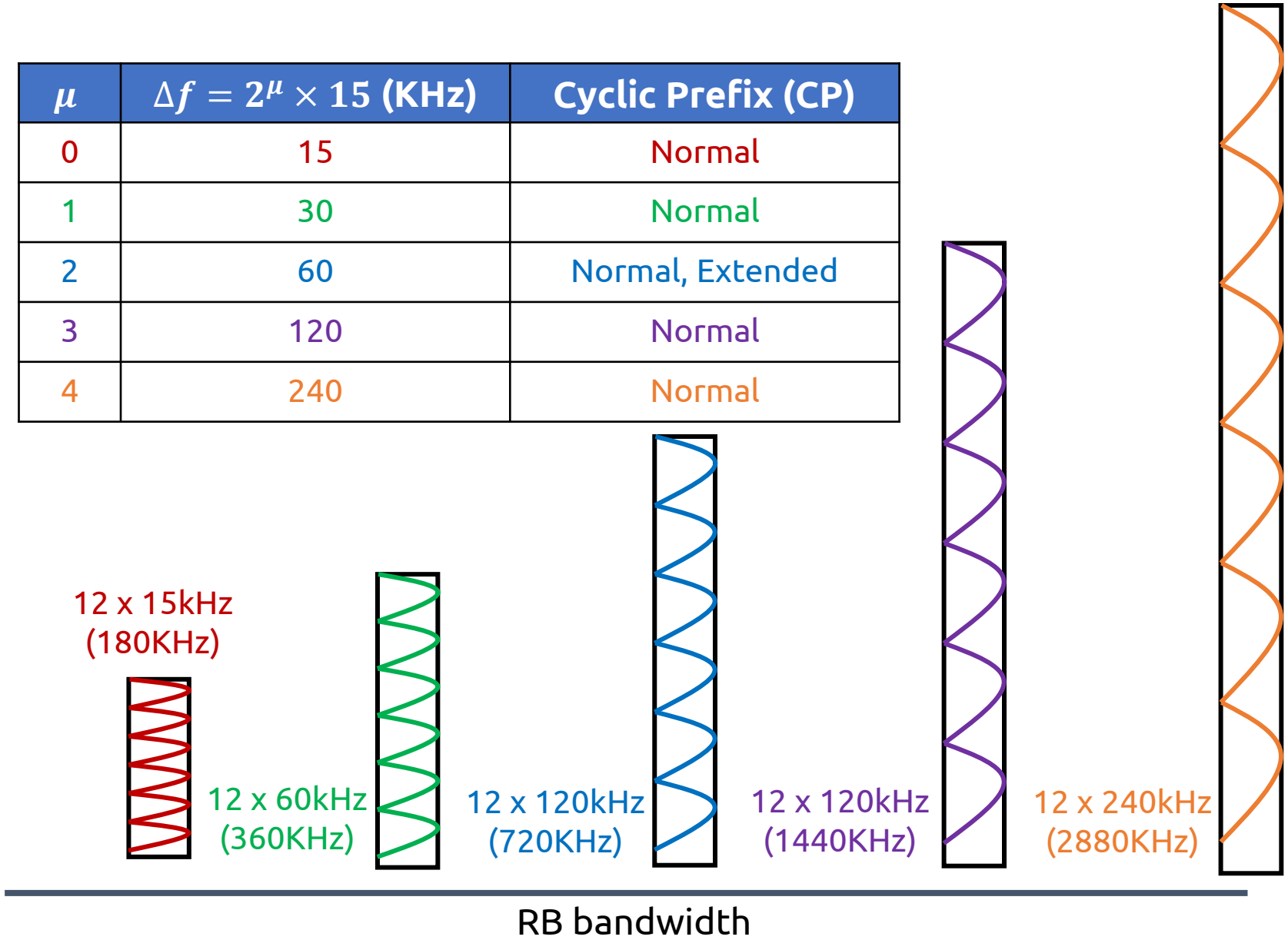

Numerology and Frame Structure: Number of slots per subframe/frame

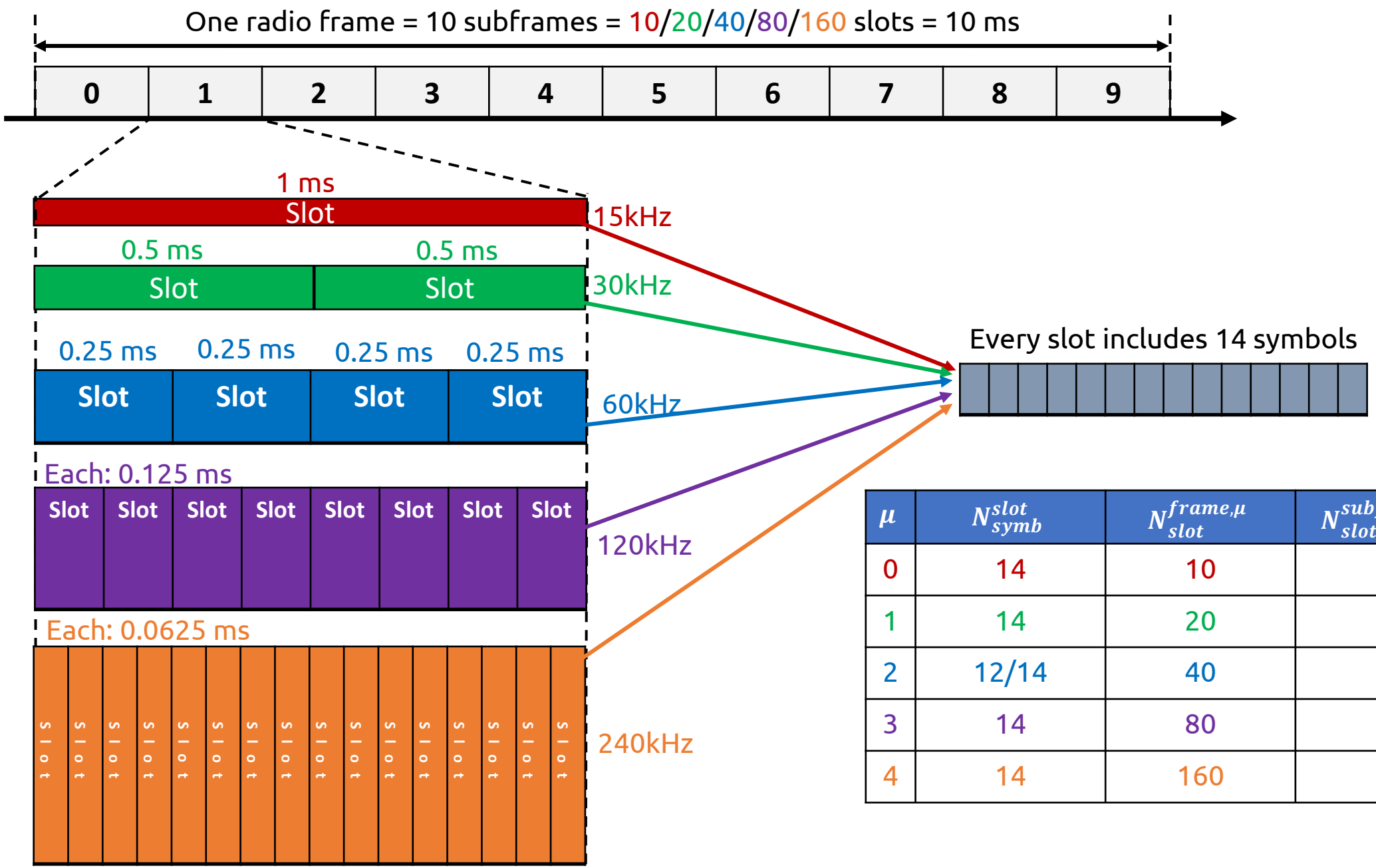

μ	N_{symb}^{slot}	$N_{slot}^{frame,\mu}$	$N_{slot}^{subframe,\mu}$
0	14	10	1
1	14	20	2
2	12/14	40	4
3	14	80	8
4	14	160	16

Numerology and Frame Structure: BW versus duration w.r.t. symb/slot

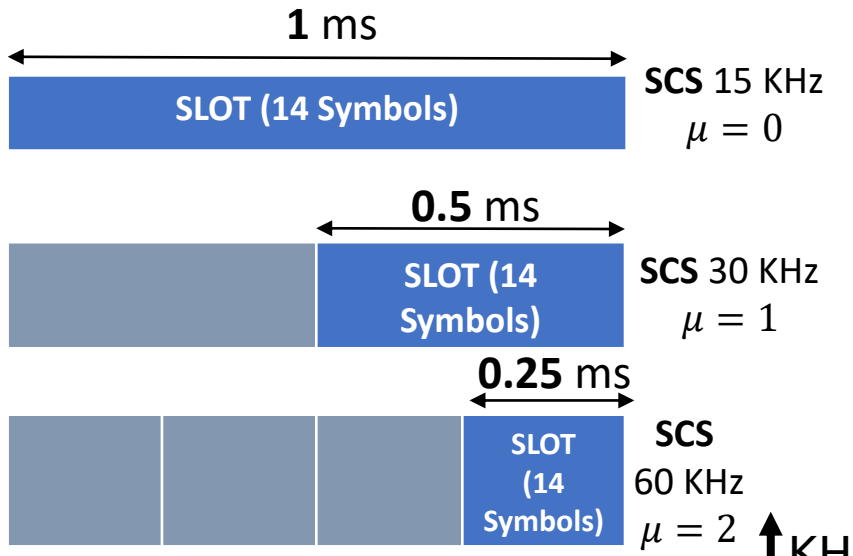

(a)

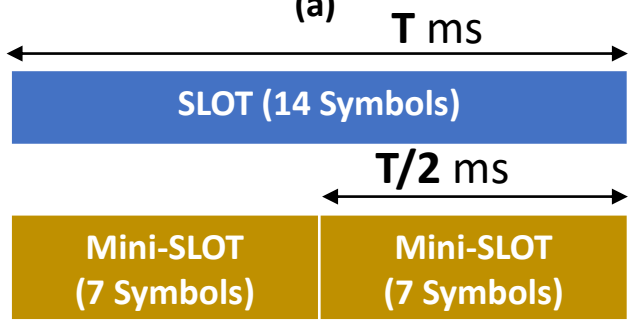

(b)

Demonstration of (a) Slot-Based subframe and (b) Mini-Slot based subframe.

μ	N_{symb}^{slot}	$N_{slot}^{frame,\mu}$	$N_{slot}^{subframe,\mu}$
0	14	10	1
1	14	20	2
2	12/14	40	4
3	14	80	8
4	14	160	16

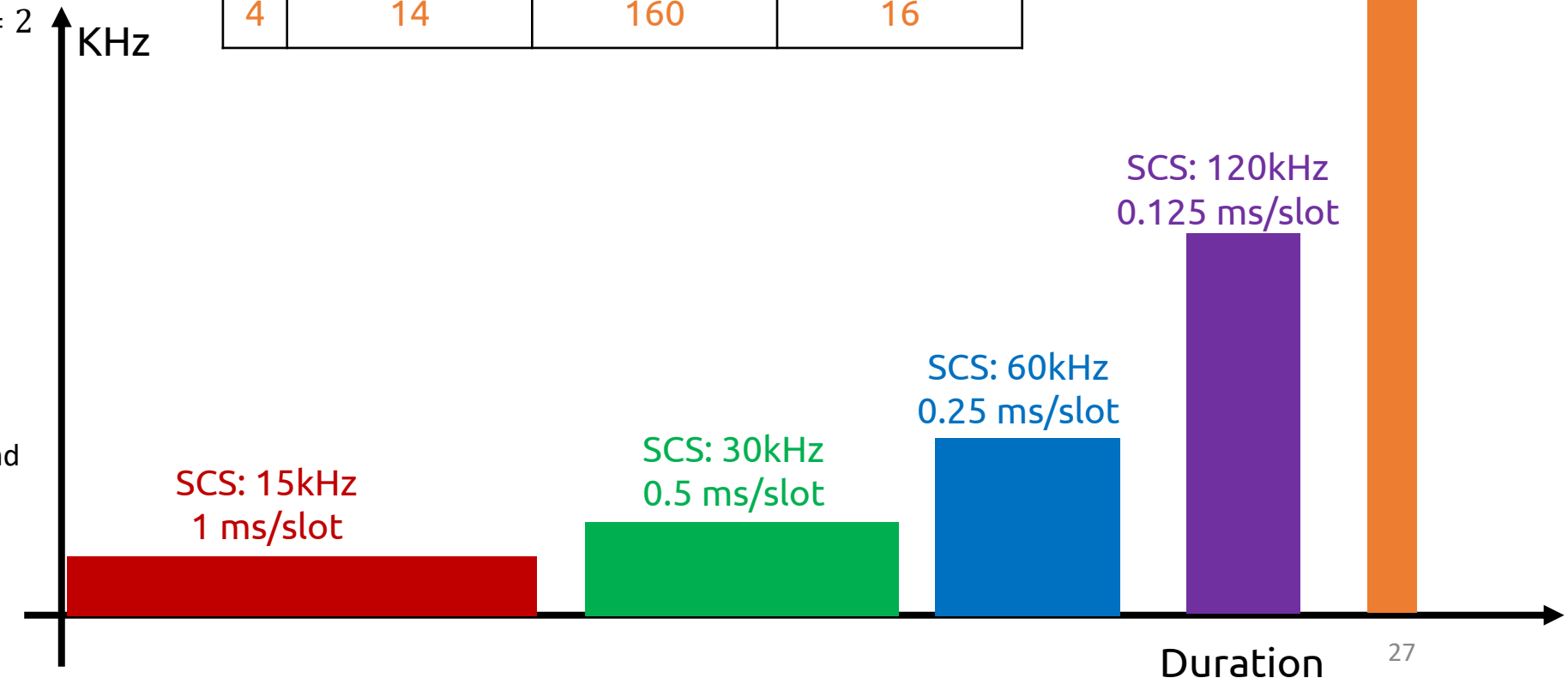

Numerology and Frame Structure: Design Aspects

Factors involved in numerology selection:

There are many factors involved in such decisions and **cell-size** and **achievable latency** are strongly related to the carrier frequency.

It is noted that the low latency can also be achieved in larger cells using wider subcarrier spacing. However, this may incur a performance penalty in terms of reliability or throughput.

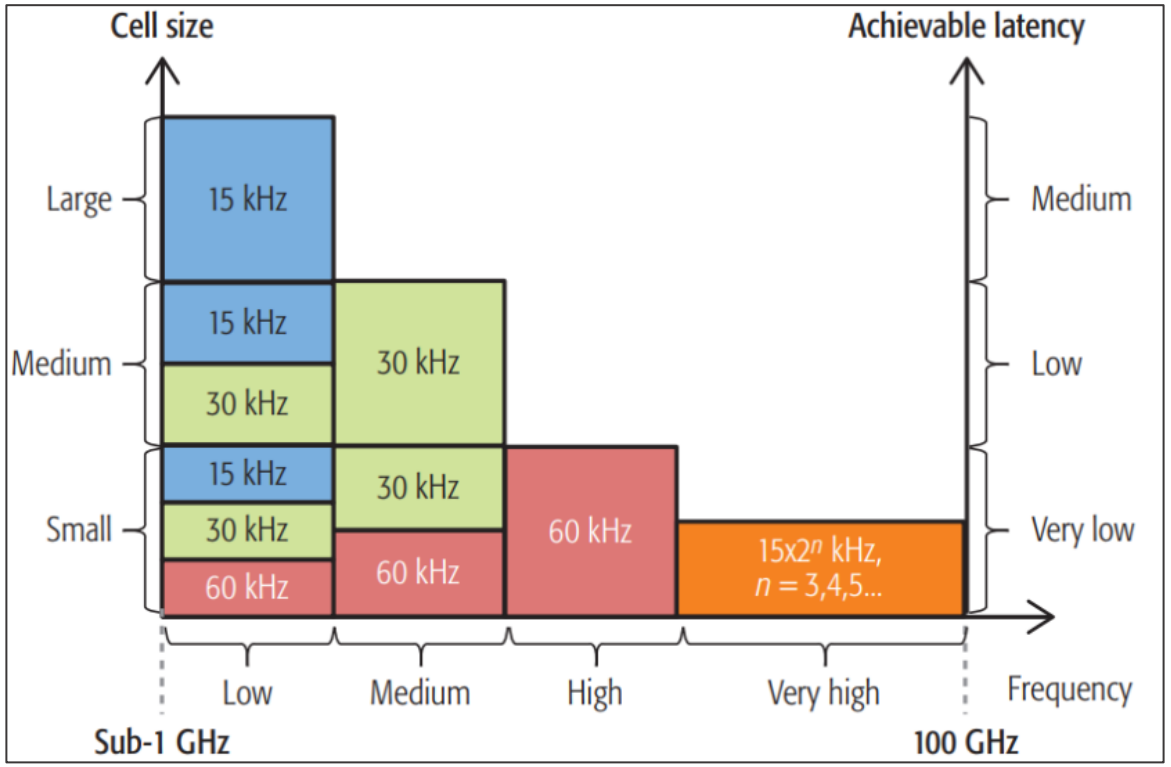

OFDM numerology design for wide range of carrier frequencies, deployment types, and application latency requirements using regular slots [X].

	Sub-6 GHz	mmWave
SCS (MHz)	5/10/15/20/25/40/50/60/80/100	50/100/200/400
BW per carrier (KHz)	15/30/60	60/120/240

Recommended SCS values for different bands [Y].

[X] Zaidi, Ali A., et al. "**OFDM numerology design for 5G new radio to support IoT, eMBB, and MBSFN**", *IEEE Communications Standards Magazine* 2.2 (2018): 78-83.
[Y] **3GPP TS 38.101-1 V17.0.0**, (Release 17)

Impact of Service Requirements on Numerology Parameters

Service Type	Key Requirement	If any, key necessities for numerology design				
		η_{spectrul}	Δf	# of subcarriers	TTI	T_{CP}
eMBB	High Throughput	High				
	High Data Rate	High				
mMTC	Support for small data bursts		Large			
	High energy efficiency			Low		
uRLLC	Low latency				Short	
	High reliability		Large			Long

Service requirements and their impacts on the numerology parameters [X].

A few observations and an example:

For C-V2X communications (uRLLC) Service:

- TTI duration Should be short because to satisfy low latency of mission-critical applications
- Packet length in this type of service is short, therefore packets within TTI window can be transmitted.
- T_{CP} should be long to avoid overlap in symbols, which results high reliability.

[X] Yazar, Ahmet, and Hüseyin Arslan. "**A flexibility metric and optimization methods for mixed numerologies in 5G and beyond**", *IEEE Access* 6 (2018): 3755-3764.

Impact of User Requirements on Numerology Parameters

Impairment Type	Important Constraint	If any, key necessities for numerology design				
		η_{spectrul}	Δf	# of subcarriers	TTI	T_{CP}
Channel	Doppler		Large			
	Multipath					Long
	pathloss			Low		
RF Hardware	Phase noise					
	Frequency offset		Large			
	PA none-Linearity		Large	Low		

User requirements and their impacts on on the numerology parameters [X].

Some reasons for those requirements:

For Doppler, multipath, and pathloss impairments, respectively,:

- SCS frequency should be large enough to capture fluctuations in Doppler shift.
- T_{CP} should be long to combat overlapping on symbols
- Pathloss has direct relationship with frequency. Lower frequency means lower pathloss, and since the frequency has direct relationship with the number of subcarriers, therefore, reduction in the number of subcarriers yields reduction in pathloss.

[X] Yazar, Ahmet, and Hüseyin Arslan. "**A flexibility metric and optimization methods for mixed numerologies in 5G and beyond**", *IEEE Access* 6 (2018): 3755-3764.

Impact of User/Service Requirements on Numerology Parameters

Service Requirements:

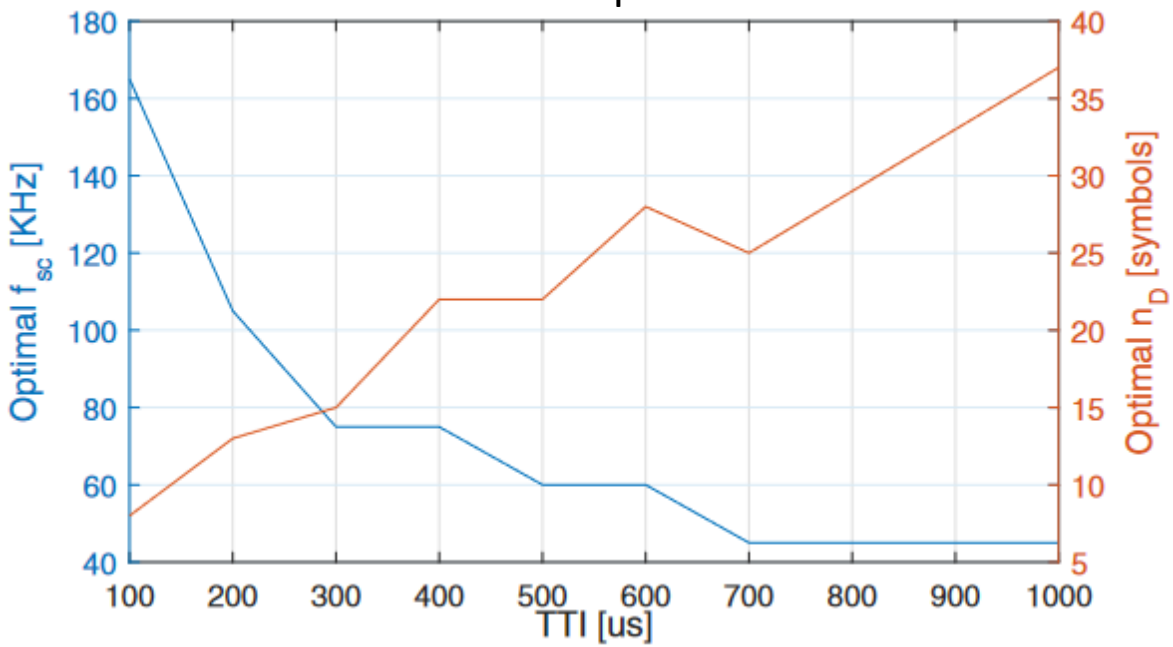

Optimal SCS frequency and number of symbols versus TTI [Y].

Doppler impairment for user:

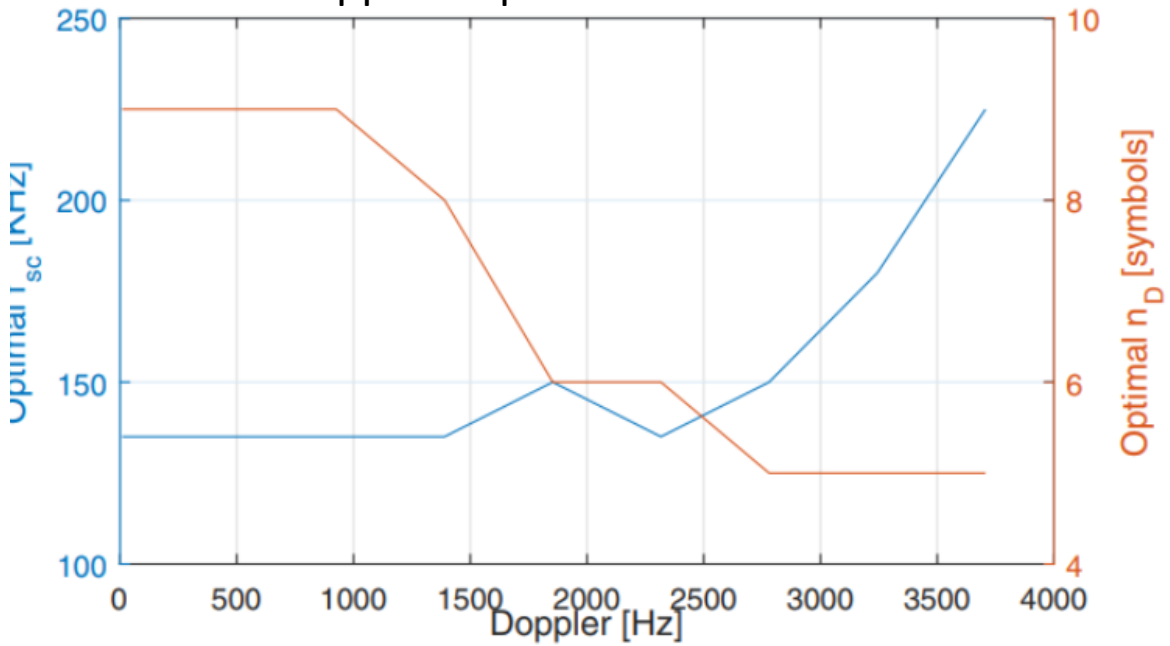

Optimal SCS frequency and number of symbols versus Doppler shift [Y].

Some explanations for the above figures:

For TTI:

- Lower TTI requires higher bandwidth (SCS) and to have lower TTI, number of symbols should be small.

For Doppler impairment:

- Same explanations of the previous slide are valid.

[Y] Ibrahim, Mohamed, and Wen Xu. "**On numerology and capacity of the self-contained frame structure“**, *2016 IEEE Globecom Workshops (GC Wkshps)*. IEEE, 2016.

Some Challenges and Proposed Solutions

Inter Numerology Interference (INI)

- Multiple numerologies introduces non-orthogonality, causing interference between users belonging to different numerologies.

Symbol lengths among numerologies tend to vary due to the usage of different SCS which in turn makes the whole system unsynchronized in time domain.

Difficulty in achieving synchronization of OFDM symbols of different numerologies is one of the major drawbacks of multi-numerology systems.

However, if SCS of one numerology is integral multiple of the SCS of the other numerology, synchronization can be achieved over the so called least common multiplier (LCM) symbol duration.

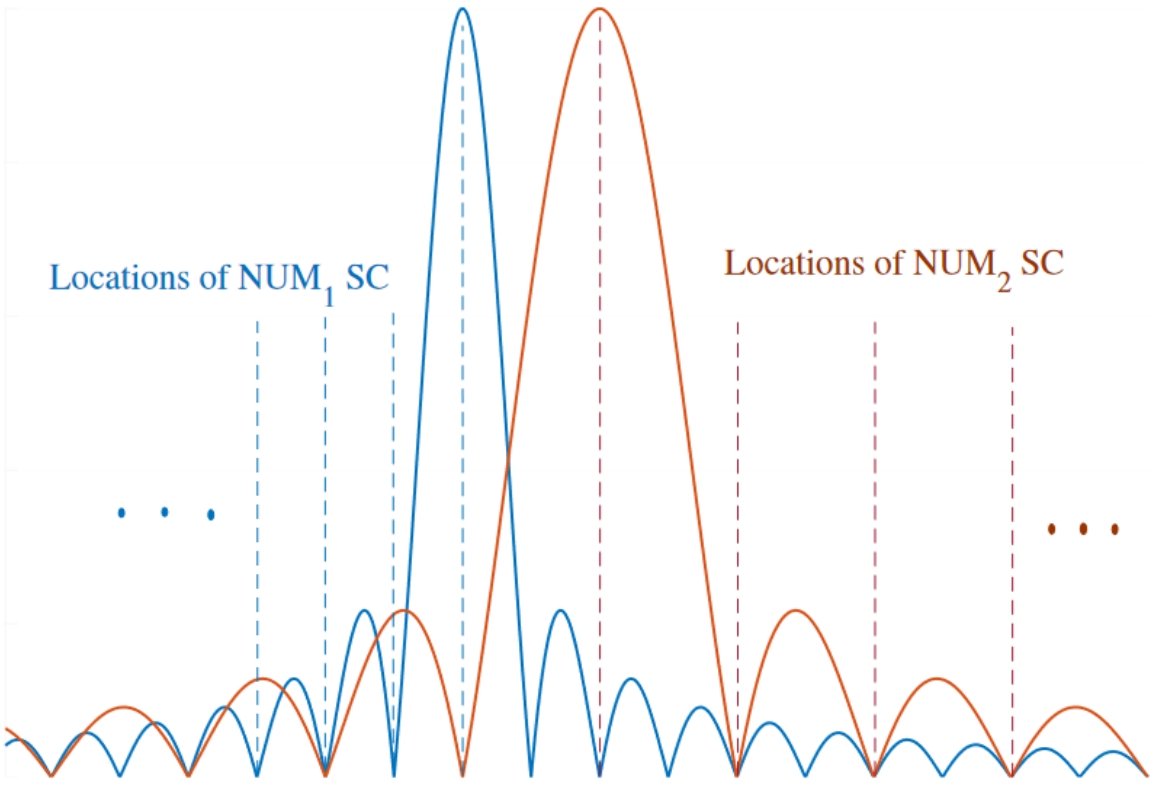

Multiplexed subcarriers of NUM1 (Δf_1= 15 kHz) and NUM2 (Δf_2= 30 kHz) at the transmitter (before composite signal) with guard band =2∗Δf_1. [X]

[X] Kihero, Abuu B., et al. "**Inter-numerology interference analysis for 5G and beyond**." *2018 IEEE Globecom Workshops (GC Wkshps)*. IEEE, 2018.

Some Challenges and Proposed Solutions: Filtering & Guard Band Design

CP and Guard Band Design Techniques

- Common CP case renders the multi-numerology system partially orthogonal while in the individual CP case, the system is totally non-orthogonal.

- Optimizing the GBs in the adjacent bands with respect to SCS, service requirement, and power offset between numerologies.

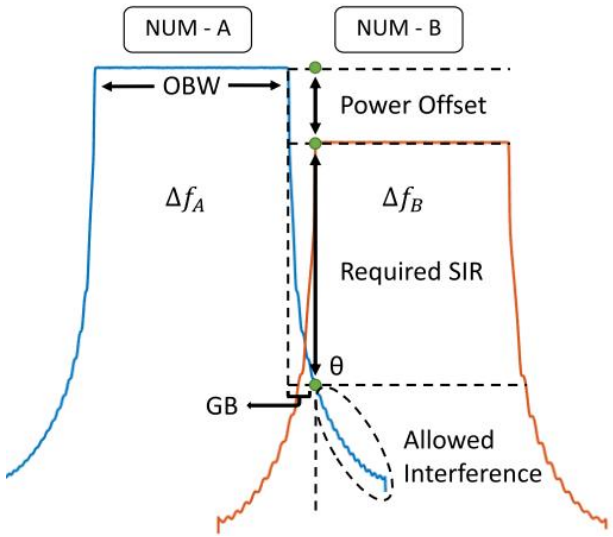

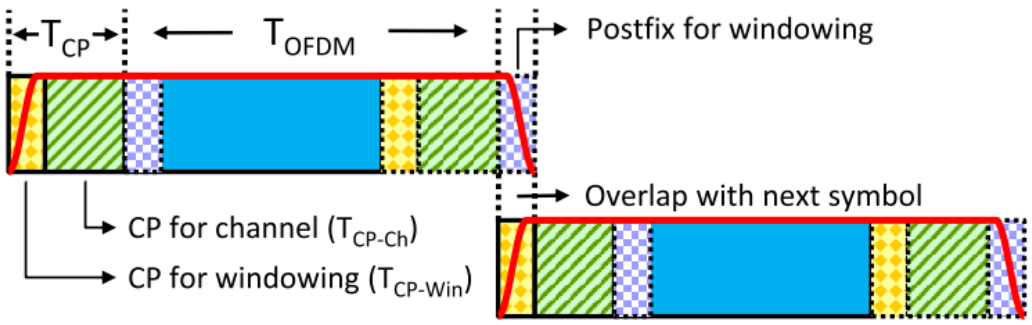

Adaptive guard band design [X].

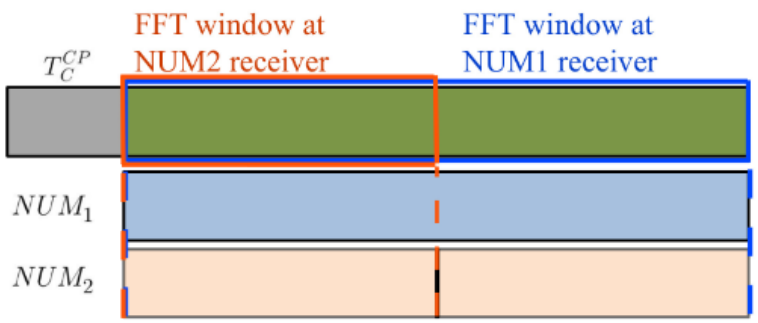

(a) Common CP case

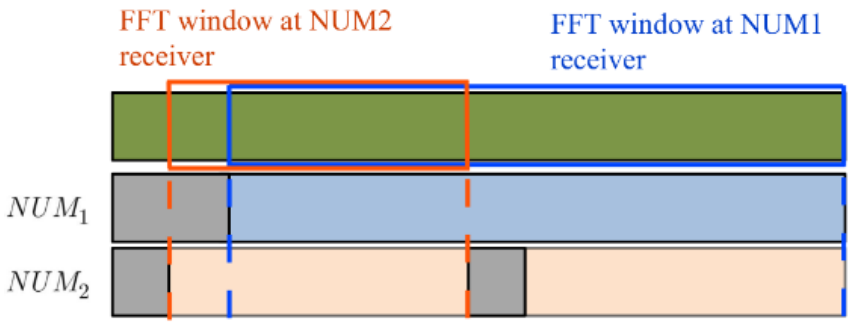

(b) Individual CP case

Illustration of FFT-window at the receiver of each numerology [Y].

[X] A. F. Demir and H. Arslan, "**Inter-numerology interference management with adaptive guards: A cross-layer approach**," *IEEE Access*, vol. 8, pp. 30 378–30 386, 2020.
[Y] Kihero, Abuu B., et al. "**Inter-numerology interference analysis for 5G and beyond**." *2018 IEEE Globecom Workshops (GC Wkshps)*. IEEE, 2018.

Some Challenges and Proposed Solutions: Scheduling in 5G NR vs. LTE

Scheduling in 5G NR is different:

Many interesting technologies such as beamforming, massive MIMO, SCS, dual connectivity, supporting wide range of end users in different categories of uRLLC, eMBB, and mMTC, all of these technologies makes 5G scheduling different from the LTE counterpart.

In the LTE system, the control region is occupied the whole bandwidth within a subframe, however, in 5G NR, control region is localized within bandwidth Symbols within a slot can be utilized in different ways for either UL or DL transmissions. However, in LTE, all symbols within the subframe should be used for UL (DL) if the subframe is allocated for UL (DL).

Similarity to LTE:

Similar to LTE, 5G has shared channel and control channel, in which we call this region Control Resource Set (**CORESET**)

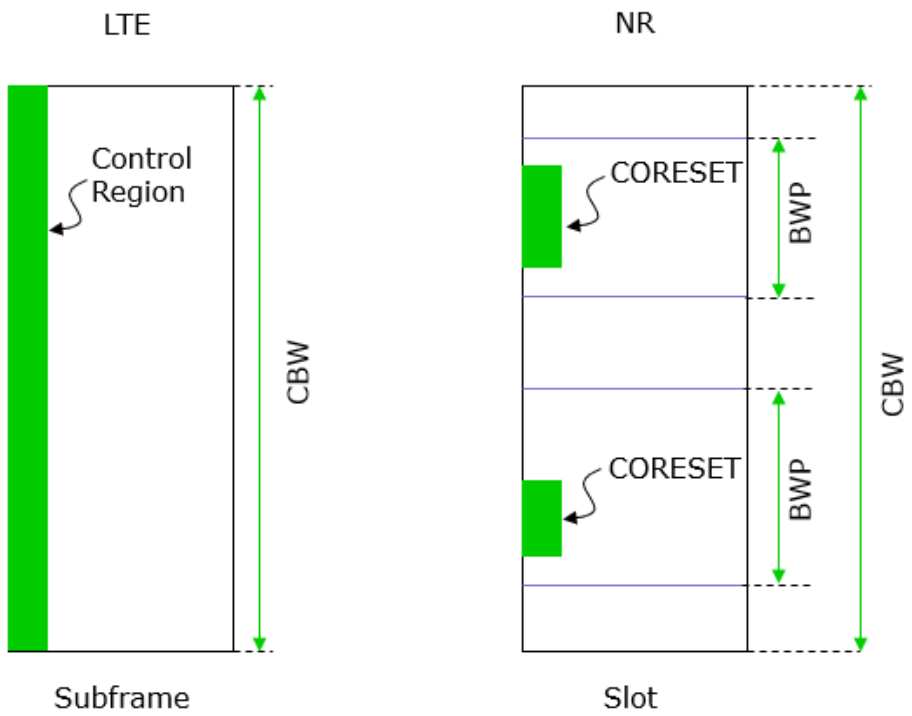

T. T. Nguyen, V. N. Ha, and L. B. Le, "Wireless scheduling for heterogeneous services with mixed numerology in 5g wireless networks," *IEEE Communications Letters*, vol. 24, no. 2, pp. 410–413, 2019
Photo from: https://www.sharetechnote.com/html/5G/5G_ResourceAllocationUnit.html

Some Challenges and Proposed Solutions: Scheduling in 5G NR

Scheduling in 5G NR is different:

- There are **NO fixed** UL/DL configurations as already been for the previous generations.
- Instead of predefined UL/DL configurations as in LTE configurations, 5G NR comes with the slot format
- **FDD** utilizes only slot format “0” (DL) or slot format “1” (UL), depending on the direction of the transmission
- For **TDD**, there are multiple ways that points this table.

Format	Symbol number in slot													
	0	1	2	3	4	5	6	7	8	9	10	11	12	13
0	D	D	D	D	D	D	D	D	D	D	D	D	D	D
1	U	U	U	U	U	U	U	U	U	U	U	U	U	U
2	X	X	X	X	X	X	X	X	X	X	X	X	X	X
…	…													
32	D	D	D	D	D	D	D	D	D	D	X	X	U	U
…	…													
61	D	D	X	X	X	X	U	D	D	X	X	X	X	U
62-254	Reserved													
255	UE determines the slot format for the slot based on TDD-UL-DL-ConfigurationCommon, or TDD-UL-DL-ConfigDedicated, if any, on detected DCI formats													

UL/DL allocations and slot formats in 5G NR; table is abstracted from [X]

[X] **3GPP TS 38.101-1 V17.0.0**, 3rd Generation Partnership Project; Technical Specification Group Radio Access Network; NR; User Equipment (UE) radio transmission and reception; Part 1: Range 1 Standalone (Release 17)

Concluding Remarks and Open Research Directions

- Joint modulation choice and numerology
- Efficient interference cancellation techniques
- Comprehensive INI analysis comprising all affecting factors is missing in the literature: Guard Band, Power offset, windowing, number of subcarriers, and SCS.

Massive MIMO

- MIMO à plus grande échelle (centaines / milliers d'antennes)

- Utilisation de composante à faible puissance et faible prix

- Meilleur réponse fréquentielle et spatialle du système

Pourquoi les utiliser?

- Pour atteindre les normes de la 5G
- Consommation plus base d'énergie
- Meilleur efficacité énergétique spectrale que les MIMO
- les atténuations subitent aurons moins des impacts importants sur la réception du signal.
- Robuste aux imperfections et aux bris d'équipements.

Coding and Energy efficiency

- Coding MRC
  - Low complexity
  - Linear
  - Does not consider multiuser interference
- Coding ZF
  - Complement orthogonal pour éviter multiuser interference
- MMSE at receiver
  - Better performance then ZF
  - Needs noise variance

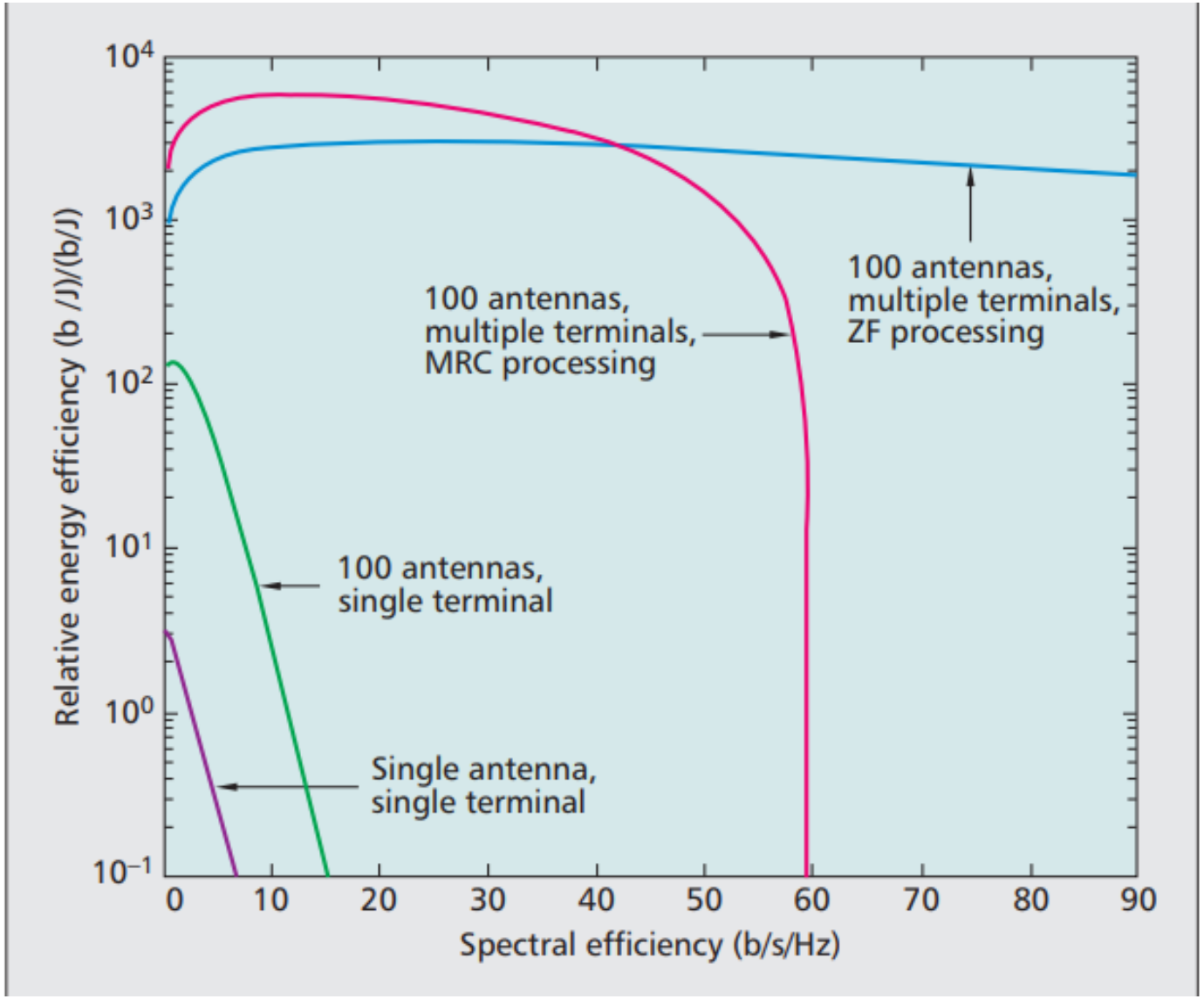

Erik G. Larsson,Massive MIMO for Next Generation Wireless Systems, IEEE, 2020

Connections D2D

- Connection peer-to-peer ou device-to-device
- Permet de facilité la connectivité entre un grand nombre d'usagers
- Deviens de plus en plus utile avec la croissance d'usagers

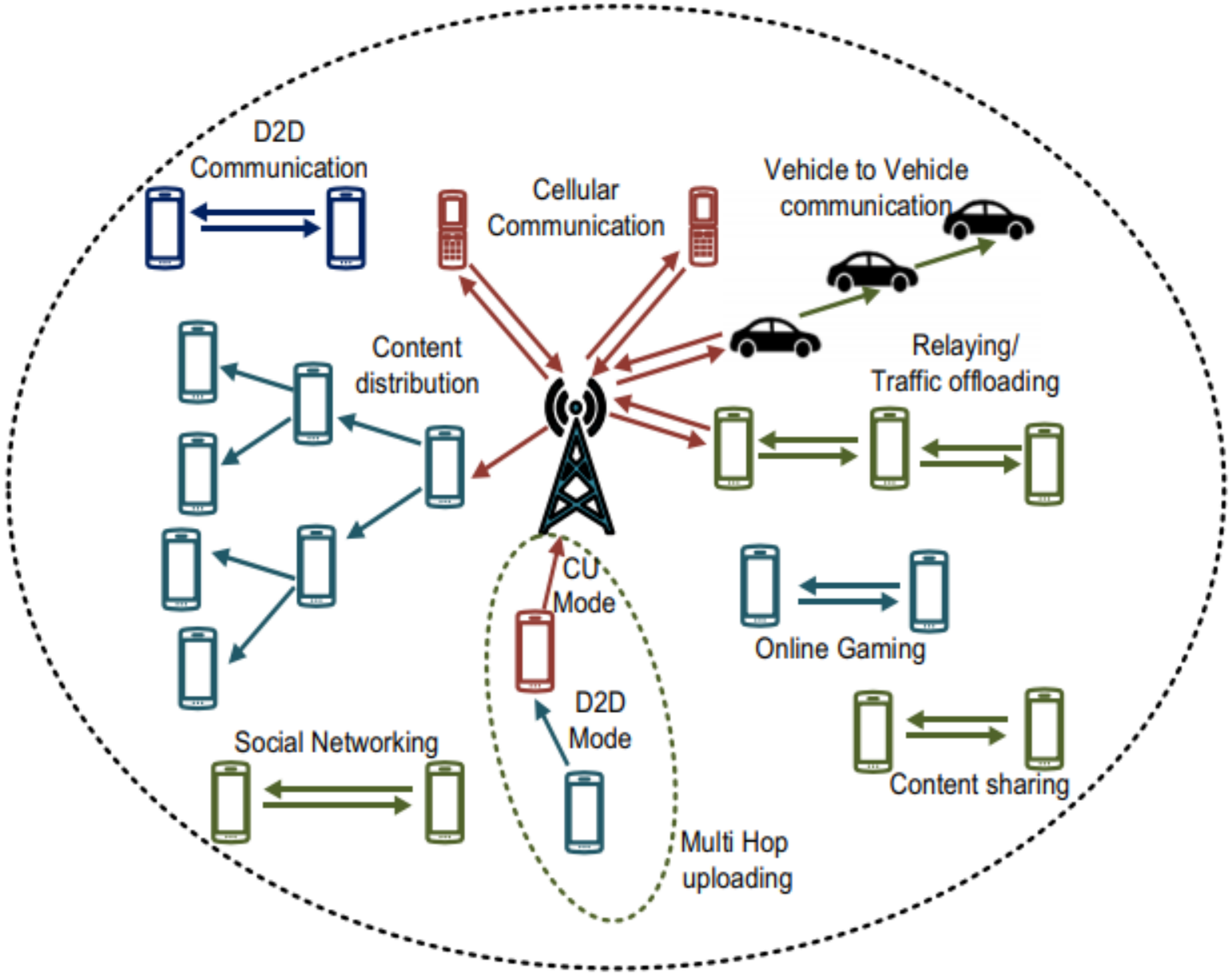

Steffi Jayakumar, A review on resource allocation techniques in D2D communication for 5G and B5G technology, Springer Science+Business Media, 2020

Connections D2D: Avantages

- Diminution de la latence (applications temps réel favorisés)
- Transmission rapide des données
- Diminuer la charge des stations de bases
- Augmentation de l'efficacité énergétique (causé par les petites distances)

Connections D2D: Classifications

- Le réseau est maintenant diviser en deux parties : partie macro et une partie usager.

- Macro : tous type de communication standard avec l'utilisation d'une station de base pour effectuer l'envoi des informations

- Usager : Type de connection D2D.

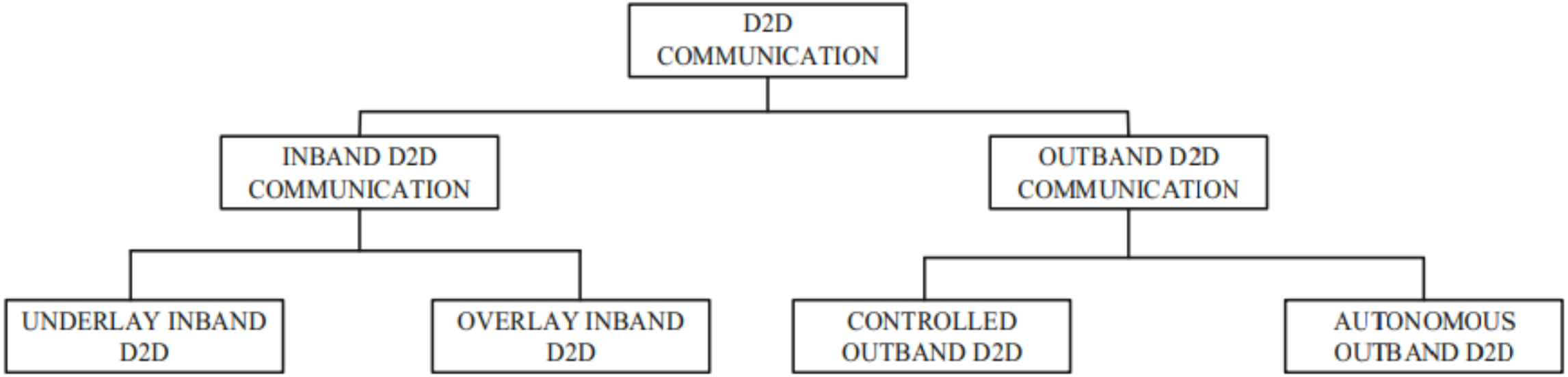

Inband D2D communication:

- Bande de fréquence de standard
- Meilleur control du spectre
- Plus facile d'effectuer la gestion d'interférence entre usagers

Steffi Jayakumar, A review on resource allocation techniques in D2D communication for 5G and B5G technology, Springer Science+Business Media, 2020

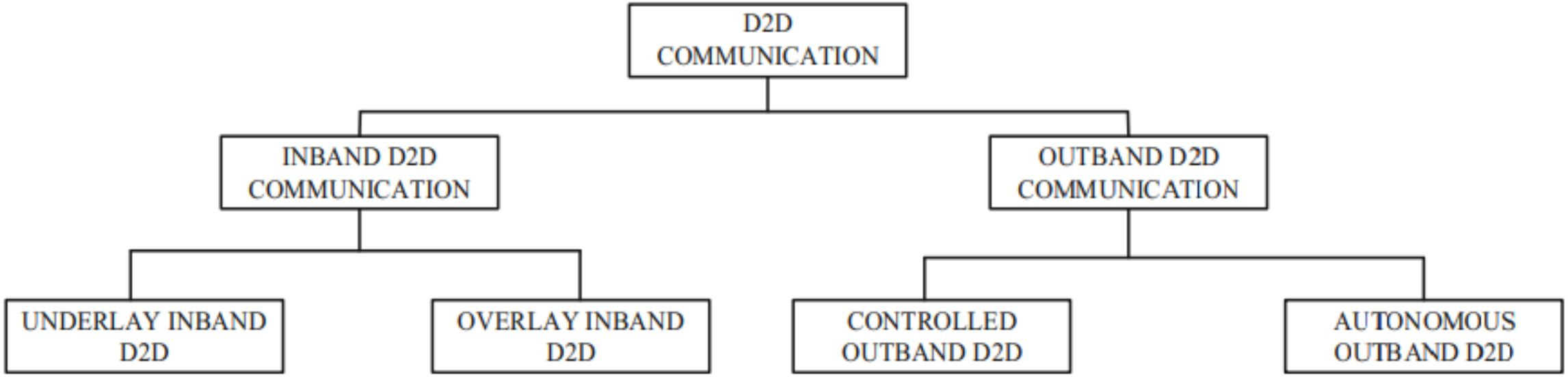

Outband D2D communication:

- Bande de fréquence de non standard (comme bluethooth)
- Pas d'interférence avec les liens macros
- Gestion des interférence plus difficiles

Steffi Jayakumar, A review on resource allocation techniques in D2D communication for 5G and B5G technology, Springer Science+Business Media, 2020

Connections D2

- Avenir de l'IOT (interne
- Cas d'urgence
- Peut être utiliser comr

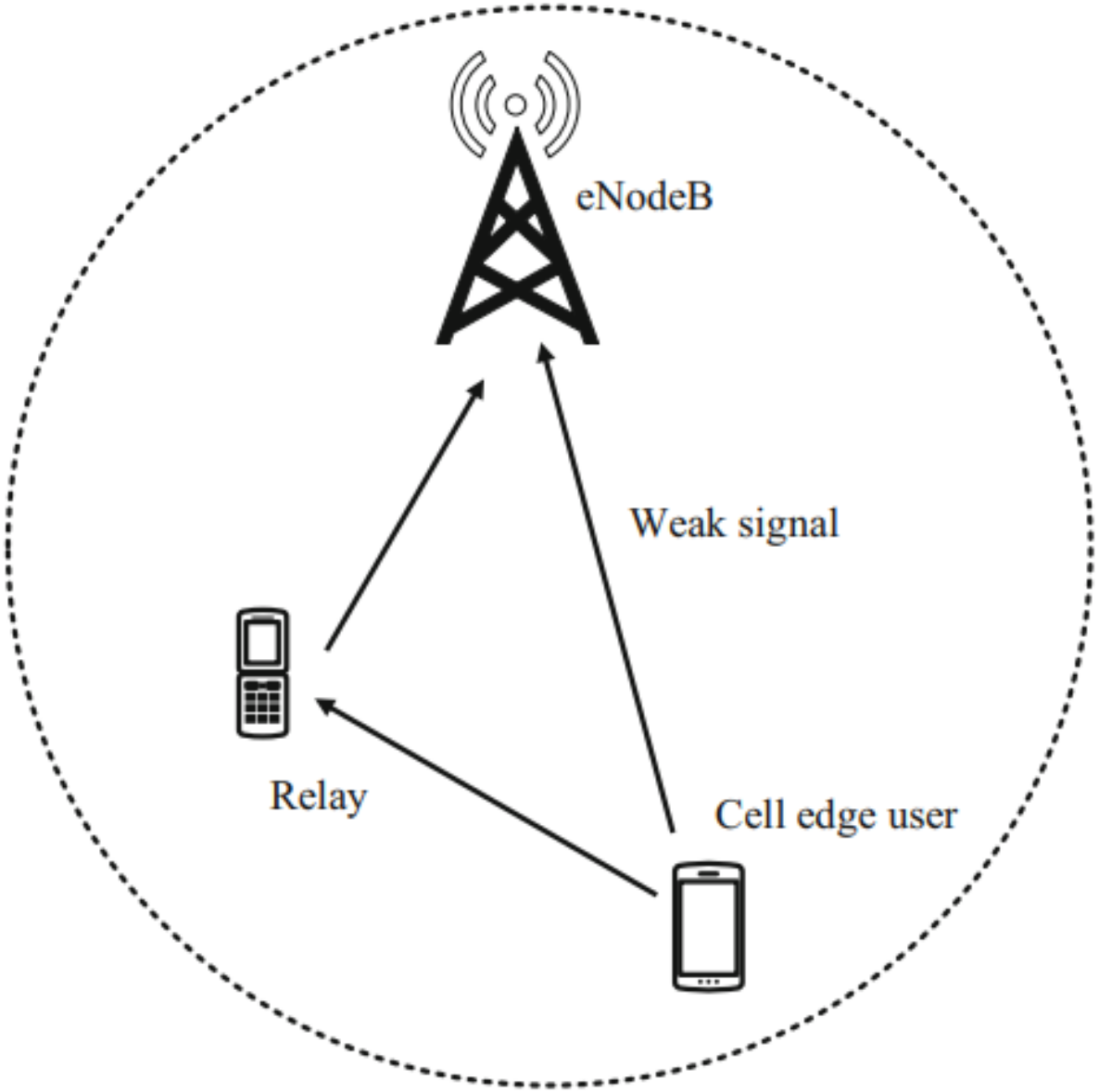

Steffi Jayakumar, A review on resource allocation techniques in D2D communication for 5G and B5G technology, Springer Science+Business Media, 2020

Connections D2D: Problèmes

- Détection difficile des usagers disponible pour la connection D2D

- Le signal de détection des usagers peut créer des interférences avec les autres usagers qui utilise le réseau

- La mobilité des usagers fait en sorte que le canal des usagers changent assez drastiquement et rapidement

Beamforming

- Integral component of 5G
- Use of multiple transmtting/receiving antennas to create beams directed towards UE/BS.
- Can be easily applied in mmWave due to smaller antennas
- Some benefits of beamforming
  - Improved energy efficiency
  - Increased security, decreased interference
- Classification of techniques
  - Analog vs. Digital vs. Hybrid
  - Adaptive vs. Switched

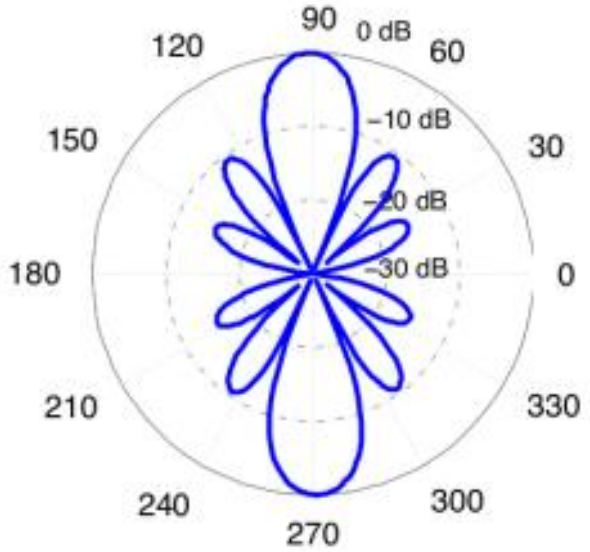

From: Energy-Efficient Transmission for Beamforming in Wireless Sensor Networks

Analog vs. Digital Beamforming

- Analog
  - Low Cost
  - Control phase with phase shifters
  - Performed in RF
  - Limited beam control

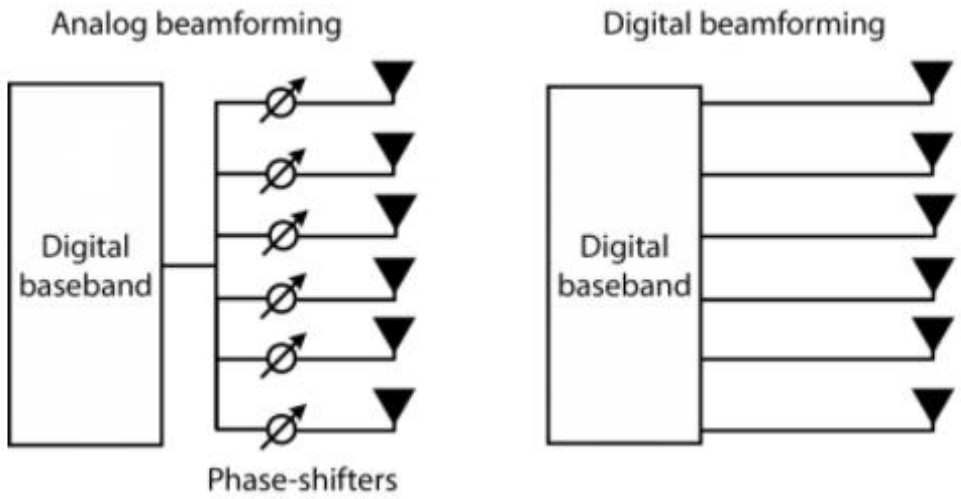

- Digital
  - Expensive
  - Requires separate RF translators and ADCs
  - Performed in baseband
  - High beam control

https://ma-mimo.ellintech.se/2017/10/03/what-is-the-difference-between-beamforming-and-precoding/

e.g: Analog Beamforming Receiver

- Receiving antenna
- Phase shifters (+ possible, less flexible, amplitude control)
- Power combiner and one output

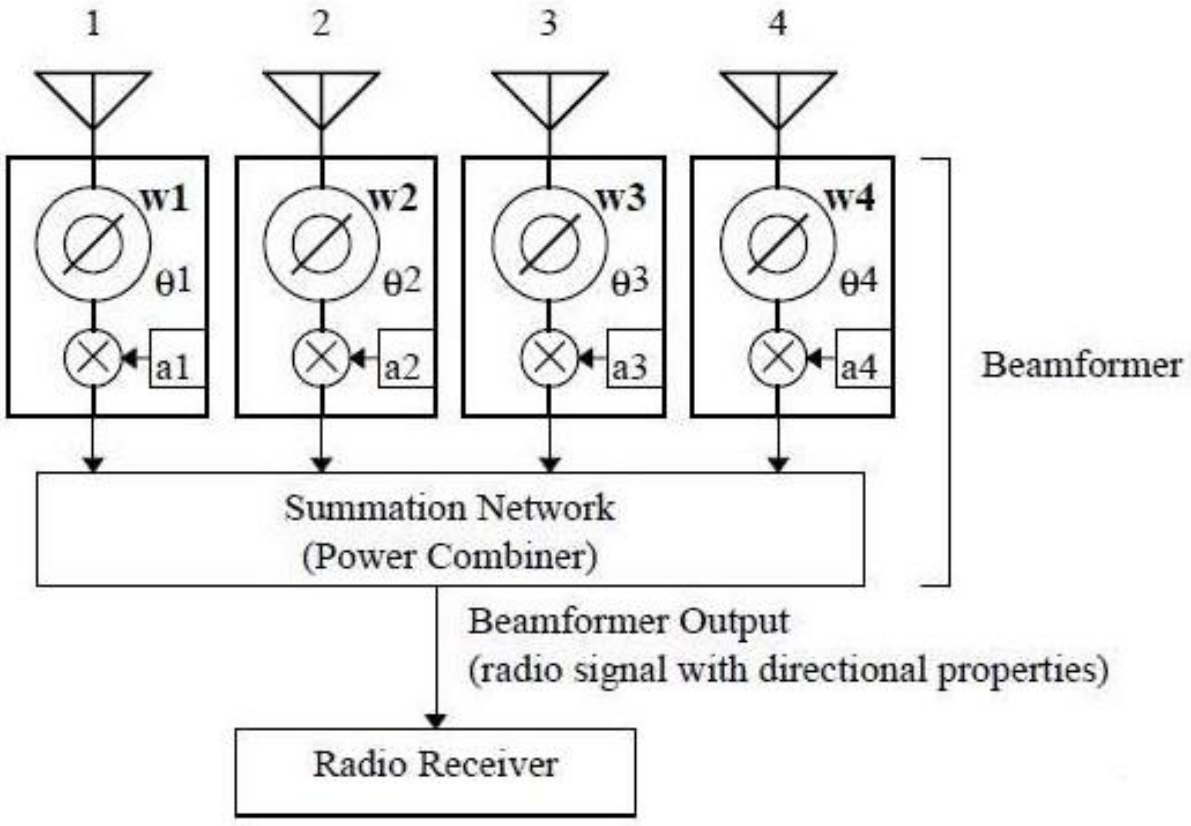

https://www.rfwireless-world.com/Terminology/Analog-Beamforming-vs-Digital-Beamforming.html

e.g: Digital Beamforming Receiver

- RF Translator: Converts from RF to IF
- ADC
- DDC: Converts from IF to baseband
- Signal multiplied by weights
- Output the summation

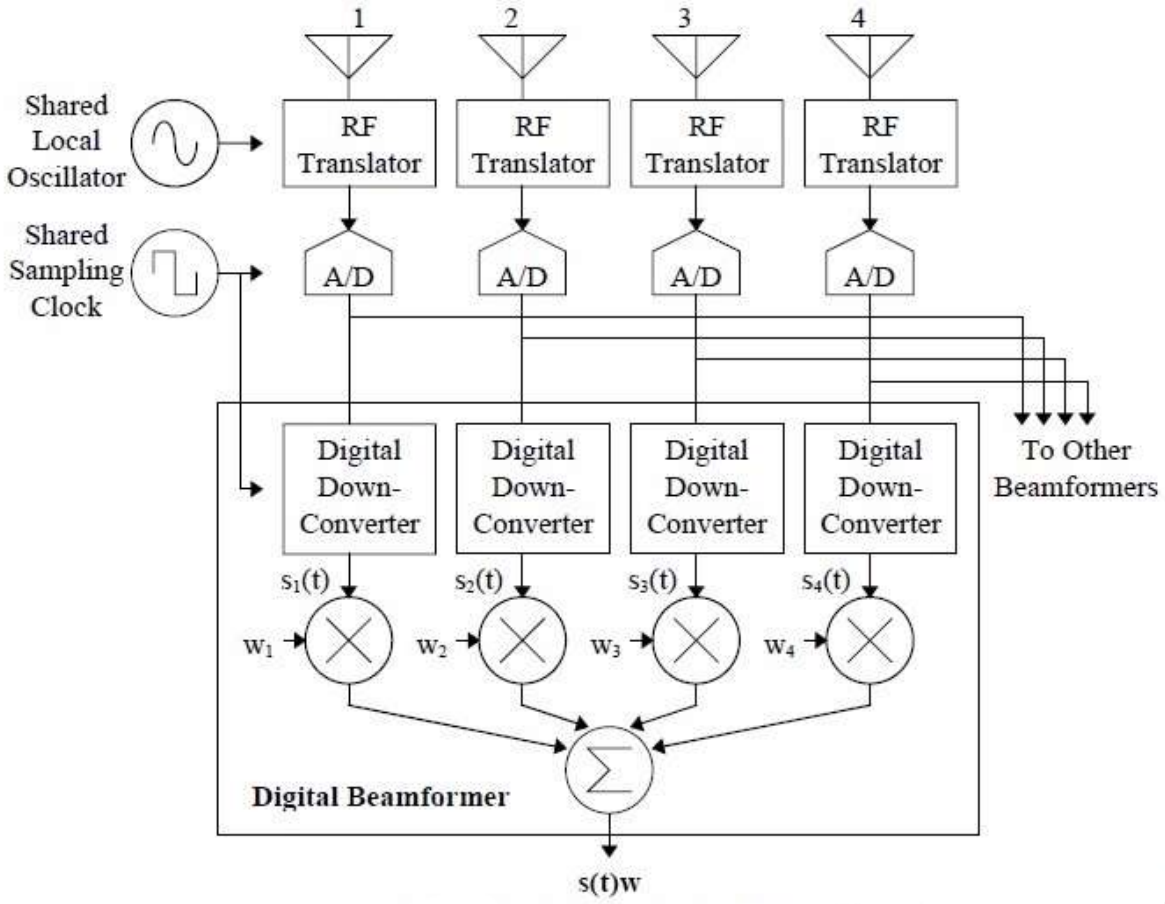

Hybrid Beamforming

- Middle ground between analog and digital
- Digital part provides control over the baseband signal
- Analog part aims to reduce the number of ADCs by adding less expensive RF chains
- More flexibility than analog and less expensive than digital

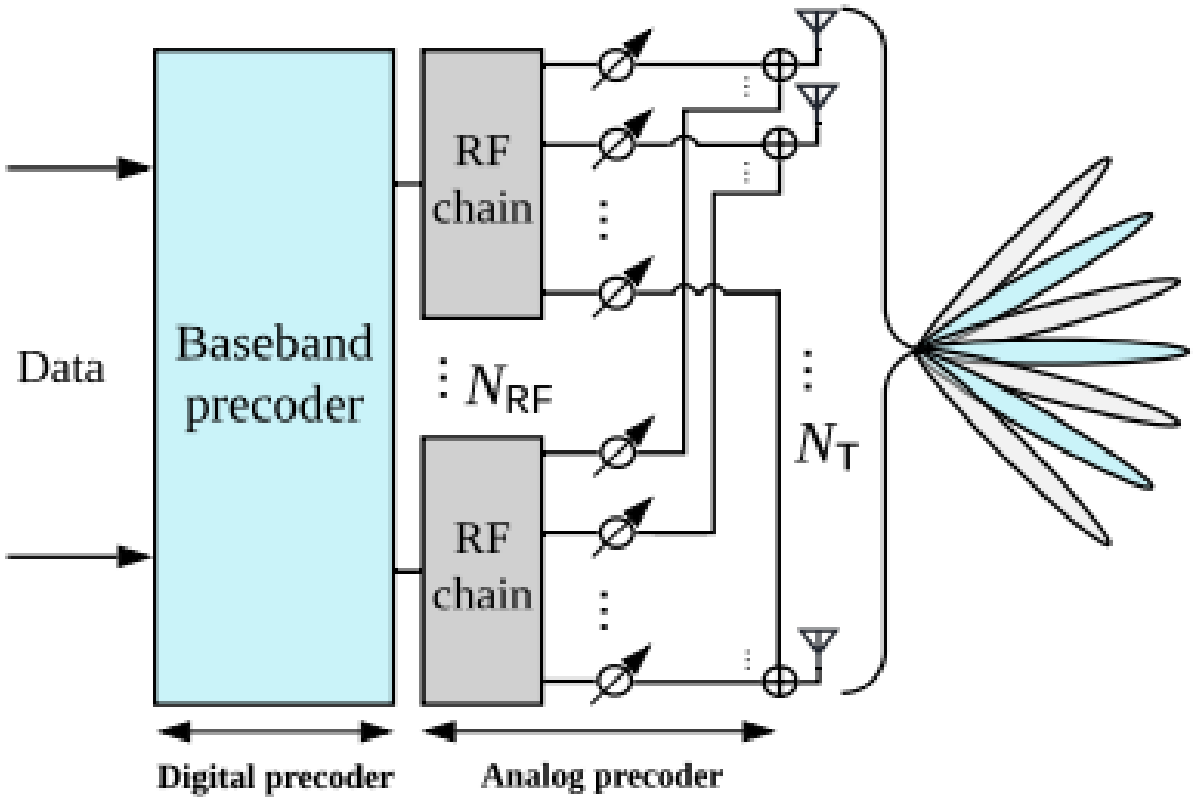

From: Unsupervised Deep Learning for Massive MIMO Hybrid Beamforming

Switched vs. Adaptive Beamforming

- Switched
  - Predefined beams
  - Some users may not have a dedicated beam (Interference)
  - Simple implementation and algorithms + Inexpensive

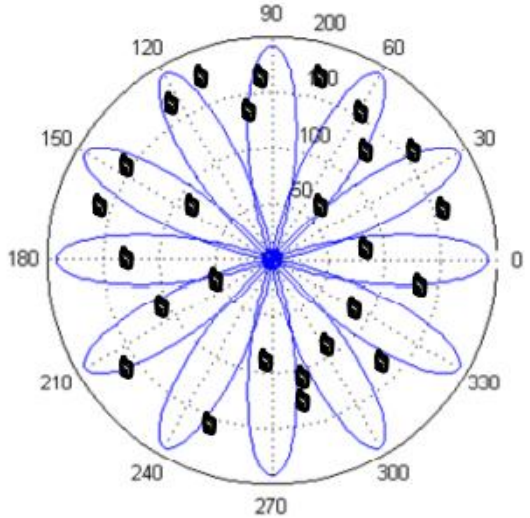

- Adaptive
  - Calculation of beams
  - Each user served by a dedicated beam
  - Larger coverage area
  - Expensive and complex algorithms

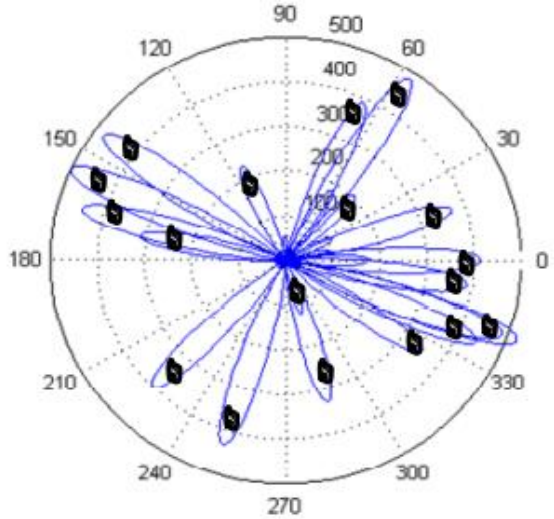
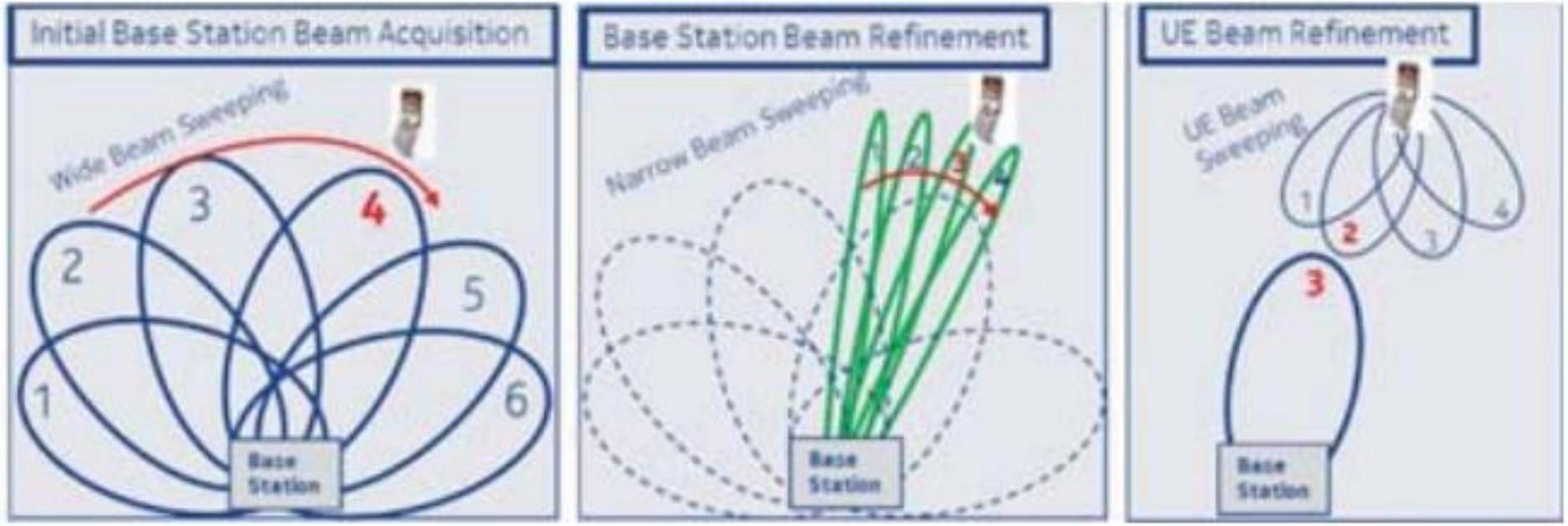
Sample Beam Management Algorithm