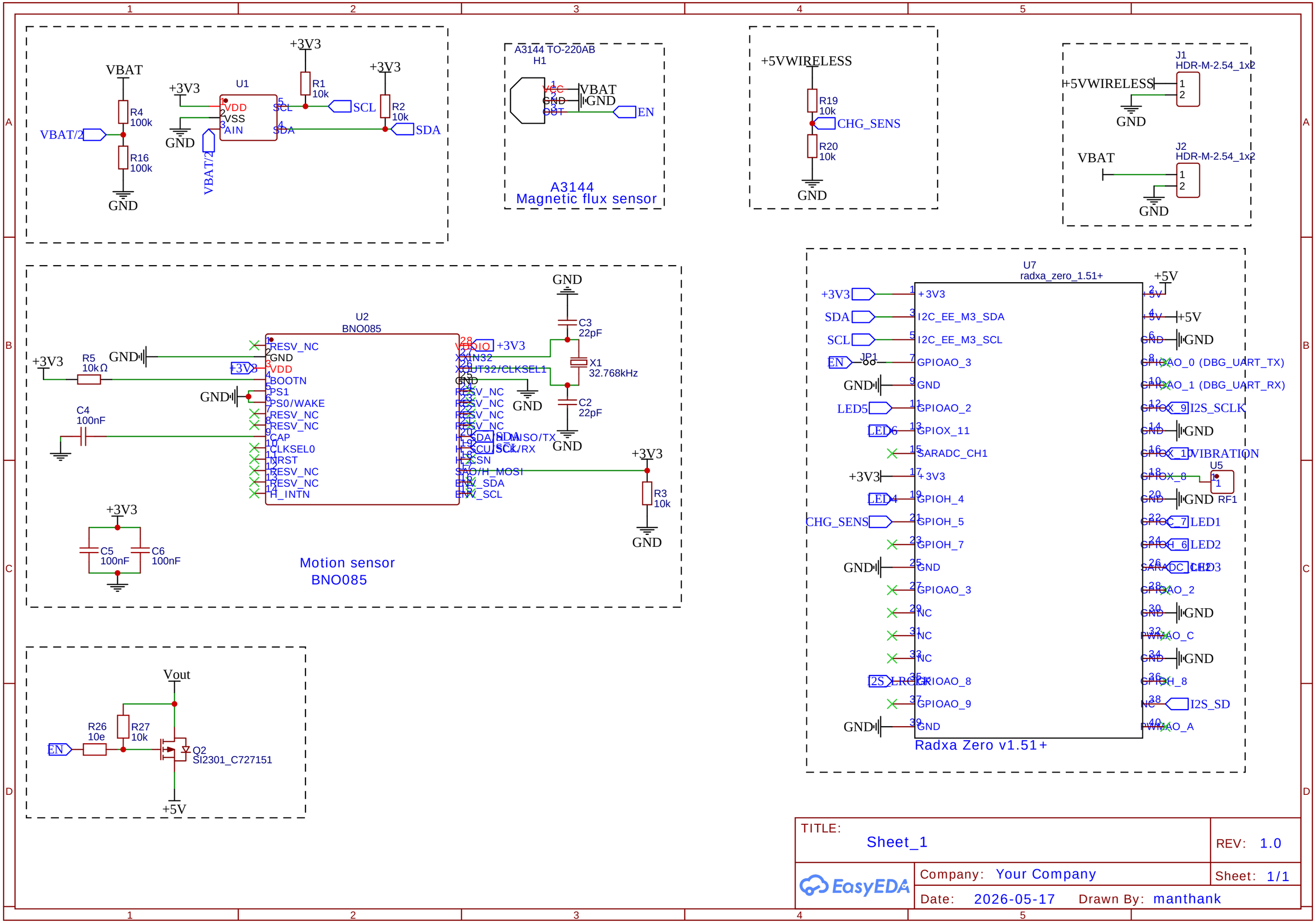

TITLE: Sheet_1	REV: 1.0
EasyEDA	Company: Your Company
	Sheet: 1/1
	Date: 2026-05-17 Drawn By: manthank

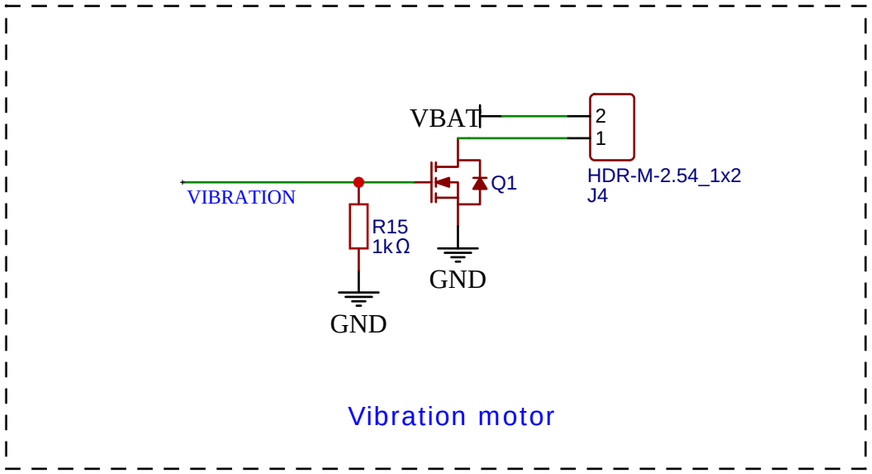

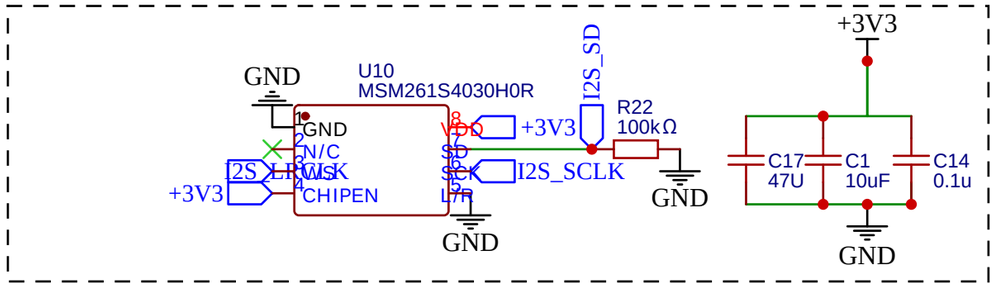

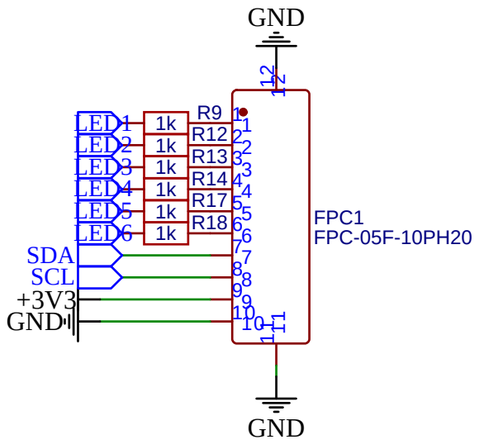

TITLE: Sheet_2		REV: 1.0
EasyEDA	Company: Your Company	Sheet: 1/1
	Date: 2026-05-17 Drawn By: manthank	

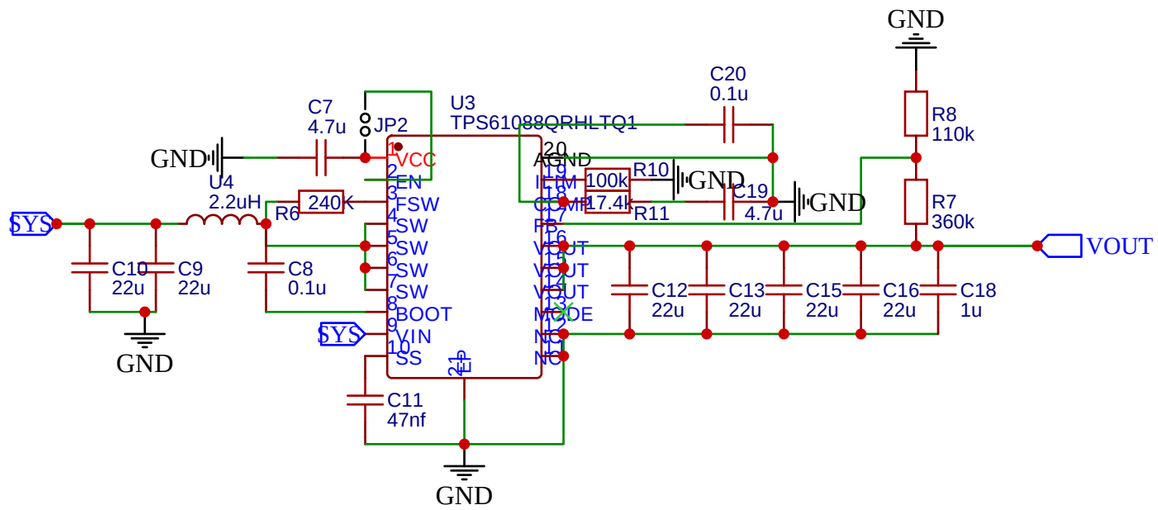

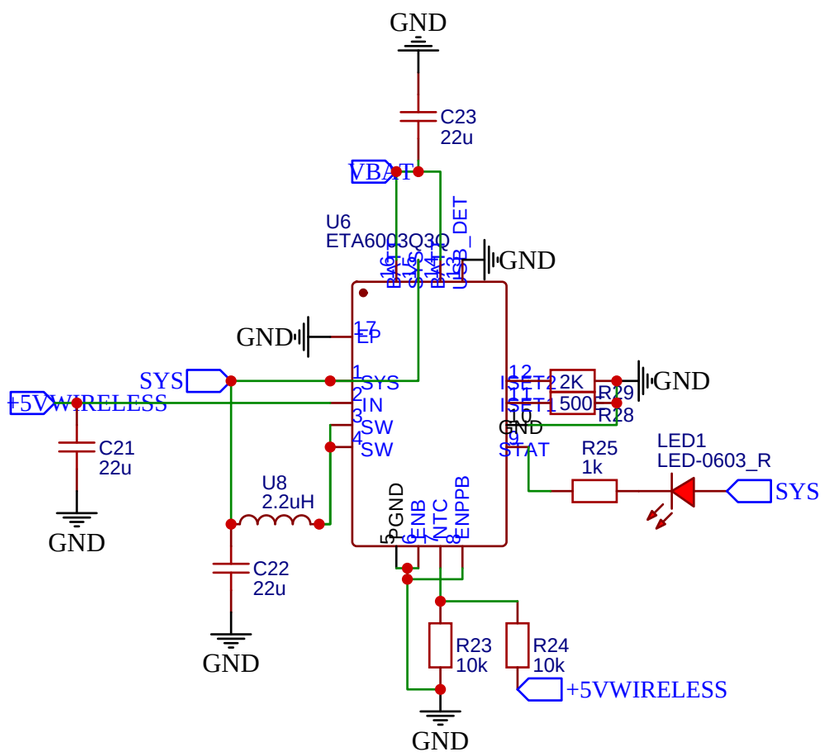

TITLE: Sheet_3		REV: 1.0
EasyEDA	Company: Your Company	Sheet: 1/1
	Date: 2026-05-17 Drawn By: manthank	