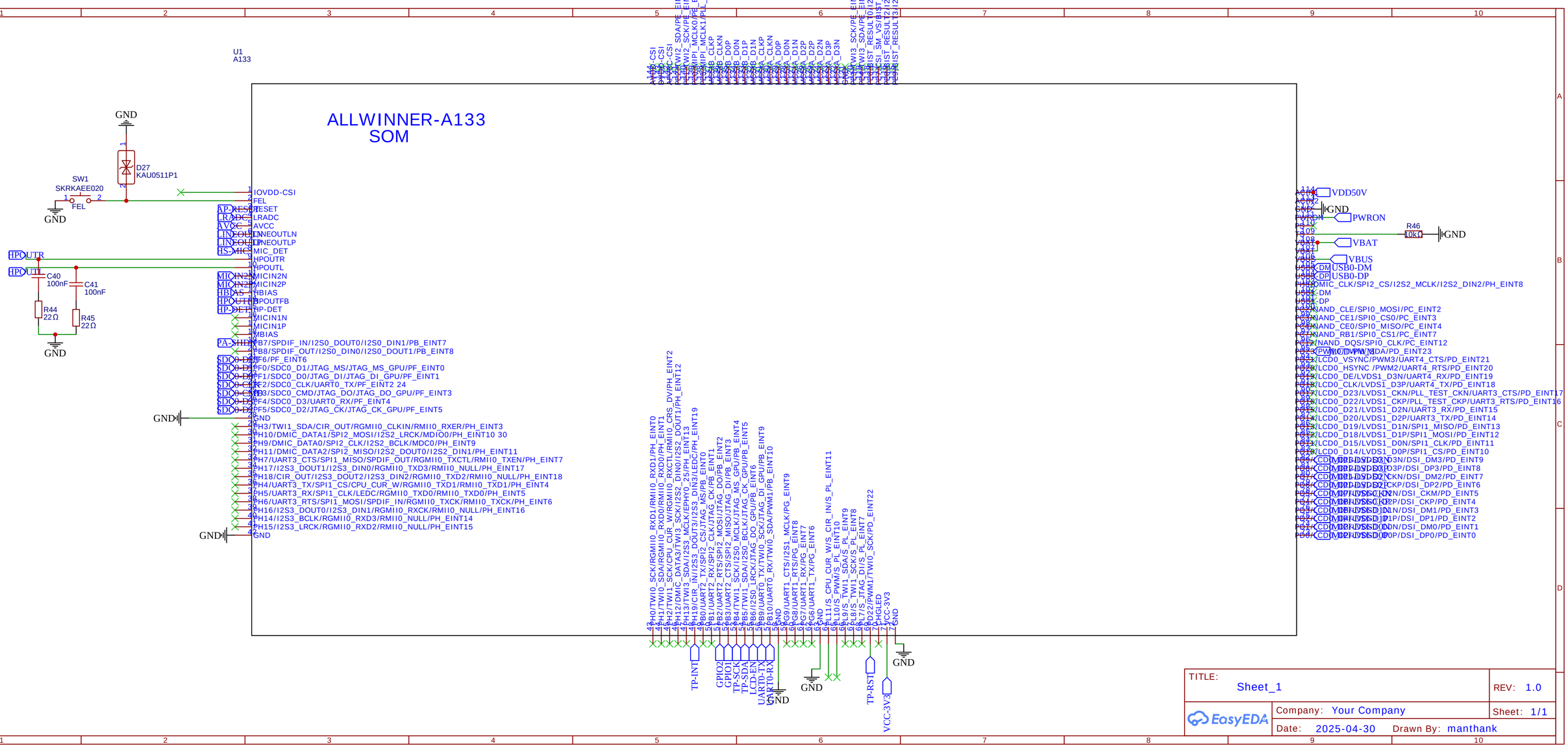
U1
A133
ALLWINNER-A133
SOM
GND
D27
KAU0511P1
SW1
SKRKAEE020
FEL
IOVDD-CSI
AP-RESET
LRADC
AVCC
LINEOUTLN
LINEOUTLP
HS-MIC
MIC_DET
HPOUTR
HPOUTL
C40
100nF
C41
100nF
R44
22Ω
R45
22Ω
MICIN2N
MICIN2P
HBIAS
HPOUTFB
HP-DET
MICIN1N
MICIN1P
PA-SHDN
SDC0-D3
SDC0-D2
SDC0-D1
SDC0-D0
SDC0-CLK
SDC0-CMD
SDC0-D3
SDC0-D2
TP-INT1
GPIO2
GPIO1
TP-SDA
TP-SCL
LCD-EN
UART0-TX
UART0-RX
TP-RST
VCC-3V3
VDD50V
PWRON
R46
10kΩ
VBAT
VBUS
USB0-DM
USB0-DP
DMIC_CLK/SPI2_CS/I2S2_MCLK/I2S2_DIN2/PH_EINT8
NAND_CLE/SPI0_MOSI/PC_EINT2
NAND_CE1/SPI0_CS0/PC_EINT3
NAND_CE0/SPI0_MISO/PC_EINT4
NAND_RB1/SPI0_CS1/PC_EINT7
NAND_DQS/SPI0_CLK/PC_EINT12
LCD0_VSYNC/PWM3/UART4_CTS/PD_EINT21
LCD0_HSYNC /PWM2/UART4_RTS/PD_EINT20
LCD0_DE/LVDS1_D3N/UART4_RX/PD_EINT19
LCD0_CLK/LVDS1_D3P/UART4_TX/PD_EINT18
LCD0_D23/LVDS1_CKN/PLL_TEST_CKN/UART3_CTS/PD_EINT17
LCD0_D22/LVDS1_CKP/PLL_TEST_CKP/UART3_RTS/PD_EINT16
LCD0_D21/LVDS1_D2N/UART3_RX/PD_EINT15
LCD0_D20/LVDS1_D2P/UART3_TX/PD_EINT14
LCD0_D19/LVDS1_D1N/SPI1_MISO/PD_EINT13
LCD0_D18/LVDS1_D1P/SPI1_MOSI/PD_EINT12
LCD0_D15/LVDS1_D0N/SPI1_CLK/PD_EINT11
LCD0_D14/LVDS1_D0P/SPI1_CS/PD_EINT10
LVDS1_D3N/DSI_DM3/PD_EINT9
LVDS1_D3P/DSI_DP3/PD_EINT8
LVDS1_CKN/DSI_DM2/PD_EINT7
LVDS1_CKP/DSI_DP2/PD_EINT6
LVDS1_D2N/DSI_CKM/PD_EINT5
LVDS1_D2P/DSI_CKP/PD_EINT4
LVDS1_D1N/DSI_DM1/PD_EINT3
LVDS1_D1P/DSI_DP1/PD_EINT2
LVDS1_D0N/DSI_DM0/PD_EINT1
LVDS1_D0P/DSI_DP0/PD_EINT0
TITLE:
Sheet_1
REV: 1.0
Company: Your Company
Sheet: 1/1
Date: 2025-04-30
Drawn By: manthank
EasyEDA

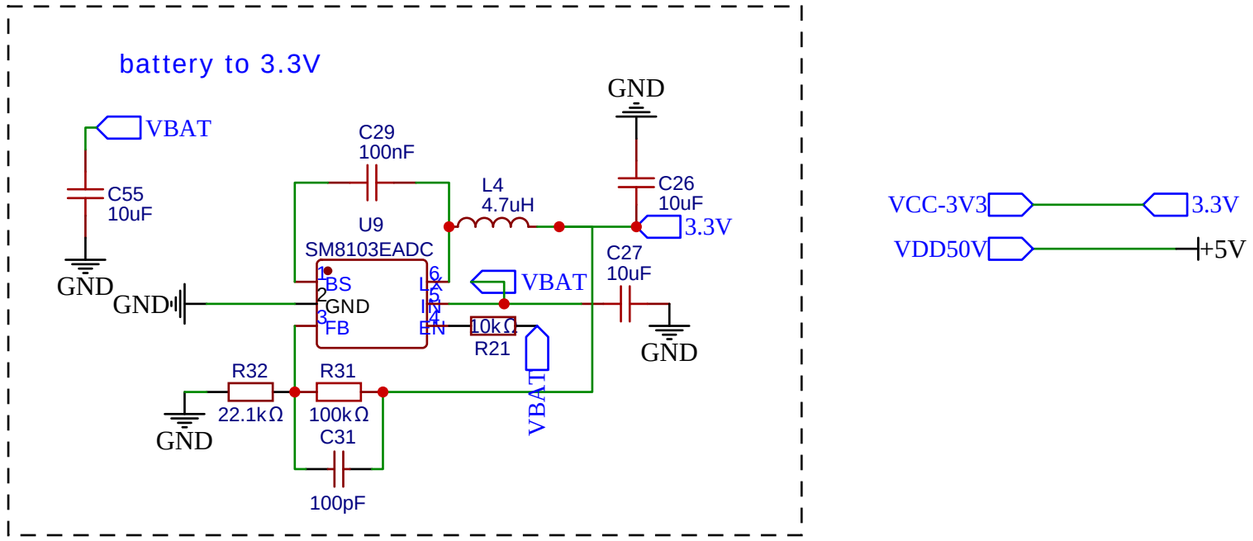

TITLE: Sheet_1		REV: 1.0
EasyEDA	Company: Your Company	Sheet: 1/1
	Date: 2025-04-30 Drawn By: manthank	

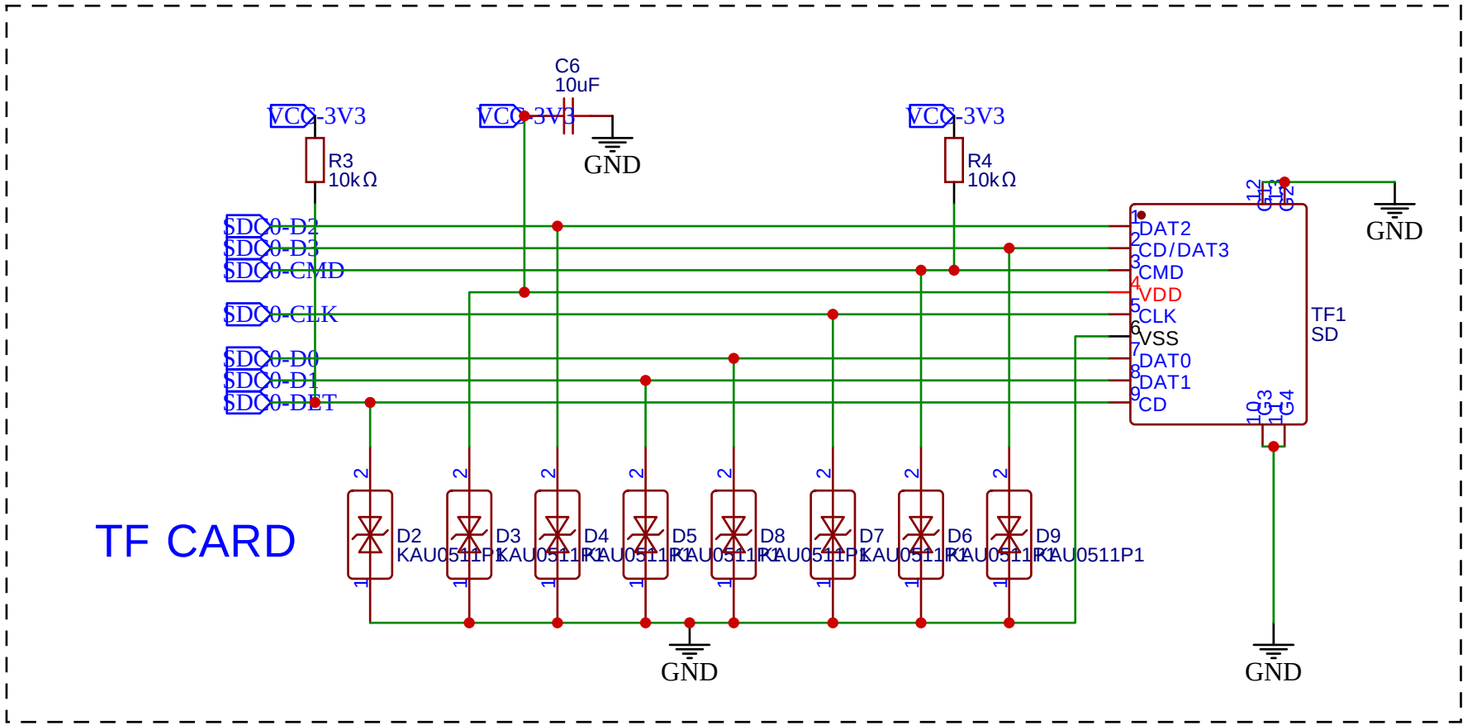

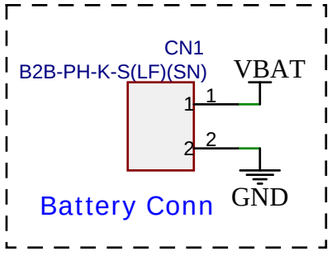

TITLE: Sheet_3	REV: 1.0
Company: Your Company	Sheet: 1/1
Date: 2025-04-30 Drawn By: manthank	

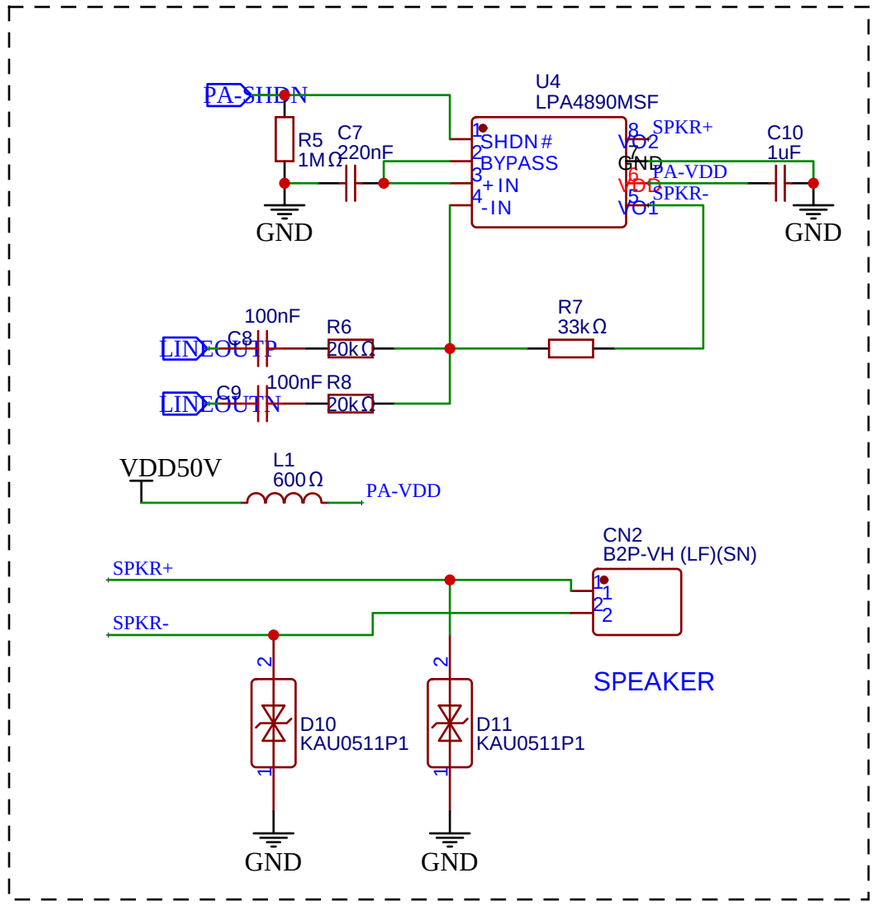

TITLE: Sheet_4		REV: 1.0
EasyEDA	Company: Your Company	Sheet: 1/1
	Date: 2025-04-30 Drawn By: manthank	

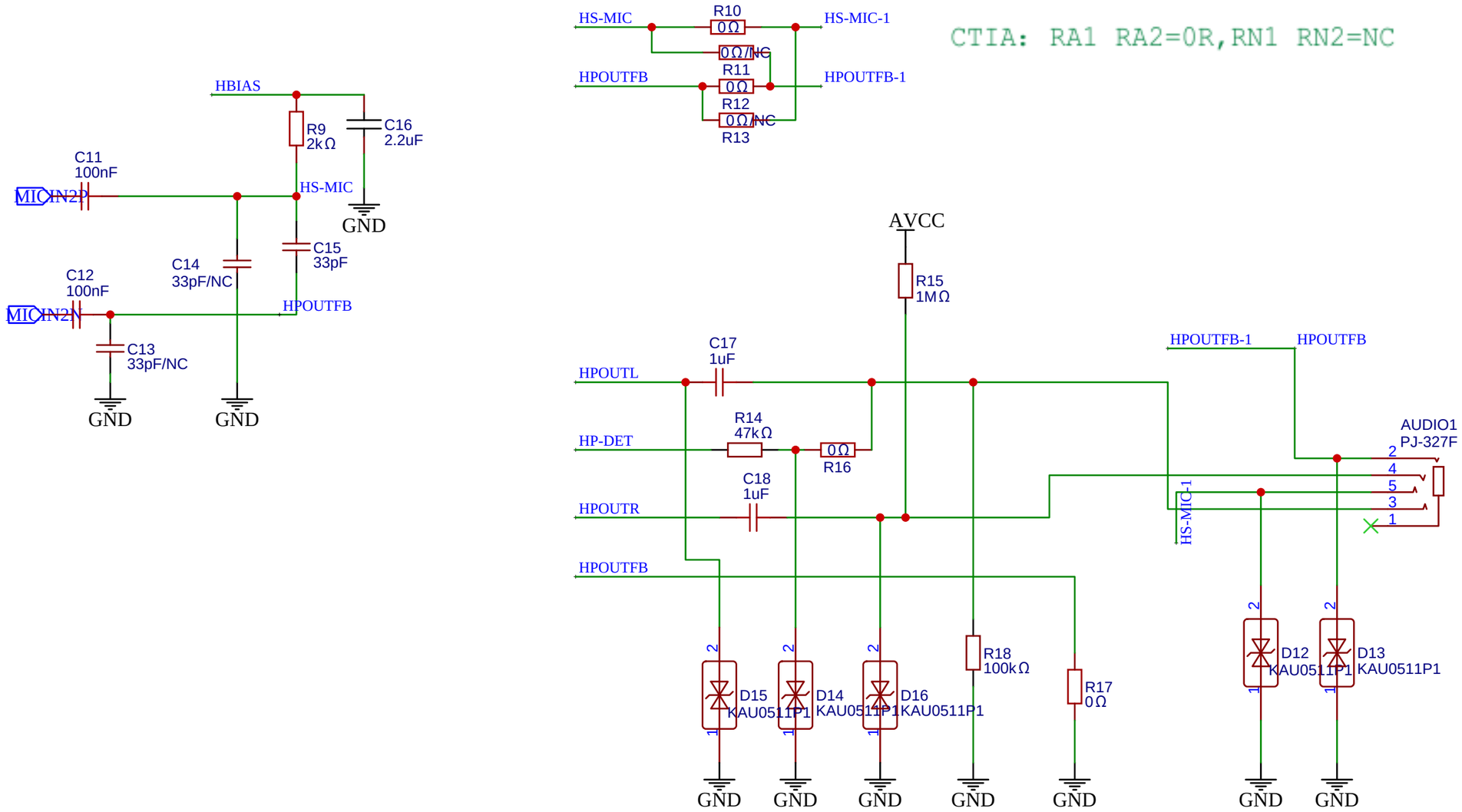

TITLE: Sheet_3	REV: 1.0
EasyEDA — Company: Your Company	Sheet: 1/1
Date: 2025-04-30 Drawn By: manthank	

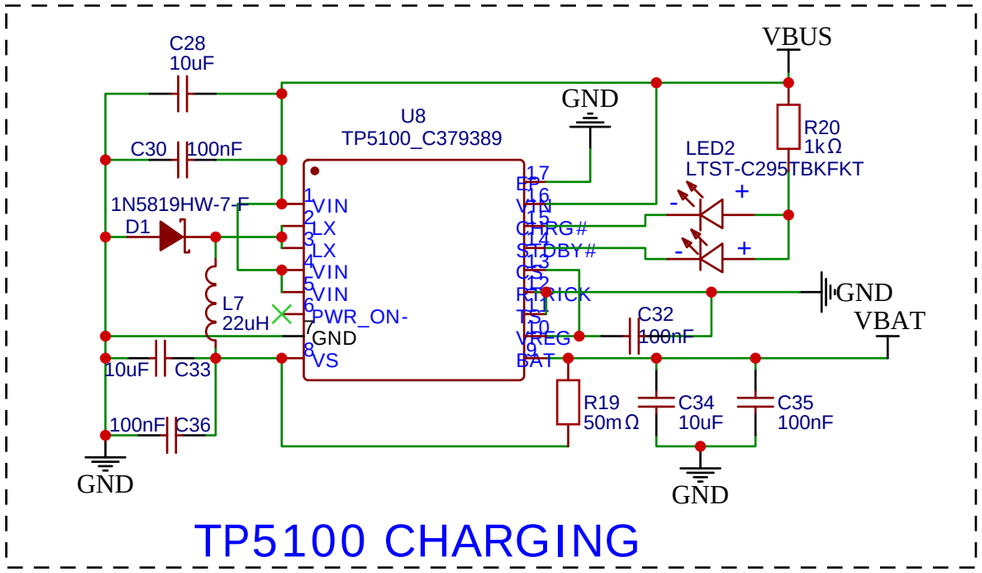

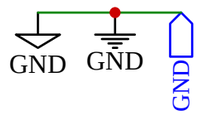

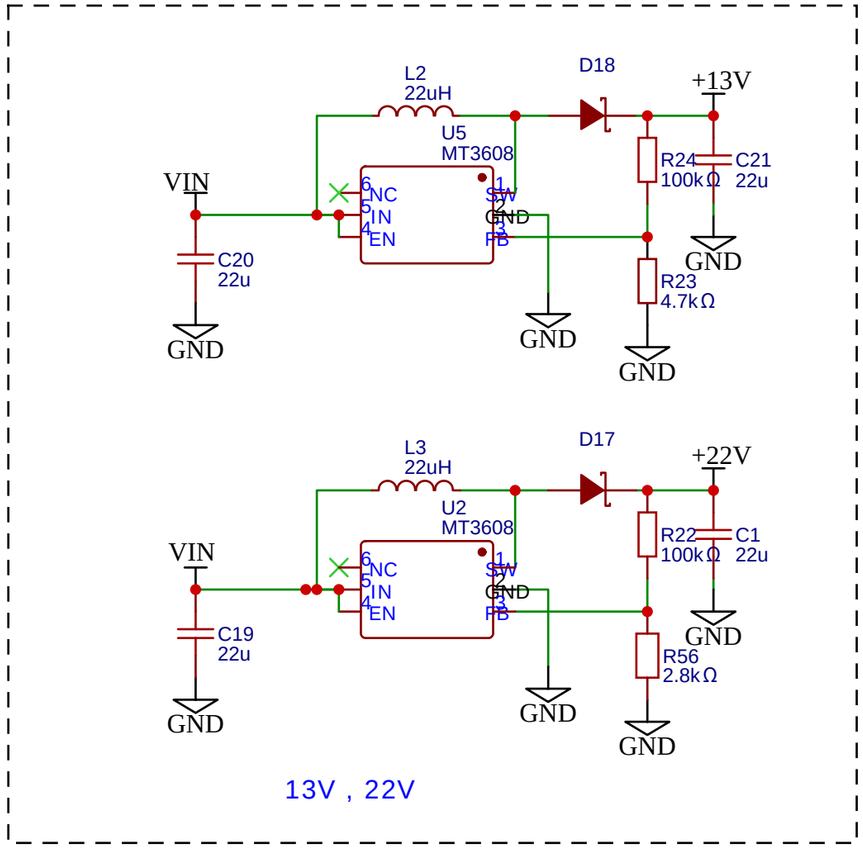

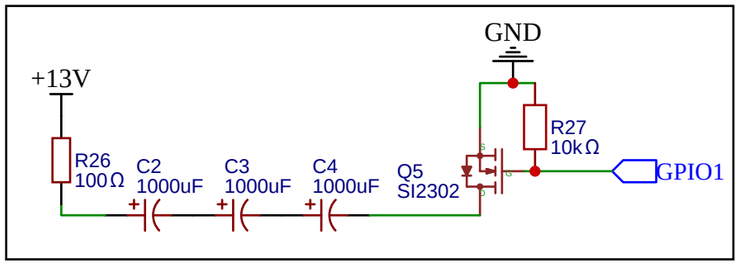

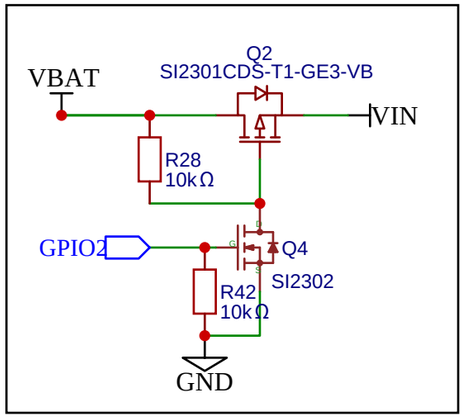

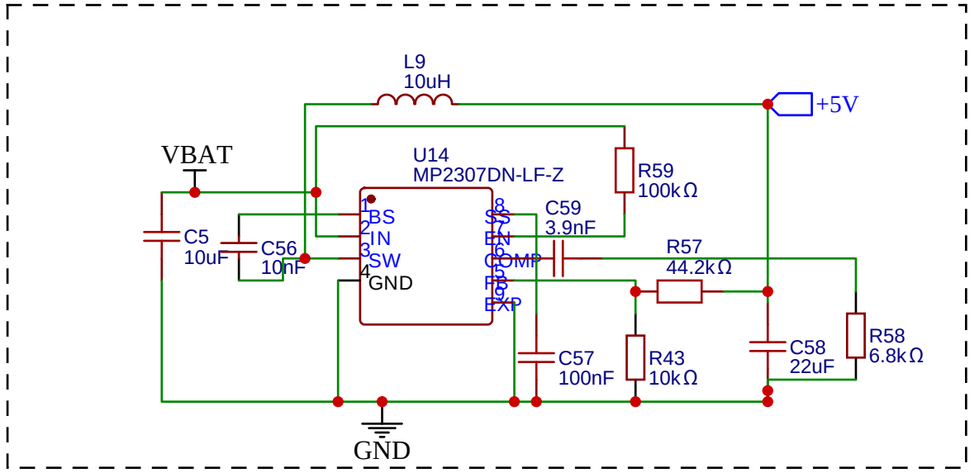

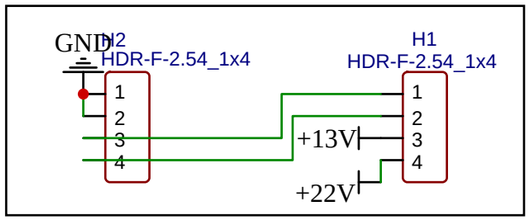

TITLE: Sheet_3	REV: 1.0
EasyEDA Company: Your Company	Sheet: 1/1
Date: 2025-05-05 Drawn By: manthank	

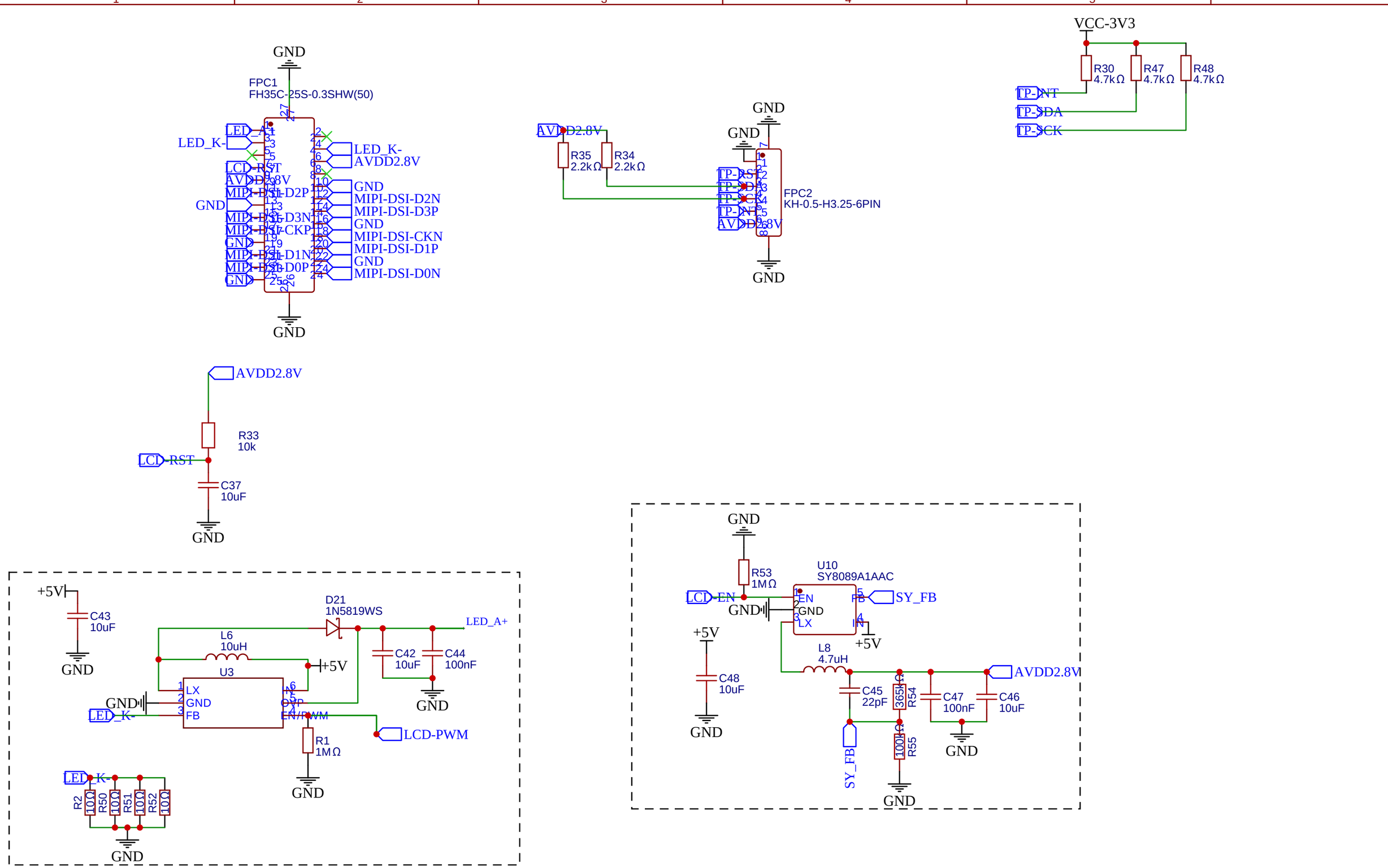

TITLE: Sheet_3	REV: 1.0
Company: Your Company	Sheet: 1/1
Date: 2025-05-06 Drawn By: manthank	

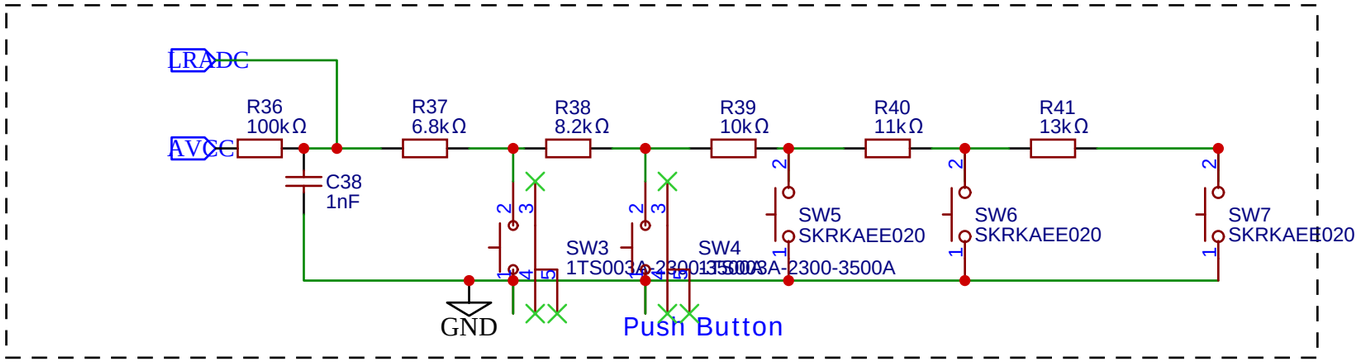

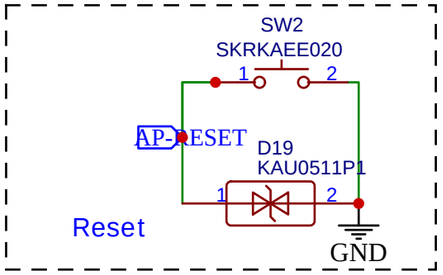

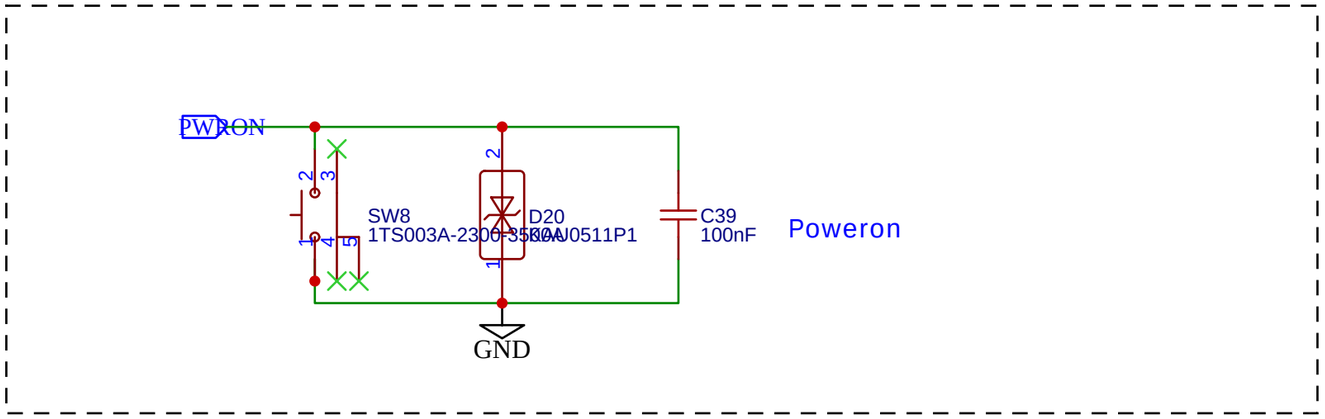

TITLE: Sheet_3		REV: 1.0
EasyEDA	Company: Your Company	Sheet: 1/1
	Date: 2025-05-12 Drawn By: manthank	

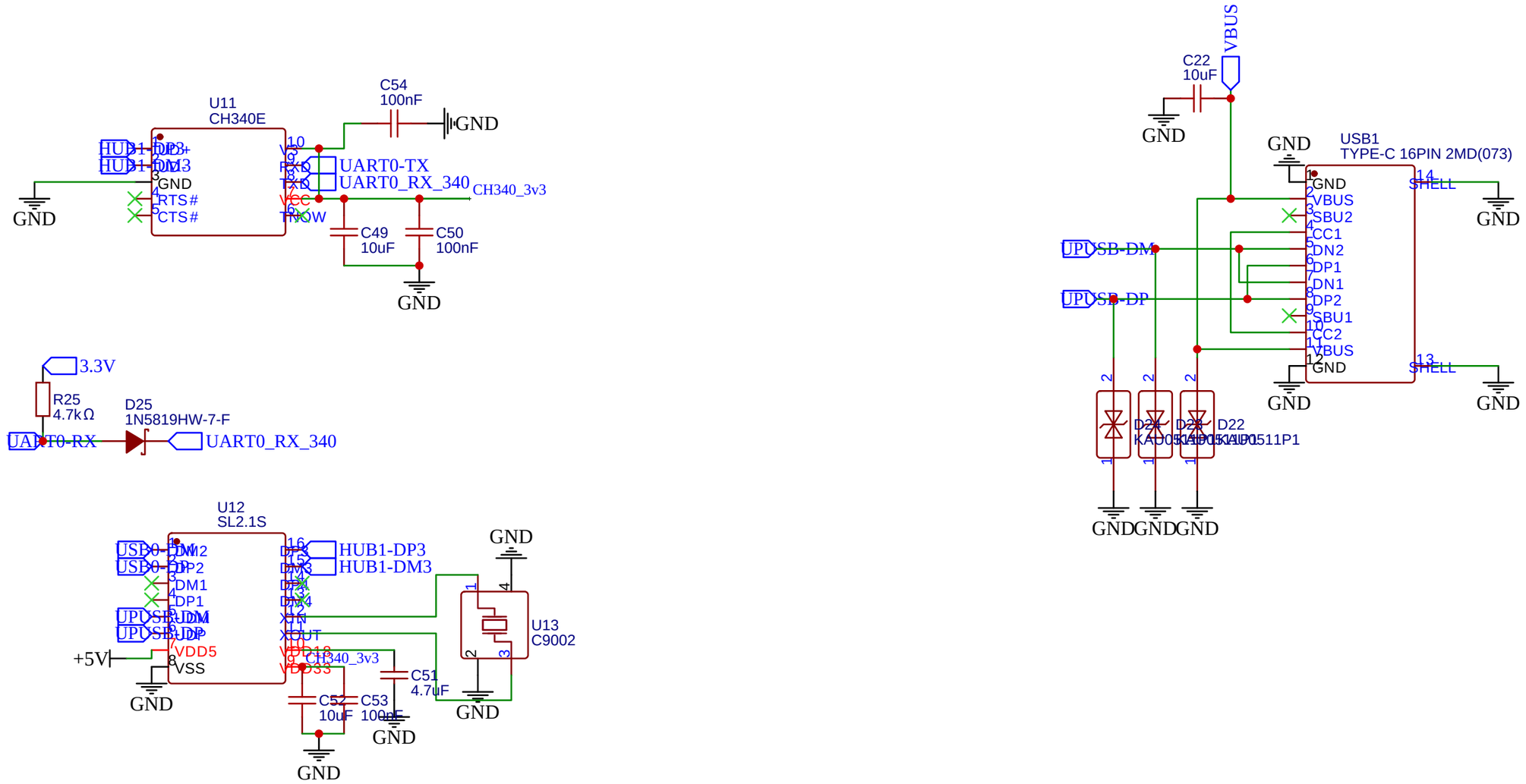

TITLE: Sheet_3		REV: 1.0
EasyEDA	Company: Your Company	Sheet: 1/1
	Date: 2025-05-15 Drawn By: manthank	

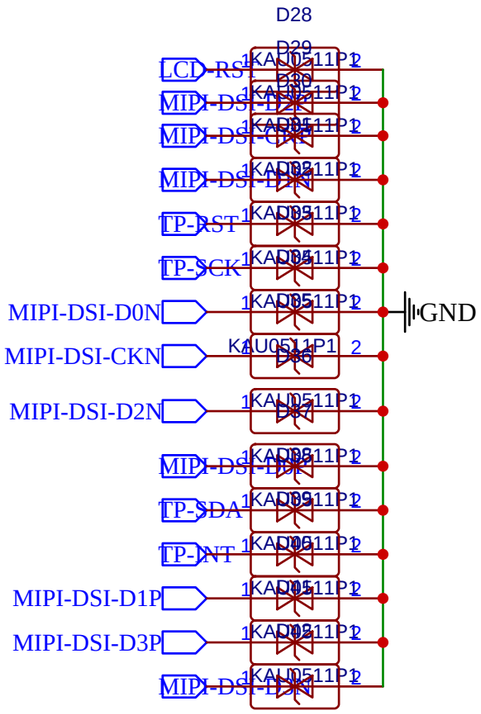

TITLE: Sheet_3		REV: 1.0
EasyEDA	Company: Your Company	Sheet: 1/1
	Date: 2025-05-16 Drawn By: manthank	