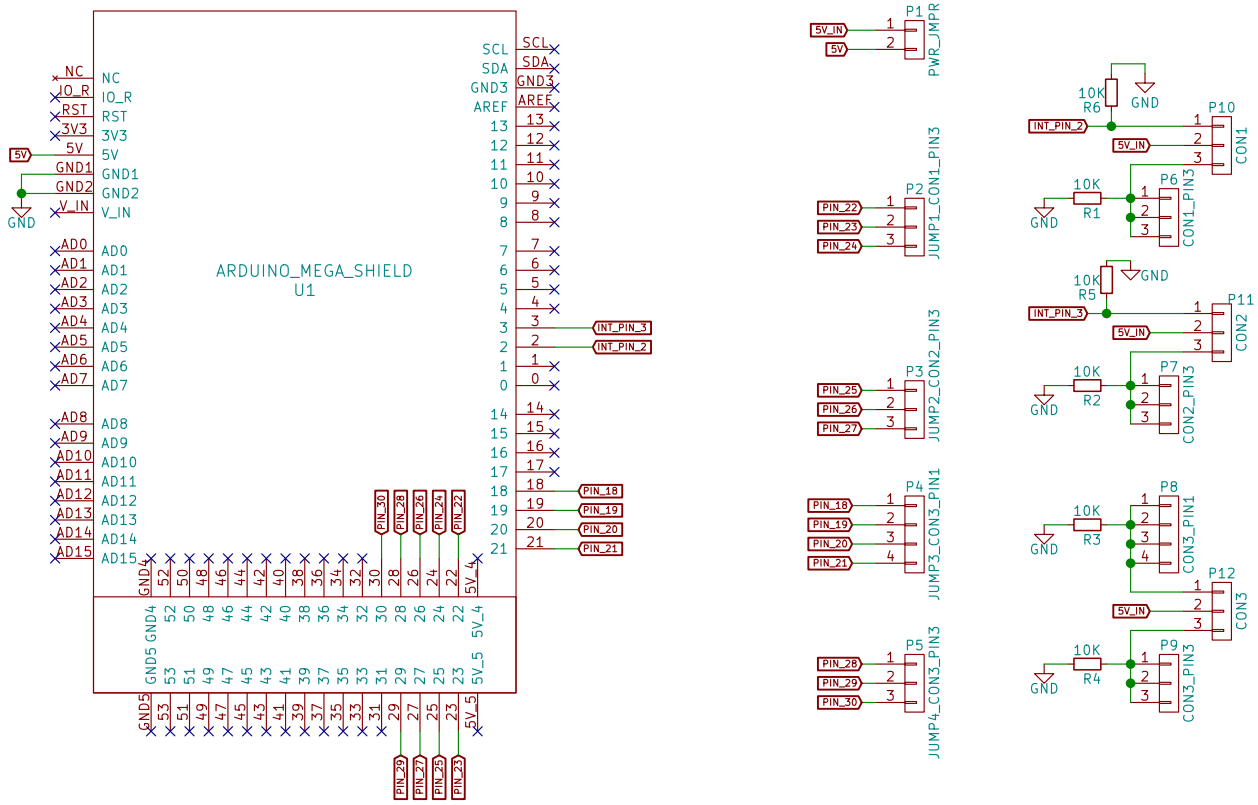

Designed By:Manohar Bompella

Approved By:Lovelesh Patel

thingTronics Innovations Pvt. Ltd.
www.thingtronics.com

Sheet: /
File: Sensor_shield.sch

Title: thingShield-Float

Size: A4	Aproved Date:	**Rev: 1.0**
KiCad E.D.A. kicad 4.0.4-stable		Id: 1/1