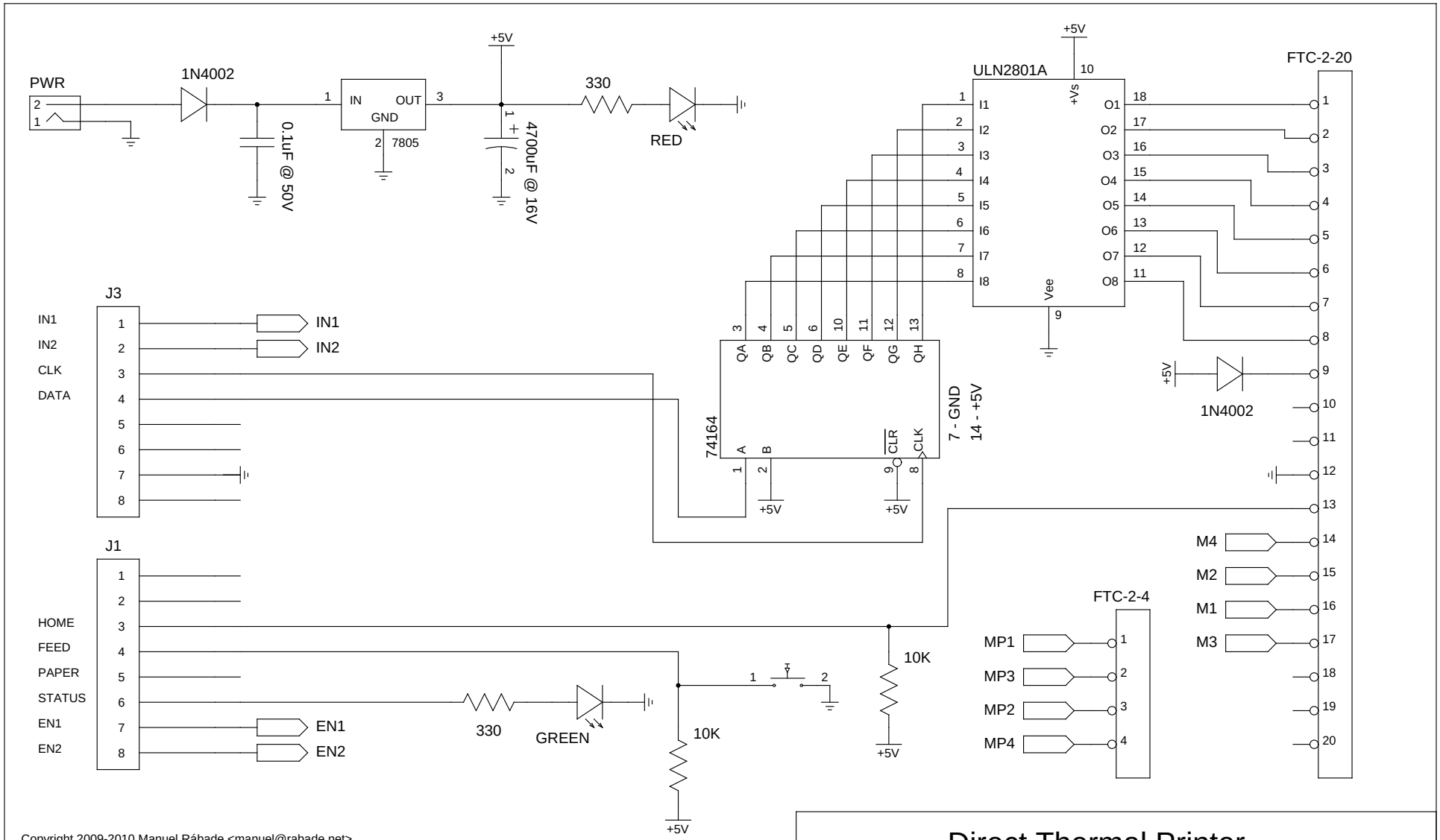

Copyright 2009-2010 Manuel Rábade <manuel@rabade.net>

This work is licensed under the Creative Commons Attribution-ShareAlike 3.0 Unported License.
To view a copy of this license, visit http://creativecommons.org/licenses/by-sa/3.0/ or send a letter
to Creative Commons, 171 Second Street, Suite 300, San Francisco, California, 94105, USA.

Direct Thermal Printer

TITLE

http://rabade.net

FILE: dtp.sch

PAGE 1 OF 2

REVISION: 1

DRAWN BY: Manuel Rábade <manuel@rabade.net>