Distribution Networks Providing Reactive Power as an Ancillary Service: Hierarchical Integration of Online Feedback Optimisation and Fuzzy Control

Manuel Schwenke Jutta Hanson
Department of Electrical Engineering and Information Technology
Institute of Electrical Power Supply with Integration of Renewable Energy
Darmstadt, Germany
{manuel.schwenke, jutta.hanson}@tu-darmstadt.de

***Abstract*—This paper proposes a hierarchical control framework to manage voltage and reactive power by coordinating Distributed Energy Resources (DERs) and On-Load Tap Changers (OLTCs). Conventional monolithic Mixed-Integer Quadratic Programming (MIQP) approaches, while theoretically optimal, often face practical challenges, including high computational load and control instability leading to excessive OLTC switching. The proposed framework overcomes these limitations by decomposing the problem into two layers operating on different timescales: a supervisory fuzzy logic controller manages slow OLTC actuations, while a corrective layer based on Online Feedback Optimisation (OFO) rapidly adjusts DER reactive power. Simulations on a 110-kV test network demonstrate that the hierarchical controller achieves good setpoint tracking and effectively prohibits OLTC chattering compared to a reference MIQP controller, while requiring 75.72 % less computation time, even in a relatively small network. The results highlight the framework's significance as a robust, scalable, and practical solution for ancillary service provision in modern power systems.**

***Index Terms*—Fuzzy Logic Control, Hierarchical Control, On-Load Tap Changer (OLTC), Online Feedback Optimisation (OFO), Reactive Power Control.**

I. Introduction

The efficient management of voltage and reactive power in power systems is a critical challenge, intensified by the declining number of synchronous generators. This trend necessitates the effective control of Distributed Energy Resources (DERs), particularly within distribution networks, to provide ancillary services such as voltage support. Addressing this often involves solving complex Optimal Power Flow (OPF) problems that include both discrete variables, like On-Load Tap Changer (OLTC) positions, and continuous variables, such as DER reactive power output. Whilst Online Feedback Optimisation (OFO) has proven to be a robust method for power system control [1], [2], its application to problems involving OLTCs introduces significant practical hurdles. Integrating discrete OLTC control, as proposed in [3], requires solving a Mixed-Integer Quadratic Program (MIQP) at each iteration. This approach is not only computationally demanding for real-time applications but is also susceptible to excessive OLTC switching, commonly referred to as 'chattering', under volatile grid conditions.

To overcome these limitations, this paper proposes a novel hierarchical control framework. This architecture decomposes the control problem into two distinct layers operating on different timescales: a supervisory layer for slow OLTC actions and a corrective layer for fast DER reactive power adjustments. We demonstrate that the practical advantages of this approach – namely its robustness, reliability, and computational efficiency – significantly outweigh the minor sub-optimality it may introduce compared to a monolithic MIQP OFO formulation. The framework's performance is validated through a comparative analysis against both a monolithic MIQP OFO controller based on [3], [4] and a Quadratic Program (QP) OFO controller. The latter only controls DER reactive power infeed and leaves OLTC control to local AVR controllers. This highlights scenarios where the proposed hierarchical design avoids instabilities inherent in existing methods.

The structure of the paper is as follows: In Section II, the linearised power system model that is utilised in the hierarchical controller is outlined. The architecture of the controller is described in Section III. Section IV presents the investigated study case. Section V presents the study case results, starting with a parameter sweep analysis to tune the controller parameters, and finally evaluating the hierarchical controller performance in a study case. In Section VI, a comprehensive overview of the findings is provided.

II. Linearised Power System Model

The steady-state power flow in electrical power systems can be characterised by a set of non-linear algebraic equations describing the power balance at each bus. The non-linear steady-state power flow equations of a network with n buses can be expressed in compact vector form as:

$$\boldsymbol{g}(\mathbf{x}) = \begin{bmatrix} \boldsymbol{P}(\boldsymbol{\theta}, \boldsymbol{V}) - \boldsymbol{P}_{\mathrm{G}} - \boldsymbol{P}_{\mathrm{D}} \\ \boldsymbol{Q}(\boldsymbol{\theta}, \boldsymbol{V}) - \boldsymbol{Q}_{\mathrm{G}} - \boldsymbol{Q}_{\mathrm{D}} \end{bmatrix} = \mathbf{0}, \tag{1}$$

where $\mathbf{x} = [\boldsymbol{\theta}^T, \boldsymbol{V}^T]^T$ is the state vector containing voltage angles $\boldsymbol{\theta}$ and voltage magnitudes $\boldsymbol{V}$, $\boldsymbol{P}(\boldsymbol{\theta}, \boldsymbol{V})$ and $\boldsymbol{Q}(\boldsymbol{\theta}, \boldsymbol{V})$ are the calculated power injections described by (2) and (3),

$\boldsymbol{P}_{\mathrm{G}}$ and $\boldsymbol{Q}_{\mathrm{G}}$ are the generated active and reactive powers, and $\boldsymbol{P}_{\mathrm{D}}$ and $\boldsymbol{Q}_{\mathrm{D}}$ are the demanded active and reactive powers. [5]

$$P_i = V_i \sum_{j=1}^{n} V_j \left[g_{ij} \cos(\theta_i - \theta_j) + b_{ij} \sin(\theta_i - \theta_j) \right] \tag{2}$$

$$Q_i = V_i \sum_{j=1}^{n} V_j \left[g_{ij} \sin(\theta_i - \theta_j) - b_{ij} \cos(\theta_i - \theta_j) \right] \tag{3}$$

In (2) and (3), g_{ij} and b_{ij} are the conductance and susceptance components of the bus admittance matrix element $\underline{y}_{ij}$. For a transformer branch with an OLTC on the HV-side (terminal i), the admittance is defined by (4). [6]

$$\underline{\mathbf{Y}}_{ij} = \begin{bmatrix} \left(\underline{y}_{\mathrm{s}} + j\frac{b_{\mathrm{c}}}{2} \right) \frac{1}{\tau_i^2} & -\underline{y}_{\mathrm{s}} \frac{1}{\tau_i e^{-j\theta_{\mathrm{shift}}}} \\ -\underline{y}_{\mathrm{s}} \frac{1}{\tau_i e^{j\theta_{\mathrm{shift}}}} & \underline{y}_{s} + j\frac{b_{\mathrm{c}}}{2} \end{bmatrix} \tag{4}$$

Here, $\underline{y}_{\mathrm{s}}$ is the series admittance, b_{c} is the shunt susceptibility, which can be neglected for the following calculations, θ_{shift} is the phase shift of the complex transmission ratio caused by a OLTC step change (assumed to be 0) and τ_i is the effective transmission ratio after neglecting the phase shift.
Using (3) and (4), the transformer reactive power flow from terminal i to j can be derived, obtaining (5). [7]

$$\begin{aligned} Q_{ij} = &- V_i^2 \operatorname{Im}\left(\underline{y}_s\right) \frac{1}{\tau_i^2} - V_i V_j \Big(\cos(\theta_i - \theta_j) \operatorname{Im}\left(\underline{y}_s\right) \frac{1}{\tau_i} \\ &+ \sin(\theta_i - \theta_j) \operatorname{Re}\left(\underline{y}_s\right) \frac{1}{\tau_i} \Big) \end{aligned} \tag{5}$$

Here, τ_i is the effective transformer ratio that depends on the discrete tap position s_i and the tap ratio change per step change $\Delta\tau_i$ (transformer parameter, usually given in % / step).

$$\tau_i = 1 + s_i \Delta\tau_i. \tag{6}$$

In power flow analysis, the non-linear system $\boldsymbol{g}(\mathbf{x}) = \mathbf{0}$ is solved iteratively using the Newton-Raphson method. In each iteration, (7) is used to eventually achieve $\boldsymbol{g}(\mathbf{x}) = 0$,

$$\mathbf{g}(\mathbf{x}^{k+1}) \approx \mathbf{g}(\mathbf{x}^k) + \mathbf{J}\big|_{\boldsymbol{x}^k} \Delta\mathbf{x}^k \tag{7}$$

where $\Delta\mathbf{x}^k = \mathbf{x}^{k+1} - \mathbf{x}^k$ is the correction vector, and $\mathbf{J}\big|_{\boldsymbol{x}^k}$ is the Jacobian matrix described by (8). [5]

$$\mathbf{J} = \begin{bmatrix} \frac{\partial \mathbf{P}}{\partial \boldsymbol{\theta}} & \frac{\partial \mathbf{P}}{\partial \mathbf{V}} \\ \frac{\partial \mathbf{Q}}{\partial \boldsymbol{\theta}} & \frac{\partial \mathbf{Q}}{\partial \mathbf{V}} \end{bmatrix} = \begin{bmatrix} \mathbf{J}_{\mathrm{P}\theta} & \mathbf{J}_{\mathrm{PV}} \\ \mathbf{J}_{\mathrm{Q}\theta} & \mathbf{J}_{\mathrm{QV}} \end{bmatrix} \tag{8}$$

For use in control applications, it may be sufficient to solve the iterative power flow calculation once in an initial operating point where the full network state is available and use the Jacobian $\mathbf{J}\big|_{\boldsymbol{x}^0}$ as a basis to derive control sensitivities. An adjustment of the Jacobian $\mathbf{J}$ and the network state to a new operating point can be made at irregular intervals by a higher-level process in order to improve the convergence of the controller. Assuming a base-case ($\boldsymbol{x}^0$) power flow solution, the sensitivities used for the controller operation are derived in the following.

A. Bus Voltage to DER Reactive Power Infeed Sensitivity

To ensure that the controlled system operates inside the voltage band, the relationship between bus voltage magnitudes and reactive power infeed is formulated. First, neglecting active power changes, the inverse of the reduced Jacobian matrix is:

$$\mathbf{J}_{\mathrm{r}}^{-1}\big|_{x_0} = \left(\mathbf{J}_{\mathrm{QV}} - \mathbf{J}_{\mathrm{Q}\theta} {\mathbf{J}_{\mathrm{P}\theta}}^{-1} \mathbf{J}_{\mathrm{PV}} \right)^{-1}\Big|_{\boldsymbol{x}^0} = \frac{\partial \boldsymbol{V}}{\partial \boldsymbol{Q}}\Big|_{\boldsymbol{x}^0}. \tag{9}$$

The relationship between changes in voltage magnitudes V following small changes in reactive power injections Q can then be established using the reduced jacobian matrix [8]:

$$\boxed{\Delta \boldsymbol{V} = \mathbf{J}_{\mathrm{r}}^{-1}\big|_{x^0} \Delta \boldsymbol{Q}.} \tag{10}$$

B. Bus Voltage to OLTC Position Sensitivity

Another actuator that influences voltage magnitudes directly is the OLTC position of transformers. By deriving (1) with respect to the state vector $\boldsymbol{x}$ and multiplying by the inverse of the Jacobian matrix $\mathbf{D}$, the linearised change in voltage magnitudes following an OLTC change is given by (11), where $\mathbf{D}_{21}$ and $\mathbf{D}_{22}$ are the two lower submatrices of $\mathbf{D}$.

$$\boxed{\Delta \boldsymbol{V} = \Delta\tau_i \begin{bmatrix} \mathbf{D}_{21} & \mathbf{D}_{22} \end{bmatrix} \frac{\partial \boldsymbol{g}}{\partial \tau_i}\Big|_{\boldsymbol{x}^0} \Delta s_i} \tag{11}$$

C. Transformer Reactive Power Flow to DER Reactive Power Infeed Sensitivity

To control the reactive power flow at transformers, the linearised relationship between DER reactive power infeed and reactive power flows at transformers is established. Consider a transformer connected between buses i and j and a DER connected to bus n. The linearised change in a transformer's reactive power flow following small voltage changes can be described by the total derivative in (12).

$$\Delta Q_{ij} = \frac{\partial Q_{ij}}{\partial V_i}\Big|_{\boldsymbol{x}^0} \Delta V_i + \frac{\partial Q_{ij}}{\partial V_j}\Big|_{\boldsymbol{x}^0} \Delta V_j \tag{12}$$

Using the inverse of the reduced Jacobian $\mathbf{J}_{\mathrm{r}}^{-1}$ from (9), small voltage changes ΔV_i and ΔV_j are expressed by (13):

$$\Delta V_m = \frac{\partial V_m}{\partial Q_n}\Big|_{\boldsymbol{x}^0} \Delta Q_n, \quad \text{for } m = i, j. \tag{13}$$

Substituting (13) into (12) yields the linearised relationship between reactive power injections at node n and changes in reactive power flow via the transformer connected to nodes i and j according to (14).

$$\boxed{\Delta Q_{ij} = \left(\frac{\partial Q_{ij}}{\partial V_i} \frac{\partial V_i}{\partial Q_n} + \frac{\partial Q_{ij}}{\partial V_j} \frac{\partial V_j}{\partial Q_n} \right)\Big|_{\boldsymbol{x}^0} \Delta Q_n} \tag{14}$$

D. Transformer Reactive Power to OLTC position Sensitivity

Next, the relationship between a change Δs_i in the OLTC position located at the HV side of a transformer and the reactive power flow at the HV side of a transformer Q_{ij} is derived. Starting from the total derivative using the chain rule, (15) is obtained:

$$\left.\frac{\partial Q_{ij}}{\partial s_i}\right|_{\boldsymbol{x}^0} = \left.\frac{\partial Q_{ij}}{\partial \tau_i}\right|_{\boldsymbol{x}^0} \frac{d\tau_i}{ds_i}, \tag{15}$$

with (16) based on (6).

$$\frac{d\tau_i}{ds_i} = \Delta\tau_i. \tag{16}$$

Substituting and expanding using the implicit function theorem and using discrete differences Δs_i leads to (17).

$$\boxed{\Delta Q_{ij} = \Delta\tau_i \left(\overbrace{\left.\left(\frac{\partial Q_{ij}}{\partial \boldsymbol{x}} \mathbf{J}^{-1} \frac{\partial \boldsymbol{g}}{\partial \tau_i}\right)\right|_{\boldsymbol{x}^0}}^{A} + \overbrace{\left.\frac{\partial Q_{ij}}{\partial \tau_i}\right|_{\boldsymbol{x}^0}}^{B} \right) \Delta s_i} \tag{17}$$

Here,

- $(\partial Q_{ij}/\partial \boldsymbol{x})|_{x^0}$: Sensitivity of transformer reactive power flow Q_{ij} with respect to state vector $\boldsymbol{x}$, evaluated at $\boldsymbol{x}^0$,
- $(\partial \boldsymbol{g}/\partial \tau_i)|_{x^0}$: Sensitivity of (1) with respect to the effective transformer ratio τ_i, evaluated at $\boldsymbol{x}^0$,
- $(\partial Q_{ij}/\partial \tau_i)|_{x^0}$: Direct sensitivity of (5) with respect to the effective transformer ratio τ_i, evaluated at $\boldsymbol{x}^0$.

Expression (17) consists of two components:

1) Indirect effect: A accounts for system-wide voltage and angle changes caused by the OLTC change.
2) Direct effect: B accounts for the immediate change in reactive power flow due to OLTC change.

E. Branch Current to DER Reactive Power Infeed Sensitivity

For thermal constraint monitoring, the branch current magnitude sensitivity to DER reactive power infeed is computed using the derivative of (18), as derived in [9]:

$$\underline{I}_{ij} = \underline{Y}_{ij}(\underline{V}_i - \underline{V}_j), \tag{18}$$

$$\frac{\partial \underline{I}_{ij}}{\partial Q_n} = \underline{Y}_{ij}\left(\frac{\partial \underline{V}_i}{\partial Q_n} - \frac{\partial \underline{V}_j}{\partial Q_n}\right), \tag{19}$$

where $\underline{Y}_{ij}$ is the corresponding element of the network admittance matrix and $\partial V_i/\partial Q_n$ and $\partial V_j/\partial Q_n$ are computed using the inverse of the Jacobian. With (18) and (19), the branch current magnitude sensitivity is then defined by (20).

$$\boxed{\frac{\partial I_{ij}}{\partial Q_n} = \frac{1}{I_{ij}} \operatorname{Re}\left(\underline{I}_{ij} \frac{\partial \underline{I}_{ij}}{\partial Q_n}\right)} \tag{20}$$

F. Note on Linearisation Errors

The iterative controller design presented in Section III continuously compensates for model simplifications by measuring actual system response and correcting deviations in each control cycle. This closed-loop approach ensures reliable control performance, making continuous sensitivity updates or a nonlinear model unnecessary for achieving control objectives.

III. Hierarchical Controller Architecture

This section details the proposed hierarchical controller that coordinates slow OLTC actions with fast DER reactive-power adjustments. The hierarchical control system consists of two distinct layers operating at different time scales:

1) **Supervisory Layer:** Fuzzy logic-based transformer tap control (sampling period $T_{\text{fuz}} > T_{\text{ofo}}$)
2) **Corrective Layer:** Online Feedback Optimisation for DER reactive power control (sampling period T_{ofo})

In addition, the controller is supplemented by a threshold-based control of shunt compensators located at substations, see Section III-D. The two layers operate on different time-scales. The corrective layer is executed for all $t \in \{kT_{\text{ofo}} : k \in \mathbb{Z}\}$, the supervisory layer for all $t \in \{kT_{\text{ofo}} : k \in \mathbb{Z}, T_{\text{fuz}} \mid kT_{\text{ofo}}\}$. The flow chart of one iteration k is presented in Fig. 1. Here, $\boldsymbol{m}^k$ is the vector of all system measurements at instant k:

$$\boldsymbol{m}^k = \left[\left(\boldsymbol{Q}^k_{\text{DER}}\right)^T, \left(\boldsymbol{Q}^k_{\text{meas,tr}}\right)^T, \left(\boldsymbol{I}^k_{\text{meas,br}}\right)^T\right]^T, \tag{21}$$

where $\boldsymbol{Q}^k_{\text{DER}}$ is the vector of reactive power infeed of DER, $\boldsymbol{Q}^k_{\text{meas,tr}}$ is the vector of measured reactive power flow at the HV sides of transformers, $\boldsymbol{I}^k_{\text{meas,tr}}$ is the vector of measured currents of monitored lines.

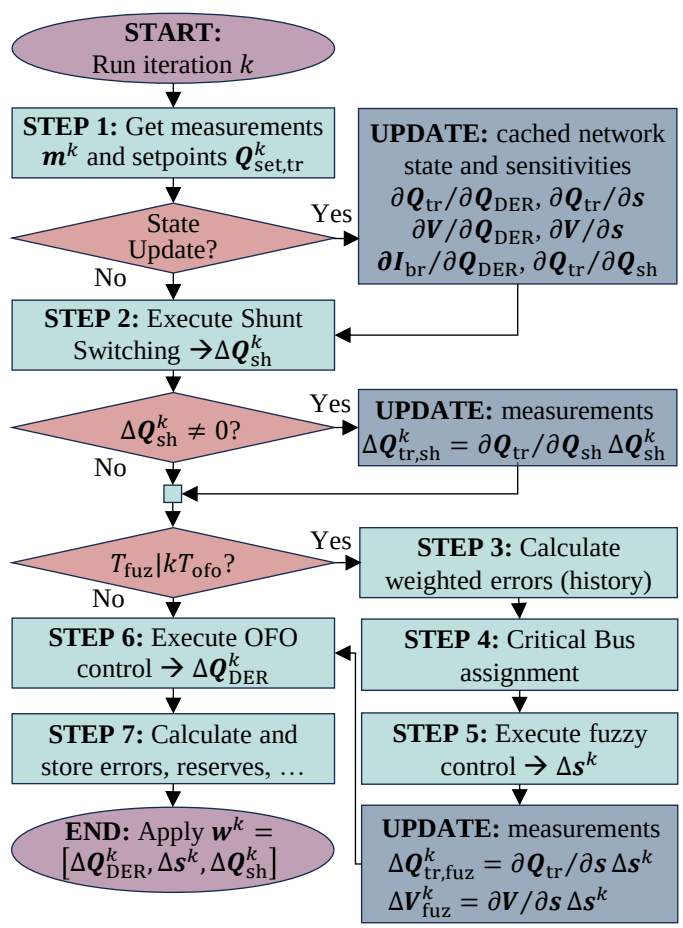

Fig. 1. Flow chart showing a hierarchical controller iteration k.

A. Corrective Layer: Online Feedback Optimisation (OFO)

The OFO layer solves the Quadratic Program (QP) (23) to iteratively adjust DER reactive power as defined by (22) [4].

$$\boldsymbol{u}^{k+1} = \boldsymbol{u}^k + \alpha \boldsymbol{\sigma}(\boldsymbol{u}^k, \boldsymbol{d}^k, \boldsymbol{y}^k), \tag{22}$$

where α is the control gain and $\boldsymbol{\sigma}^k$ is the solution to the QP.

$$\boldsymbol{\sigma}^k = \min_{\boldsymbol{w}^k, \boldsymbol{z}^k} \; \boldsymbol{g}(\boldsymbol{w}^k, \boldsymbol{z}^k) \tag{23}$$

$$\text{s.t. } \alpha \boldsymbol{w} \in [\boldsymbol{u}^k_{\text{LL}} - \boldsymbol{u}^k, \boldsymbol{u}^k_{\text{UL}} - \boldsymbol{u}^k] \tag{24}$$

$$\alpha \nabla \mathbf{H} \boldsymbol{w} \in [\boldsymbol{y}_{\text{LL}} - \boldsymbol{y}^k - z, \boldsymbol{y}_{\text{UL}} - \boldsymbol{y}^k + \boldsymbol{z}] \tag{25}$$

$$\boldsymbol{z} \geq 0 \tag{26}$$

The quadratic objective in (23) is:

$$\boldsymbol{g}(\boldsymbol{w}^k, \boldsymbol{z}^k) = \underbrace{\left(\boldsymbol{w}^k\right)^T \mathbf{G}_{\text{w}} \boldsymbol{w}^k}_{\text{cost of changes}} + \underbrace{\nabla \boldsymbol{f}^T \tilde{\mathbf{H}} \boldsymbol{w}^k}_{\text{objective tracking}} + \underbrace{\left(\boldsymbol{z}^k\right)^T \mathbf{G}_{\text{z}} \boldsymbol{z}^k}_{\text{slack costs}} + \underbrace{(\boldsymbol{u}^k + \alpha \boldsymbol{w}^k)^T \mathbf{G}_{\text{u}} (\boldsymbol{u}^k + \alpha \boldsymbol{w}^k)}_{\text{DER usage}}, \tag{27}$$

where $\boldsymbol{u}^k = \boldsymbol{Q}^k_{\text{DER}}$ is the vector of system inputs, i.e., DER reactive power infeed, $\boldsymbol{w}^k = \Delta \boldsymbol{Q}^k_{\text{DER}}$ is the vector of iterative adaptations of $\boldsymbol{u}^k$, $\boldsymbol{z}^k$ is the vector of slack variables for the output variables for a soft constraint implementation, and $\mathbf{G}_{\text{w}}$, $\mathbf{G}_{\text{u}}$ and $\mathbf{G}_{\text{z}}$ are diagonal weighting matrices. The input constraints are defined by (24) and take into account the active power-dependent reactive power capabilities of DER that are usually defined by the grid code. Moreover, (25) defines the output constraints that ensure the monitored quantities are in safe operating ranges, where LL and UL indicate lower and upper limits. The output vector of monitored quantities is:

$$\boldsymbol{y} = [\boldsymbol{Q}_{\text{tr}}, \boldsymbol{V}, \boldsymbol{I}_{\text{br}}]^T \tag{28}$$

The linearised input-output relationship is represented by $\nabla \mathbf{H}$ that is defined in (29).

$$\nabla \mathbf{H} = \left[\frac{\partial \boldsymbol{Q}_{\text{tr}}}{\partial \boldsymbol{Q}_{\text{DER}}}, \; \frac{\partial \boldsymbol{V}}{\partial \boldsymbol{Q}_{\text{DER}}}, \; \frac{\partial \boldsymbol{I}_{\text{br}}}{\partial \boldsymbol{Q}_{\text{DER}}} \right]^T \tag{29}$$

The submatrices in $\nabla \mathbf{H}$ can be constructed using the derived sensitivities in (10), (14) and (19). The augmented gradient $\tilde{\mathbf{H}}$ that appears in the quadratic objective (27) is constructed using the chain rule [1]:

$$\tilde{\mathbf{H}} = \left[\mathbf{I}_{\text{u}}^T, \quad \nabla \mathbf{H}^T \right]^T \tag{30}$$

where $\mathbf{I}_{\text{u}}$ is the identity matrix for the input variables. The gradient of the objective $\nabla \boldsymbol{f}$ of the projected gradient descent of the OFO is defined by (31).

$$\nabla \boldsymbol{f} = \begin{bmatrix} 2 g_{\text{u}} \boldsymbol{u}^k \\ 2(\boldsymbol{Q}^k_{\text{trafo}} - \boldsymbol{Q}^k_{\text{trafo,set}}) \\ \mathbf{0}_{\text{V}} \\ \mathbf{0}_{\text{I}} \end{bmatrix} \tag{31}$$

B. Inter-Layer Communication

As the OFO layer controls only DER reactive power without authority over OLTC positions, it may encounter persistent constraint violations that require tap changes for resolution. The OFO layer therefore provides exponentially weighted time-averaged error signals to the fuzzy controller. The idea behind this is to communicate information about all iterations of the corrective layer since the last execution of the supervisory layer, whilst weighting recent errors the most.

The transformer reactive power error at instant k is defined as the deviation from a time-dependent setpoint:

$$e^k_{\text{Q},ij} = Q^k_{\text{set},ij} - Q^k_{\text{meas},ij} \quad \forall (i,j) \in \mathcal{S}_{\text{tr,terminals}}. \tag{32}$$

The transformer reactive power deviations from setpoints are weighted over a window with history length T_{fuz}:

$$\bar{e}^k_{\text{Q},ij} = \sum_{l=0}^{T_{\text{fuz}}-1} \bar{w}_l \cdot e^l_{Q,ij}, \tag{33}$$

with the exponentially decaying weights defined in (34).

$$\bar{w}_l = \frac{\gamma^{T_{\text{fuz}}-1-l}}{\sum_{i=0}^{T_{\text{fuz}}-1} w_i} \quad \text{for } l = 0, 1, \ldots, T_{\text{fuz}} - 1 \tag{34}$$

The definition of the bus voltage magnitude error follows this assignment logic:

Critical Bus Assignment:

1) Compute weighted averages of bus voltages: $\bar{V}_n = \sum_l w_l V^l_n$, with $w_l \propto \gamma^{L-1-l}$, $\forall n \in \mathcal{S}_{\text{bus,110kV}}$
2) Score buses: $score_n = \max(0, \bar{V}_n - V_{\text{P}}, V_{\text{N}} - \bar{V}_n)$
3) Greedily assign buses to transformers by $score_n \downarrow$:
   - Skip bus n if $\arg\max_{(ij)} |\partial \boldsymbol{Q}_{\text{tr}} / \partial Q_n| \in \mathcal{S}_{\text{assigned}}$
   - Assign n to $(ij)^* = \arg\max_{(ij) \in \mathcal{S}_{\text{free}}} |\partial \boldsymbol{Q}_{\text{tr}} / \partial Q_n|$
4) For transformer (ij) with assigned voltage $\bar{V}_{ij}$, set:

$$\bar{e}_{\text{V},ij} = \begin{cases} V_{\text{UL,soft}} - \bar{V}_{ij} & \text{if over-voltage} \\ V_{\text{LL,soft}} - \bar{V}_{ij} & \text{if under-voltage} \\ 0 & \text{if unassigned / within limit} \end{cases}$$

Where: $V_{\text{UL,soft}} = 1.08$, $V_{\text{LL,soft}} = 0.96$ p.u.

The history of weighted errors is reset after the execution of the supervisory layer. In addition to reactive power and voltage errors, the OFO layer continuously assesses DER reactive power reserves from active power measurements and operational diagrams, communicating this information to the supervisory layer for control mode selection. Under normal conditions with sufficient DER reserves, the supervisory controller operates in 'Reactive Power Mode' to actively track setpoints. When DER reserves are insufficient, it transitions to 'Voltage Mode', de-prioritising reactive power tracking to prevent unstable OLTC actions and focusing on bus voltage maintenance until reserves recover.

C. Supervisory Layer: Fuzzy OLTC controller (FUZ)

The supervisory layer uses fuzzy decision logic to determine a tap-change command Δs_i for each OLTC based on

information about $\bar{e}_{\mathrm{Q},ij}$ and $\bar{e}_{\mathrm{V},ij}$ and current DER reserves. First, the inputs and outputs are defined. Second, the rule base of the fuzzy controller is presented. The fuzzy controller uses the centre of gravity as defuzzification method.

1) Fuzzification: The reactive power and voltage error (input), as well as the OLTC (output) membership functions are defined using triangular or trapezoidal functions in Fig. 2 a)-c). Here, $c_{\mathrm{Q},ij} = f_{\mathrm{Q}} \cdot \partial Q_{ij}/\partial s_i$ in Fig. 2 corresponds to the sensitivity from (17) or multiples of it. The scaling factor should satisfy $1 \leq f_{\mathrm{Q}} < 3$, such that tap changes reduce $e^k_{\mathrm{Q},ij}$.

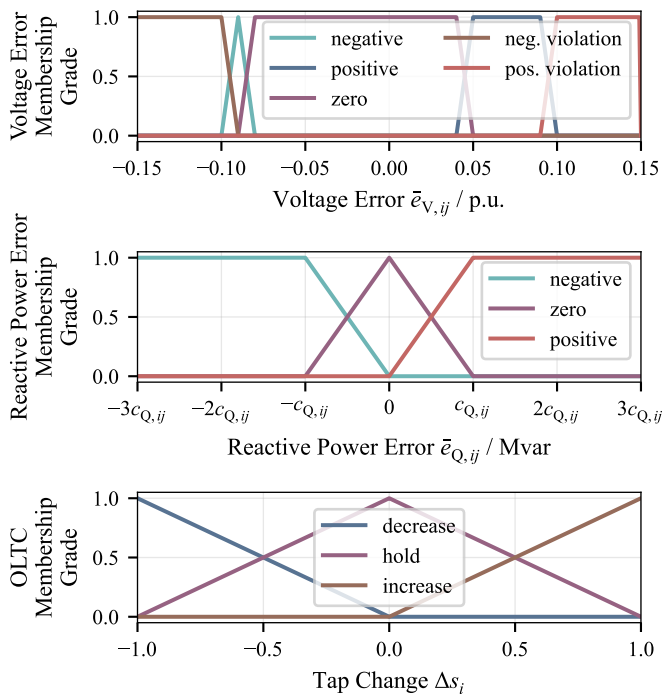

Fig. 2. Membership functions of fuzzy inputs (voltage and reactive power error) and outputs (tap changes).

2) Rule Base: The fuzzy rule base (see Table I) prioritises voltage violations over reactive power tracking. Rules adjusting OLTC positions based on reactive power errors when the voltage error is zero or when both error types require the same direction of tap change are labelled as standard priority (S). High priority rules (H) enforce voltage compliance ($0.9 \leq V \leq 1.1$); medium priority rules (M) optimise voltages if soft limits $V_{\mathrm{LL,soft}}$ or $V_{\mathrm{UL,soft}}$ are surpassed, under the condition that reactive power errors are zero.

TABLE I
FUZZY RULE BASE FOR TAP CONTROL.

e_V \ e_Q	**Negative**	**Zero**	**Positive**
Pos. Violation	Decrease (H)	Decrease (H)	Decrease (H)
Positive	Decrease (S)	Decrease (M)	Decrease (S)
Zero	Increase (S)	Hold (S)	Decrease (S)
Negative	Increase (S)	Increase (M)	Increase (S)
Neg. Violation	Increase (H)	Increase (H)	Increase (H)

D. Hysteresis-Based Switching Logic

To manage shunt compensation equipment at the 380-kV/110-kV substations, the hierarchical framework is supported by a simple hysteresis-based logic. This enables the shunt compensation equipment to be switched at large reactive power setpoint values $Q_{\mathrm{set},ij}$ to support the controller.

$$r_{ij} = \begin{cases} 1 \text{ (Reac.)} & \text{if } Q_{\mathrm{set},ij} > 0.6 \cdot Q_{\mathrm{sh}} \text{ AND } r_{\mathrm{prev},ij} = 0 \\ -1 \text{ (Cap.)} & \text{if } Q_{\mathrm{set},ij} < -0.6 \cdot Q_{\mathrm{sh}} \text{ AND } r_{\mathrm{prev},ij} = 0 \\ 0 \text{ (Off)} & \text{if } |Q_{\mathrm{set},ij}| < 0.4 \cdot Q_{\mathrm{sh}} \text{ AND } r_{\mathrm{prev},ij} \neq 0 \\ r_{\mathrm{prev},ij} & \text{otherwise,} \end{cases} \tag{35}$$

where Q_{sh} is the shunt rating.

IV. Simulation Setup and Study Case Description

The investigated network is a generic 110-kV system with three coupling transformers to the 380-kV network, explicitly created by the authors with typical meshed topology and distributed generation. Loads represent medium-voltage substations, with both loads and generation modelled as PQ-nodes using SimBench dataset time-series interpolated to 1-minute values [10]. The single-line representation is shown in Fig. 3. The study case in Section V covers 05.01.2016 to 07.01.2016 (or sub-periods), which is characterised by high wind infeed and varying PV infeed and load. The setpoints of transformers' reactive power flow are set arbitrarily, encouraging diverse power flows to show the versatility of the controller. The parameters of the controller follow Section V-A with decay factor $\gamma = 0.7$ for both $\bar{e}_{\mathrm{Q},ij}$ and $\bar{e}_{\mathrm{V},ij}$. Voltage mode switching occurs when DER capacities fall below 20 % of maximum capacities and available reserves are smaller than required setpoint correction. Each substation includes a 50 Mvar reactor and a 50 Mvar capacitor controlled by hysteresis switching.

A. Reference Cases

The proposed controller architecture is benchmarked against two references: 1) Mixed-Integer Quadratic Program (MIQP) controller according to [3], [4], where (27) is augmented by a term $\left(\boldsymbol{s}^k\right)^T \mathbf{G}_{\mathrm{s}} \boldsymbol{s}^k$, where $\mathbf{G}_{\mathrm{s}}$ is a diagonal matrix with g_{s} on the diagonal, determining OLTC switching in a unified MIQP OFO formulation without fuzzy layer, 2) a QP OFO formulation as in Section III-A, with local AVR control of OLTC positions, thus also without fuzzy layer.

V. Study Case Results

A. Parameter Sweep Analysis

Before evaluating the controller performance, the control parameters are tuned for the investigated study case. There are multiple publications about determining OFO parameters to enable stable controller operation [1], [11]. In this publication, a parameter sweep analysis is performed to evaluate stability and define optimal parameters. The term optimal hereby refers to a minimisation of the composite score described in (36):

$$S_c = 0.5 \cdot \hat{f}_{\mathrm{Q}} + 0.3 \cdot \hat{f}_{\mathrm{s}} + 0.2 \cdot \hat{f}_{\mathrm{DER}} \tag{36}$$

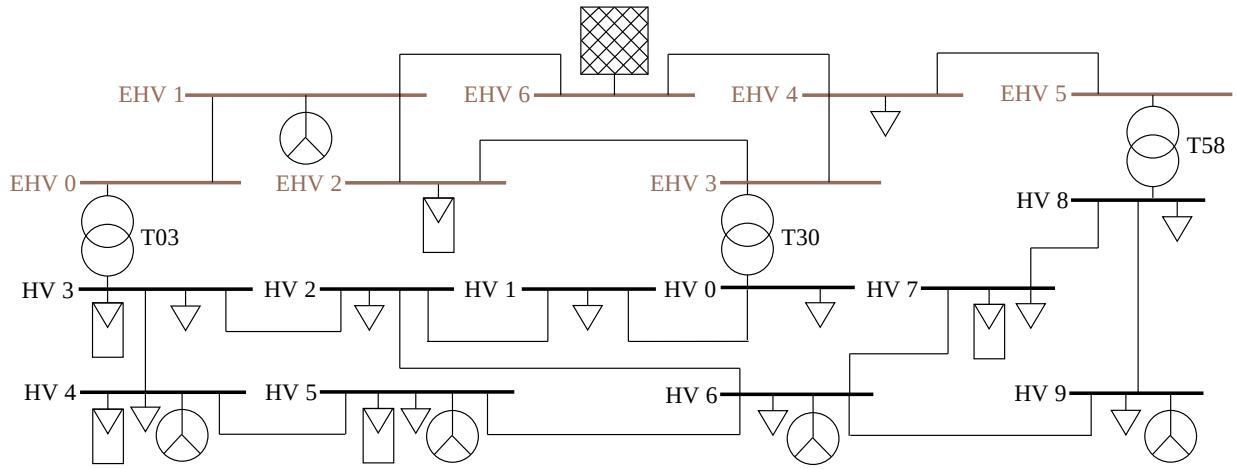

Fig. 3. Single line diagram of investigated network. The 380-kV line lengths vary between 50-100 km, the 110-kV line lengths between 15-40 km, the installed wind power between 60-110 MVA and the installed PV power between 30-100 MVA. Detailed information can be requested from the authors.

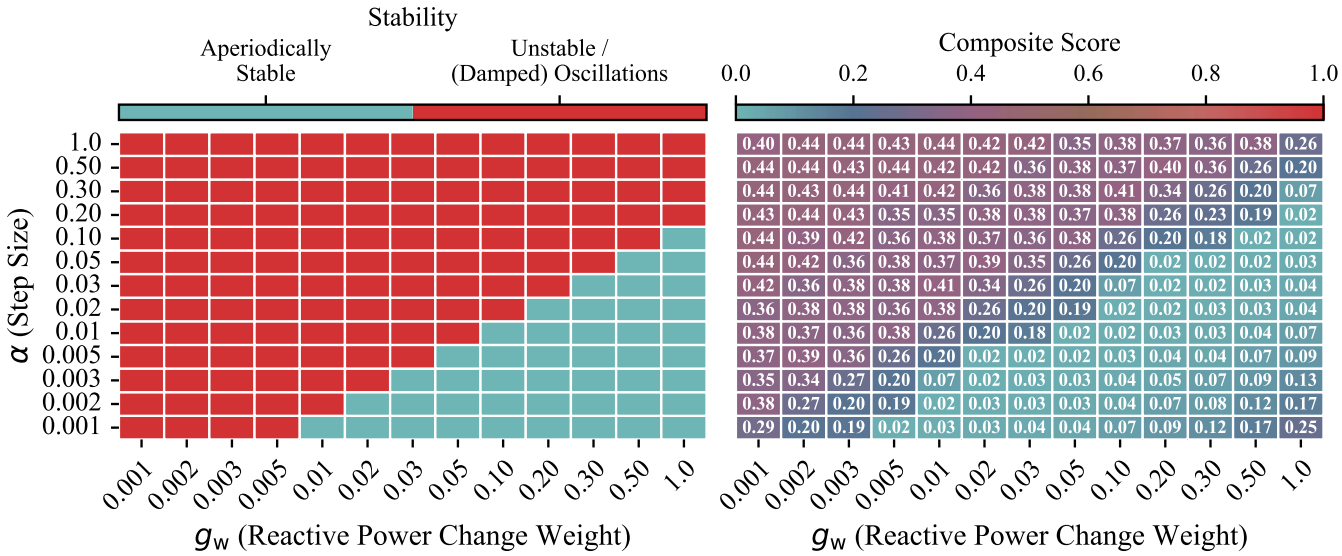

Fig. 4. Results of parameter sweep. On the left, the controller's stability, on the right the composite score in dependence of parameter combinations is plotted. These are the heatmaps for $f_Q = 1.5$ and $g_u = 0.01$, as with these parameters the best scores are achieved.

where the objectives are the normalised deviations of transformer reactive power flows from setpoints $\hat{f}_Q$, the normalised number of tap changes $\hat{f}_s$ and the normalised DER reactive power usage $\hat{f}_{DER}$, where usage is defined as the sum of absolute infeed. The control parameters are swept in the following ranges: $\Omega_{\alpha,g_w} = \{1,2,3,5\} \times \{10^k : k \in \{-3,-2,-1,0\}\}$, $\Omega_{f_Q} = \{1,1.5,2\}$, $\Omega_{g_u} = \{10^k : k \in \{-3,-2,-1,0\}\}$.

The results of the parameter sweep analysis are presented in Fig. 4. The parameter optimisation seeks to minimise the composite score defined in (36) whilst ensuring controller stability. Here, stability refers to the absence of substantial overshoot, undamped oscillations around setpoints, and other undesirable transient behaviours that would compromise control performance. The optimal parameter combination, which achieves both the lowest composite score and stable operation, is identified as $\alpha = 0.03$, $g_w = 0.2$, $f_Q = 1.5$, and $g_u = 0.01$.

B. Detailed Analysis of Hierarchical Controller Performance

To investigate the hierarchical controller behaviour under varying system conditions, including low DER control resources and high voltages, the hierarchical controller is evaluated over a two-day period. The results, presented in Fig. 5 and Table II, demonstrate effective transformer reactive power setpoint tracking whilst maintaining reasonable OLTC operation frequency.

Fig. 5 a) shows the transformers' reactive power flows and setpoints. The setpoints can be well tracked, with an average deviation of 1.69 Mvar on the first day investigated. Fig. 5 b) visualises the OLTC operations, demonstrating that no tap chattering occurs. Fig. 5 c) shows the shunt states, following sudden changes in reactive power setpoints. Fig. 5 d) and e) demonstrate the controller's ability to maintain network constraint compliance, highlighting the effectiveness of the

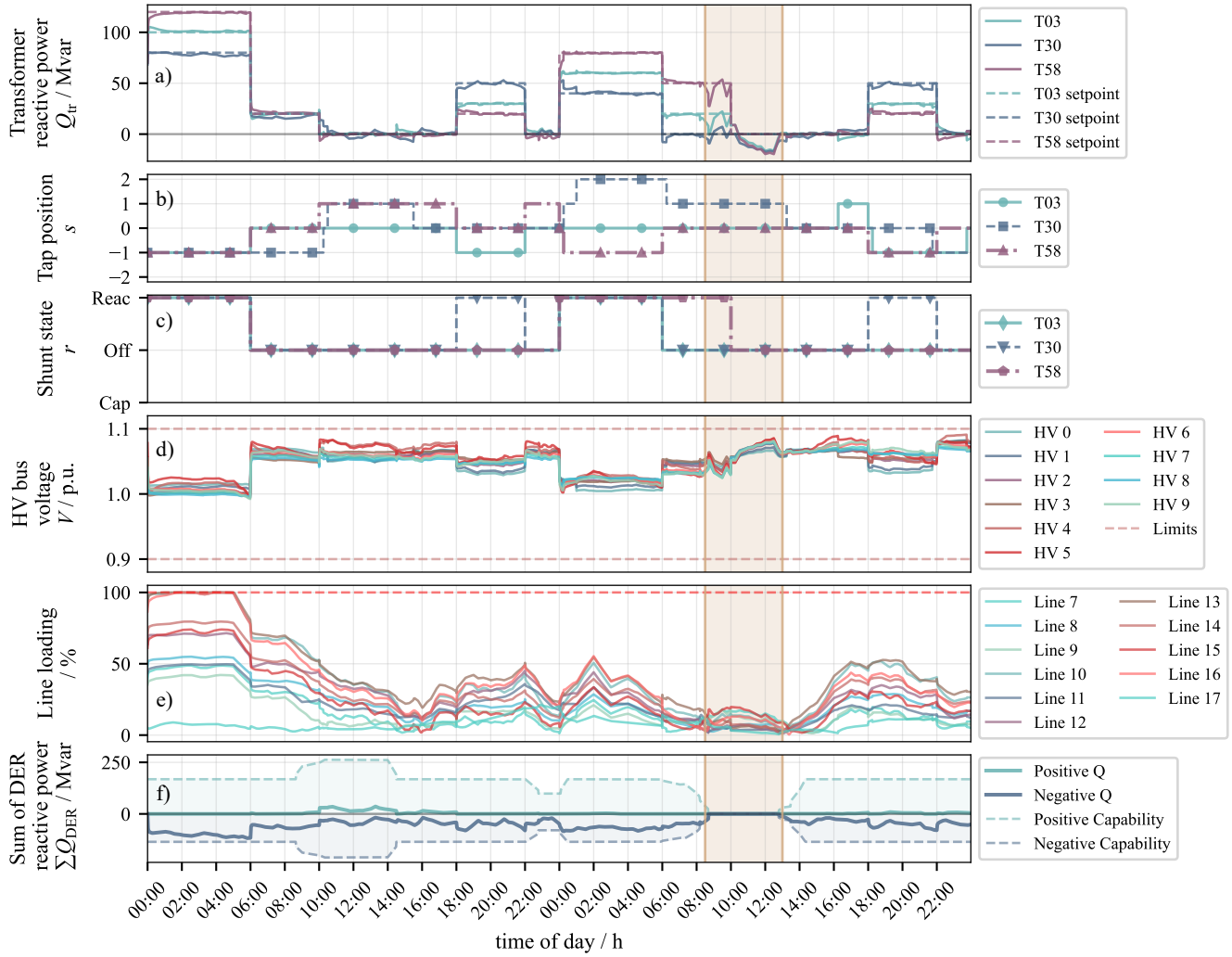

Fig. 5. Detailed Analysis of Hierarchical Controller Performance, two-day hierarchical controller operation (Jan. 5, 2016, 0:00 - Jan. 6, 2016, 23:59). The yellow lines and shaded areas indicate the controller goes into voltage mode because of insufficient control reserves.

TABLE II
CONTROLLER COMPARISON (JAN. 5, 2016, 0:00-23:49), ANALYSING CONTROL PERFORMANCE IN NORMAL OPERATION (REACTIVE POWER MODE).

Indicator	**Setpoint tracking**		**OLTC operations**	**DER usage**	**Sim. time per iteration**
	$\mathbb{E}[\Delta Q_{\text{trafo}}]$	$\sum \Delta Q_{\text{trafo}}$	N_{OLTC}	$\sum Q_{\text{DER}}$	
Unit	Mvar	Mvar·h	-	Mvar·h	s
HIER	1.69	122.00	13	1570.63	0.014
MIQP ($g_s = 80$)	1.29	129.67	25	1621.83	0.053
MIQP ($g_s = 100$)	1.80	129.67	19	1650.49	0.066
MIQP ($g_s = 120$)	1.83	131.71	14	1476.15	0.054
QP+AVR	4.28	308.20	36	1473.17	0.014

projected gradient flow in the OFO layer. Additionally, the supervisory controller's fuzzy rules maintain an appropriate distance from voltage boundaries. Fig. 5 f) shows the sum of DER reactive power capabilities and current DER reactive power infeed. Due to the active-power dependency of these capabilities, the controller switches to voltage mode during periods of insufficient DER availability (day 2, 09:00–13:00), thereby preventing unnecessary OLTC switching and chattering. In this period, the fuzzy controller does not react to reactive power setpoint deviations, but the OLTC is nonetheless operated to prevent over-voltages. In contrast, the MIQP reference controller is not able to operate stably during this period, driving the OLTC to the maximum position whilst trying to track setpoints without DER reserves being available (resulting in 85 OLTC changes in two-day operation, compared to 33 of the hierarchical controller).

In Table II, the performance of the hierarchical controller (HIER) is compared with the MIQP reference controller (MIQP) using different values of g_s. Here, only the first day is compared, during which sufficient DER reserves are available. The hierarchical controller achieves the second-best setpoint tracking performance amongst all investigated controllers whilst reducing daily OLTC operations to 13. Increasing g_s of the MIQP controller leads to a comparable number of OLTC operations, but at the cost of worse setpoint tracking performance. Another important aspect highlighting the scalability of the proposed hierarchical controller is the average simulation time per iteration, which is on average 75.72 % lower for the hierarchical controller compared to the MIQP in the investigated study case. Note that the investigated network has only three coupling transformers, whereas larger networks with more interconnections would further increase the computation time for the MIQP approach.

VI. Conclusions

This paper presents a novel hierarchical control framework for coordinating transformer OLTCs and DER reactive power, addressing the practical limitations of monolithic MIQP approaches. By decomposing control into a supervisory fuzzy logic layer for OLTCs and a corrective Online Feedback Optimisation layer for DERs, the architecture achieves superior stability and computational efficiency.

Comprehensive validation against MIQP and QP+AVR references demonstrates the framework's effectiveness: eliminating OLTC chattering, reducing daily operations to 13 switches, achieving good setpoint tracking (1.69 Mvar mean deviation), while requiring 75.72 % less computation time compared to MIQP. The adaptive mode switching and robust constraint compliance ensure reliable operation across diverse system conditions.

The hierarchical design provides system operators with a scalable, computationally tractable alternative to mixed-integer solutions. This work confirms that well-designed multi-layer architectures, combining a heuristic for supervisory control and a closed-loop controller can effectively harness distributed energy resources for ancillary services whilst maintaining system stability — representing a significant advancement towards more reliable and efficient power system operation.

References

[1] A. Hauswirth, Z. He, S. Bolognani, G. Hug, and F. Dörfler, "Optimization algorithms as robust feedback controllers," 2021. [Online]. Available: https://arxiv.org/pdf/2103.11329

[2] F. Klein-Helmkamp, I. Zettl, F. Schmidtke, L. Ortmann, and A. Ulbig, "Hierarchical provision of distribution grid flexibility with online feedback optimization," 2024.

[3] L. Ortmann, J. Maeght, P. Panciatici, F. Dörfler, and S. Bolognani, "Online feedback optimization for subtransmission grid control," 2022. [Online]. Available: https://arxiv.org/pdf/2212.07795v2

[4] M. Schwenke, F. Korff, and J. Hanson, "Supporting transmission grid voltage control with active distribution grids using online feedback optimisation," in *CIRED 2025 – 28th Conference and Exhibition on Electricity Distribution*, Geneva, 2025.

[5] F. Milano, "Power flow analysis," in *Power System Modelling and Scripting*. Springer, 2010, pp. 61–101.

[6] R. D. Zimmerman, C. E. Murillo-Sanchez, and R. J. Thomas, "Matpower: Steady-state operations, planning, and analysis tools for power systems research and education," *IEEE Transactions on Power Systems*, vol. 26, no. 1, pp. 12–19, 2011.

[7] S. Lemkens, "Structural properties of linearized power flows and power grid design," Ph.D. dissertation, RWTH Aachen University, Aachen, Germany, 2015. [Online]. Available: https://publications.rwth-aachen.de/record/464551

[8] P. S. Kundur and O. P. Malik, *Power System Stability and Control, Second Edition*, second edition ed., ser. McGraw-Hill's AccessEngineeringLibrary. New York, N.Y.: McGraw Hill LLC and McGraw Hill, 2022. [Online]. Available: https://www.accessengineeringlibrary.com/content/book/9781260473544

[9] K. Christakou, J.-Y. LeBoudec, M. Paolone, and D.-C. Tomozei, "Efficient computation of sensitivity coefficients of node voltages and line currents in unbalanced radial electrical distribution networks," *IEEE Transactions on Smart Grid*, vol. 4, no. 2, pp. 741–750, 2013.

[10] S. Meinecke, D. Sarajlić, S. R. Drauz, A. Klettke, L.-P. Lauven, C. Rehtanz, A. Moser, and M. Braun, "Simbench—a benchmark dataset of electric power systems to compare innovative solutions based on power flow analysis," *Energies*, vol. 13, no. 12, p. 3290, 2020.

[11] I. Zettl, F. Klein-Helmkamp, F. Schmidtke, L. Ortmann, and A. Ulbig, "Tuning a cascaded online feedback optimization controller for provision of distributed flexibility," in *2024 International Conference on Smart Energy Systems and Technologies (SEST)*, 2024, pp. 1–6.