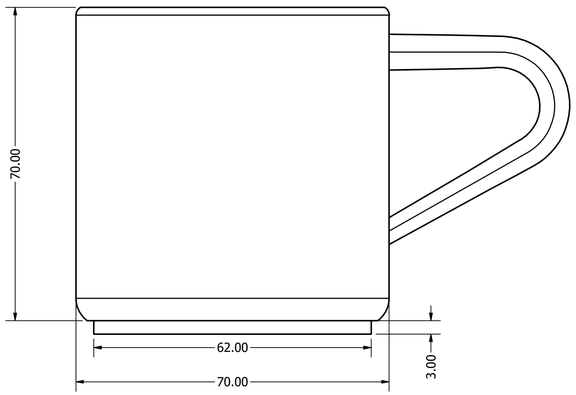

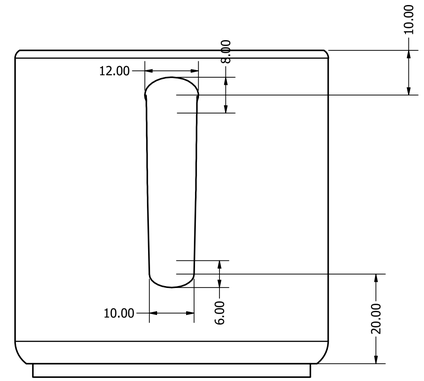

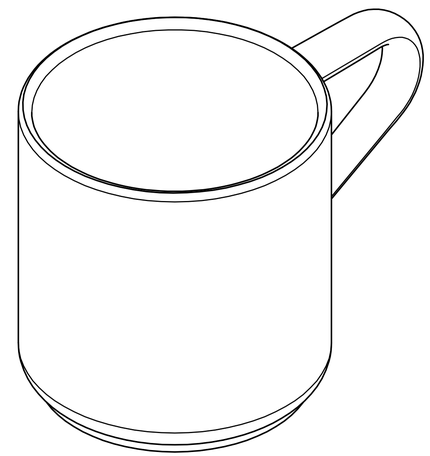

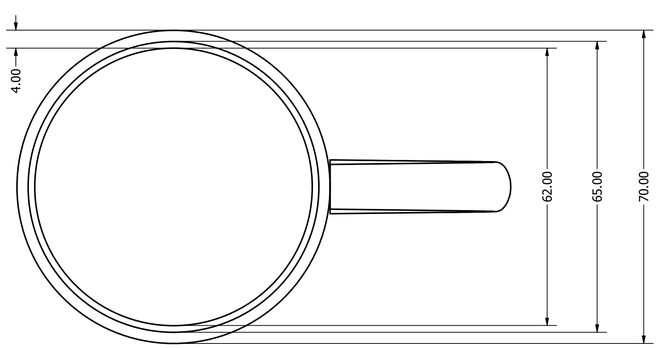

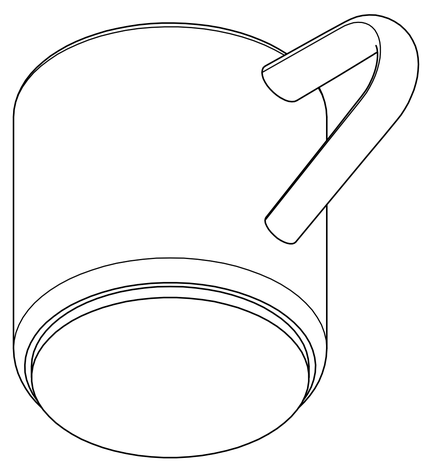

DRAWN manur	16/02/2024			
CHECKED		TITLE		
QA				
MFG				
APPROVED		SIZE D	DWG NO Tasa	REV
		SCALE 1.5:1	SHEET 1 OF 1	