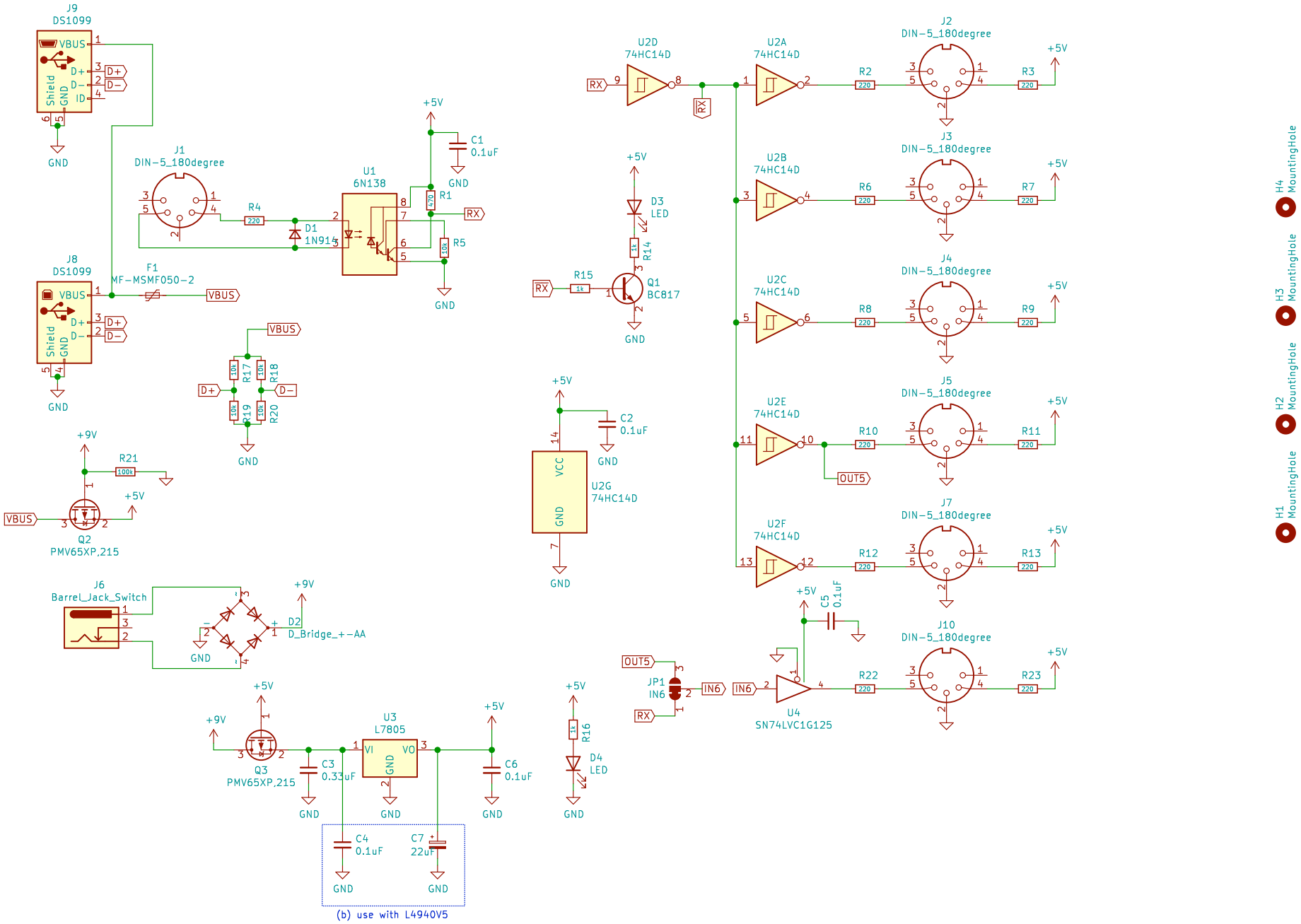
J9
DS1099
VBUS
D+
D−
ID
Shield
GND
J8
DS1099
J1
DIN−5_180degree
R4
220
D1
1N914
U1
6N138
R1
170
R5
10k
C1
0.1uF
F1
MF−MSMF050−2
VBUS
R17
10k
R18
10k
R19
10k
R20
10k
R21
100k
Q2
PMV65XP,215
J6
Barrel_Jack_Switch
D2
D_Bridge_+−AA
Q3
PMV65XP,215
U3
L7805
VI
VO
C3
0.33uF
C4
0.1uF
C7
22uF
C6
0.1uF
(b) use with L4940V5
U2D
74HC14D
U2A
74HC14D
U2B
74HC14D
U2C
74HC14D
U2E
74HC14D
U2F
74HC14D
U2G
74HC14D
VCC
GND
RX
D3
LED
R14
1k
R15
1k
Q1
BC817
C2
0.1uF
R16
1k
D4
LED
J2
DIN−5_180degree
J3
DIN−5_180degree
J4
DIN−5_180degree
J5
DIN−5_180degree
J7
DIN−5_180degree
J10
DIN−5_180degree
R2
R3
R6
R7
R8
R9
R10
R11
R12
R13
R22
R23
OUT5
C5
0.1uF
JP1
IN6
U4
SN74LVC1G125
+5V
+9V
GND
H1
MountingHole
H2
MountingHole
H3
MountingHole
H4
MountingHole