Metal Forming Report

Metal Forming Process Analysis

Name: **Marai Abed Alrahman**

NEPTUN: **AU90X5**

Date: 06. December 2025

Budapest University of Technology and Economics

Budapest University of Technology and Economics
DEPARTMENT OF MATERIALS SCIENCE AND ENGINEERING

Founded: 1889

Project sheet

Metal Forming (BMEGEMTAGE1)

H 01 / 25

AU90X5
Abed Al Rahman Marai
student

1. Plan the forming technology for the workpiece according to the figure and data below.
2. Design the die of the last forming step.

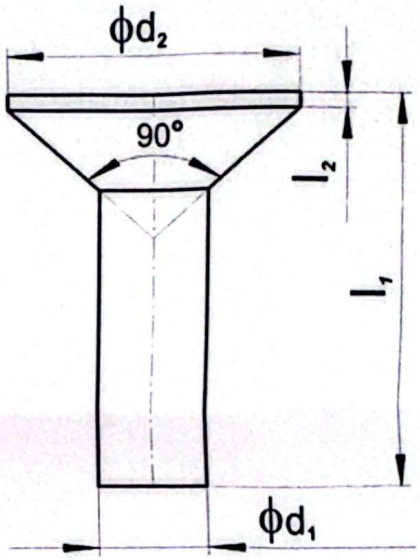

Report Content

- Issued project sheet
- Description of the forming steps, *materials, and geometries*
- *Result of calculations:* analytical and finite element (optional)
- Drawings: full die assembly drawing of the final forming step
- Heat treatment of the active parts

Data:

$d_1 = 8$	$l_1 = 30$	$r_1 = -$
$d_2 = 15$	$l_2 = 16$	$r_2 = -$
$d_3 = -$	$l_3 = -$	$r_3 = -$
$d_4 = -$	$l_4 = -$	$r_4 = -$
$d_5 = -$	$l_5 = -$	$r_5 = -$

Material: C10

Submission deadline: Dec. 11, 2025

Project was issued on: Sep.18, 2025

Dr. András Reé
lecturer

Introduction

The aim is to produce collar bolts out of C10 steel. The following must be established: operating method, stock, force, mechanical work and loading of the tooling, where: $\eta_F = 0.7$.

Billet source and preparation The starting material is supplied as C10 steel bar in coil or straight-rod form with a nominal diameter of 15 mm. The bar is cut to the required length $h_0 = 21.55\,\mathrm{mm}$ using a shearing or sawing operation. The cut faces are kept flat to ensure proper seating in the container, and no further surface preparation is required for the extrusion process.

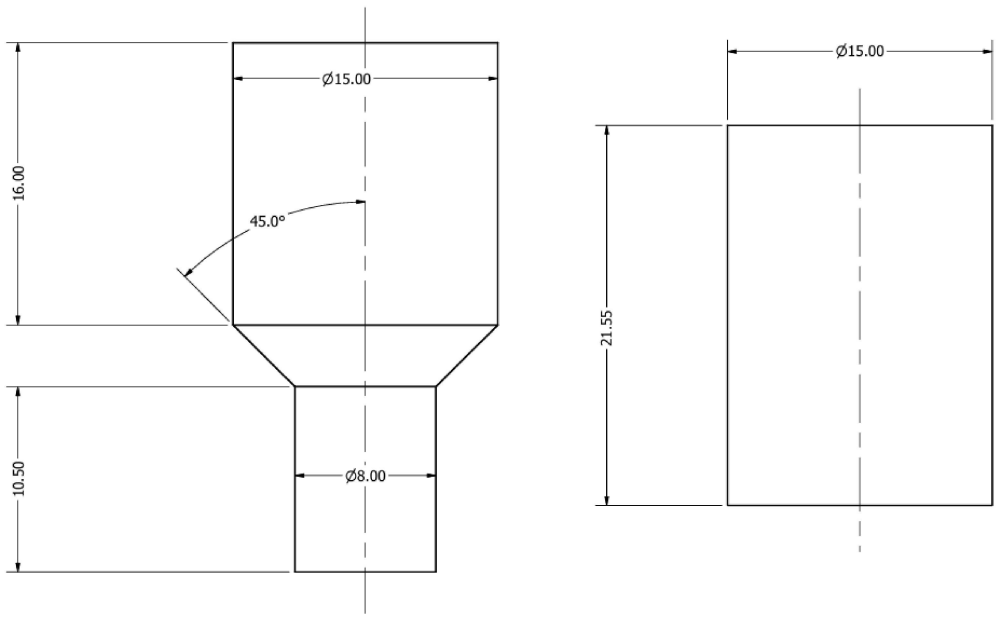

Figure 1: Final Workpiece and Initial Billet

1. Operating method

Forward extrusion.

2. Stock

2.1 Volume of the finished item The finished part consists of a cylindrical collar, a conical transition and a cylindrical shank. The volume is written as

$$V_F = \frac{D^2\pi}{4}\,h_1 + \frac{\pi}{12}\,h_2\left(D^2 + D\cdot d + d^2\right) + \frac{d^2\pi}{4}\,h_3.$$

$$V_F = \frac{\pi}{4}\left[D^2 h_1 + \frac{h_2}{3}\left(D^2 + D\cdot d + d^2\right) + d^2 h_3\right].$$

$$V_F = 0.785\left[(15\,\mathrm{mm})^2\cdot 16\,\mathrm{mm} + \frac{3.5\,\mathrm{mm}}{3}\left(225\,\mathrm{mm}^2 + 15\,\mathrm{mm}\cdot 8\,\mathrm{mm} + 64\,\mathrm{mm}^2\right) + (8\,\mathrm{mm})^2\cdot 10.5\,\mathrm{mm}\right]$$

$$V_F = 3730\,\mathrm{mm}^3.$$

Here: $D = 15\,\mathrm{mm}$ (collar diameter), $d = 8\,\mathrm{mm}$ (shank diameter), $h_1 = 16\,\mathrm{mm}$ (collar length), $h_2 = 3.5\,\mathrm{mm}$ (cone height), $h_3 = 10.5\,\mathrm{mm}$ (shank length).

2.2 Volume and dimensions of the stock The stock volume is taken equal to the finished volume:

$$V_B = V_F = 3730\,\mathrm{mm}^3.$$

The billet diameter is selected as $D_0 = 15\,\mathrm{mm}$.

$$A_0 = \frac{\pi D_0^2}{4} = \frac{(15\,\mathrm{mm})^2\pi}{4} = 176.71\,\mathrm{mm}^2.$$

$$h_0 = \frac{V_B}{A_0} = \frac{3730\,\mathrm{mm}^3}{176.71\,\mathrm{mm}^2} = 21.55\,\mathrm{mm}.$$

3. Force F

3.1 Equivalent strain For axisymmetric forward extrusion the equivalent strain is

$$\varphi_p = 2\ln\frac{D_0}{d} = 2\ln\frac{15}{8} = 1.254.$$

3.2 Flow stresses and mean flow stress The C10 flow curve is taken in the form

$$\sigma_f = 258 + 421\,\varphi_p^{0.658} \quad [\mathrm{N/mm}^2].$$

At $\varphi_p = 0$ and $\varphi_p = 1.254$:

$$k_{\mathrm{str0}} = \sigma_f(0) = 258\,\mathrm{N/mm}^2, \qquad k_{\mathrm{str1}} = \sigma_f(1.254) = 746\,\mathrm{N/mm}^2.$$

The mean flow stress for the deformation interval is

$$k_{\mathrm{strm}} = \frac{k_{\mathrm{str0}} + k_{\mathrm{str1}}}{2} = \frac{258 + 746}{2} = 502\,\mathrm{N/mm}^2.$$

3.3 Forming force

$$F = \frac{A_0\,k_{\mathrm{strm}}\,\varphi_p}{\eta_F} = \frac{176.71\,\mathrm{mm}^2 \cdot 502\,\mathrm{N/mm}^2 \cdot 1.254}{0.7} = 1.58 \times 10^5\,\mathrm{N} = 158\,\mathrm{kN}.$$

4. Work W

The active stroke is taken as the reduction of height of the billet:

$$s_w = h_0 - h_1 = 21.55\,\mathrm{mm} - 16\,\mathrm{mm} = 5.55\,\mathrm{mm} = 0.00555\,\mathrm{m}.$$

The mechanical work is

$$W = F \cdot s_w = 158\,\mathrm{kN} \cdot 0.00555\,\mathrm{m} = 0.88\,\mathrm{kNm}.$$

5. Forming pressure

The mean pressure acting on the billet in the deformation zone is

$$p = \frac{F}{A_0} = \frac{1.58 \times 10^5\,\mathrm{N}}{176.71\,\mathrm{mm}^2} = 893.84\,\mathrm{N/mm}^2.$$

This value is used as the internal pressure p_i in the die stress calculations.

6. Punch loading

The punch diameter equals the container bore, $D_p = 15\,\mathrm{mm}$, therefore

$$A_p = \frac{\pi D_p^2}{4} = 176.71\,\mathrm{mm}^2.$$

The axial stress in the punch is

$$\sigma_{\mathrm{ax},p} = \frac{F}{A_p} = \frac{1.58 \times 10^5\,\mathrm{N}}{176.71\,\mathrm{mm}^2} = 893.84\,\mathrm{N/mm}^2.$$

The punch is made of high–speed tool steel 1.3343 (HSS M2), hardened and tempered to about 60–63 HRC. Its compressive strength is approximately 2500–3000 $\mathrm{N/mm}^2$. The calculated stress is therefore safely below the material limit.

For buckling control, the Euler load is checked. With an effective punch length $L = 40\,\mathrm{mm}$, modulus of elasticity $E = 210\,000\,\mathrm{N/mm}^2$ and second moment of area

$$I = \frac{\pi D_p^4}{64} = \frac{\pi (15\,\mathrm{mm})^4}{64} = 2483\,\mathrm{mm}^4,$$

the critical load is

$$P_{\mathrm{cr}} = \frac{\pi^2 E I}{L^2} = \frac{\pi^2 \cdot 210\,000 \cdot 2483}{40^2} = 3.22 \times 10^6\,\mathrm{N} = 3220\,\mathrm{kN}.$$

Since $P_{\mathrm{cr}} \gg F = 158\,\mathrm{kN}$, the punch is safe against elastic buckling.

5.8 Reinforcement calculation for single-reinforced dies

D	in mm	external diameter of the retaining ring (generally depends on the insertion bore of the machine)
d_J	in mm	junction diameter
d	in mm	inside diameter of the die
R_{e_1}	inN/mm^2	elastic limit of the hardened die
R_{e_2}	inN/mm^2	elastic limit of the reinforcement ring
p_i	inN/mm^2	internal pressure in the tool
F_p	in N	punch force during extrusion

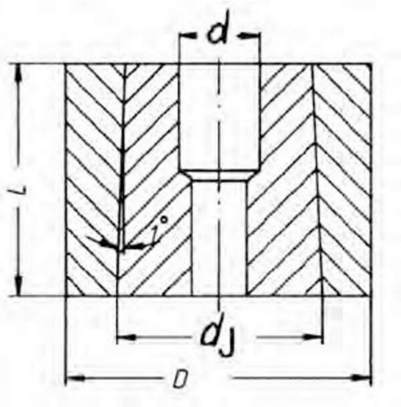

7. Die insert and shrink ring

For steel extrusion the die must be reinforced. The die insert is treated as a thick-walled cylinder with internal pressure $p_i = 893.84\,\mathrm{N/mm^2}$ and bore diameter $d = 15\,\mathrm{mm}$.

The reinforcement calculation follows Tschätsch (Metal Forming Practice, Section 5.8) for single-reinforced dies.

7.1 Given data

$$p_i = 894\,\mathrm{N/mm^2}, \quad D = 60\,\mathrm{mm}, \quad d = 15\,\mathrm{mm},$$
$$R_{e1} = 2100\,\mathrm{N/mm^2} \quad , \quad R_{e2} = 1400\,\mathrm{N/mm^2}$$

7.2 Junction diameter The junction diameter between die and ring is estimated by

$$d_j = 0.9\sqrt{D \cdot d} = 0.9\sqrt{60\,\mathrm{mm} \cdot 15\,\mathrm{mm}} = 27\,\mathrm{mm}.$$

The selected value is

$$d_j = 28\,\mathrm{mm}.$$

7.3 Supporting pressure ratio and material ratio

$$p_c = \frac{p_i}{R_{e1}} = \frac{894}{2100} = 0.426,$$

$$K_1 = \frac{R_{e1}}{R_{e2}} = \frac{2100}{1400} = 1.50.$$

7.4 Auxiliary factor Q_1

$$Q_1 = \sqrt{\frac{1}{2}\left(1 + \frac{1}{K_1}\right)} - p_c = \sqrt{\frac{1}{2}\left(1 + \frac{1}{1.50}\right)} - 0.426 = 0.486.$$

7.5 Required interference The necessary radial interference between die and ring is

$$z_1 = \frac{d_j R_{e1}}{E}\left[\frac{1}{K_1}\left(1 - Q_1^2\right)\right], \quad E = 210\,000\,\mathrm{N/mm^2}.$$

$$1 - Q_1^2 = 1 - 0.486^2 = 0.764, \qquad \frac{1}{K_1} = \frac{1}{1.50} = 0.667.$$

$$\frac{1}{K_1}(1 - Q_1^2) = 0.667 \cdot 0.764 = 0.509.$$

$$\frac{d_j R_{e1}}{E} = \frac{28\,\mathrm{mm} \cdot 2100\,\mathrm{N/mm^2}}{210\,000\,\mathrm{N/mm^2}} = 0.28\,\mathrm{mm}.$$

$$z_1 = 0.28\,\mathrm{mm} \cdot 0.509 = 0.143\,\mathrm{mm}.$$

The required interference is therefore

$$z_1 = 0.14\,\mathrm{mm}.$$

This ensures that the circumferential stresses in both the die and the reinforcement ring remain below their elastic limits under the extrusion pressure.

8. Summary of die geometry

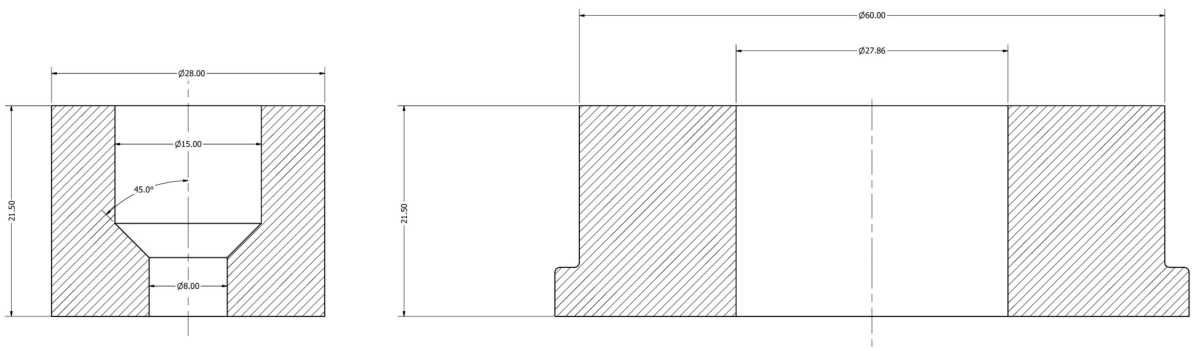

Figure 2: Die and Shrink Ring

Pressure plate calculation

$$F = 158000 \text{ N}, \quad D_{\text{pl}} = 35 \text{ mm}, \quad t_{\text{pl}} = 5.5 \text{ mm}$$

$$A_{\text{pl}} = \frac{\pi D_{\text{pl}}^2}{4}$$

$$A_{\text{pl}} = \frac{\pi \cdot 35^2}{4} = 961.63 \text{ mm}^2$$

$$p_{\text{top}} = \frac{F}{A_{\text{pl}}}$$

$$p_{\text{top}} = \frac{158000}{961.63} = 164.29 \text{ MPa}$$

$$p_{\text{top}} = 164.29 \text{ MPa}$$

The top die house plate is made from C45 steel with

$$\sigma_y = 250 \text{ MPa}$$

$$p_{\text{top}} < \sigma_y$$

Therefore the top plate does not plastically deform. The pressure plate is made from pre-hardened 1.2312 steel to safely transmit the load from the punch to the C45 top plate.

Ejector pin

The ejector pin only removes the finished part after extrusion and does not experience forming pressure. Its loading is limited to the ejection force. The geometry is

$$d_e = 6\,\text{mm}, \qquad h_e = 20.5\,\text{mm}.$$

The cross-sectional area is

$$A_e = \frac{\pi d_e^2}{4} = \frac{\pi \cdot 6^2}{4} = 28.27\,\text{mm}^2.$$

With a conservative ejection force of

$$F_e = 5000\,\text{N},$$

the compressive stress is

$$\sigma_{\text{comp}} = \frac{F_e}{A_e} = \frac{5000}{28.27} = 176.85\,\text{MPa}.$$

The ejector is made from normalized C45 steel, whose yield strength is

$$R_{p0.2,\text{C45(norm.)}} \approx 250\,\text{MPa}.$$

Since

$$\sigma_{\text{comp}} < R_{p0.2},$$

the ejector pin operates safely without heat treatment. C45 provides sufficient strength and toughness for this low-load, non-forming tool element, and further alloying or hardening is not required.

Material selection of active elements

Table 1: Selected materials for active tooling elements

Element	Function	Material	Hardness
Punch	Forms billet by forward extrusion	1.3343 (HS6-5-2, HSS M2)	60–63 HRC
Die insert	Shapes collar and shank	1.2379 (X153CrMo12-1, D2)	58–60 HRC

Heat treatment of active elements

Table 2: Heat treatment orders for active tooling elements

Element	Material	Heat treatment order	Final hardness
Punch	1.3343 (HSS M2)	1) Preheat at 500°C for 20 min. 2) Second preheat at 900°C for 15 min. 3) Austenitize at 1210°C for 5 min . 4) Quench in salt bath to 560°C, then air cool to room temperature. 5) Temper three times for 1 h each at 550°C, air cooling between tempers.	60–63 HRC
Die insert	1.2379 (D2)	1) Preheat at 500°C for 20 min. 2) Second preheat at 880°C for 10 min. 3) Austenitize at 1030°C for 6 min. 4) Vacuum or gas quench to 60°C. 5) Temper twice for 1 h each at 530°C, air cooling between tempers.	58–60 HRC

The heat treatment parameters above are selected according to typical tool steel datasheets and recommendations in Schuler, *Metal Forming Handbook*, for small cold forming tools.

Heat treatment diagrams

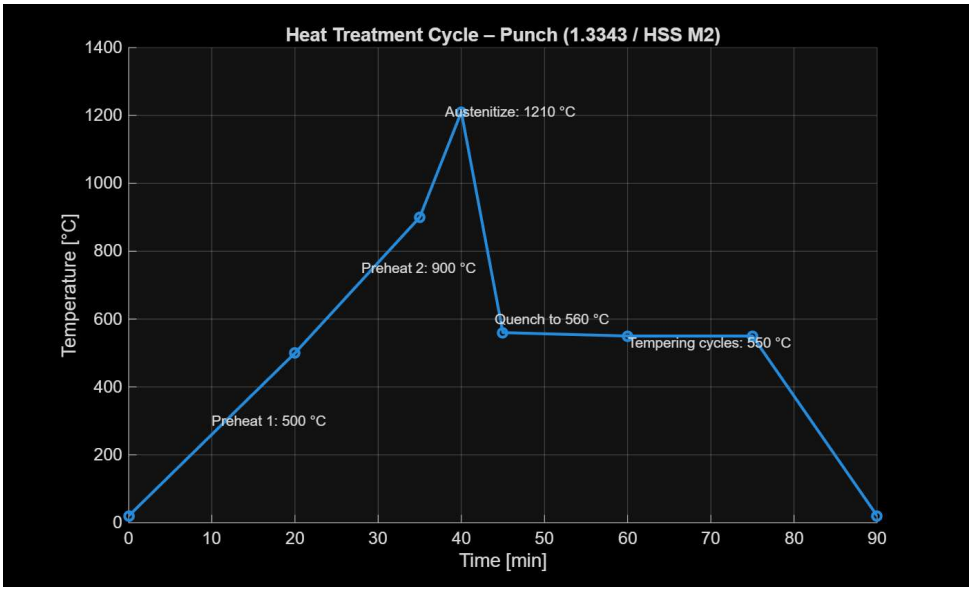

Figure 3: Heat treatment cycle of the punch (1.3343 – HSS M2).

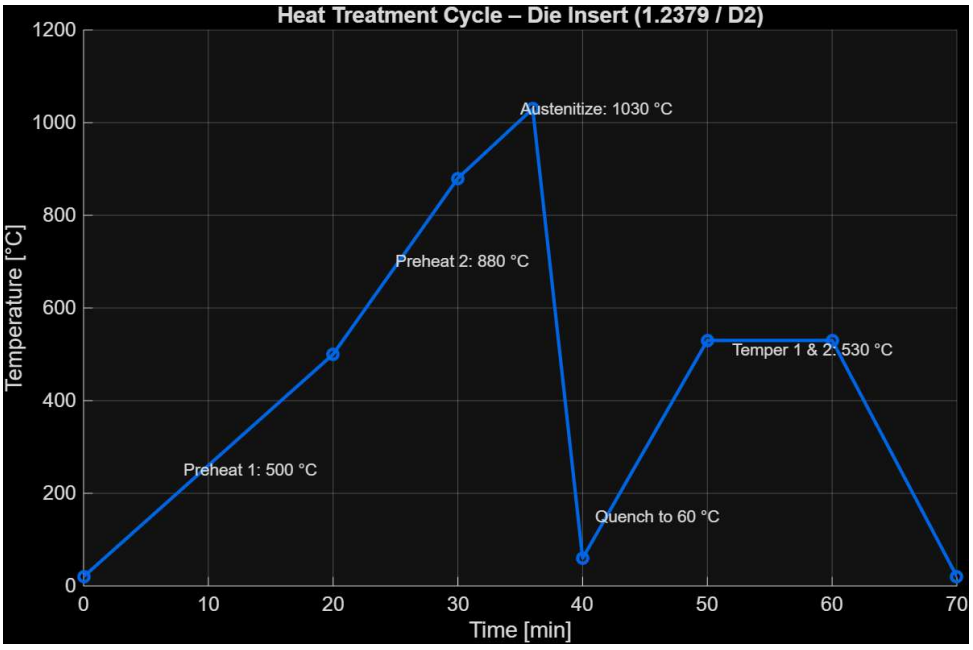

Figure 4: Heat treatment cycle of the die insert (1.2379 – D2).

References

1. Schuler GmbH, *Metal Forming Handbook*, Springer-Verlag, 1998.
   Used for: general metal forming theory, die loading, stress analysis, extrusion principles, and reinforcement ring design background.

2. Tschätsch, Heinz, *Metal Forming Practice: Processes – Machines – Tools*, Springer-Verlag, 2006.
   Used for: shrink ring reinforcement calculations, interference fit design, supporting pressure ratio, and junction diameter estimation.

3. Böhler / Voestalpine High Performance Metals, *Böhler M2 (S600) Technical Datasheet.*
   Used for: heat treatment cycle (preheat, austenitize, quench, triple temper) and hardness values for the punch material 1.3343 (HSS M2).

4. Uddeholm AB, *Uddeholm Sverker 1 (AISI D2) Technical Datasheet.*
   Used for: austenitizing temperature, tempering temperature, and final hardness for 1.2379 (D2) die insert.

5. Voestalpine / Böhler, *Material Datasheet – 1.2312 (40CrMnMoS8-6).*
   Used for: pressure plate material selection and recommended hardness range for pre-hardened tool steel components.

6. AISI / ASTM Standard Tool Steel Heat Treatment Guidelines.
   Used for: verification of selected hardening temperatures, quenching media, temper selection, and hardness for cold-work and hot-work tool steels.

7. ASM International, *Heat Treater's Guide: Practices and Procedures for Steels.*
   Used for: cross-checking tempering curves and confirming realistic processing times for small tooling components in cold extrusion dies.

MATLAB code for heat treatment diagrams

Punch – 1.3343 (HSS M2)

```
%% Punch Heat Treatment Cycle (1.3343 / HSS M2)
clear; close all; clc;

t = [0 20 35 40 45 60 75 90];        % time [min]
T = [20 500 900 1210 560 550 550 20]; % temperature [°C]

figure; hold on;
plot(t, T, '-o', 'LineWidth', 2);
grid on;
xlabel('Time [min]');
ylabel('Temperature [°C]');
title('Heat Treatment Cycle { Punch (1.3343 / HSS M2)');
set(gca, 'FontSize', 12);

% Annotate stages
text(10, 300, 'Preheat 1: 500 °C', 'FontSize', 10);
text(28, 750, 'Preheat 2: 900 °C', 'FontSize', 10);
text(38, 1210, 'Austenitize: 1210 °C', 'FontSize', 10);
text(44, 600, 'Quench to 560 °C', 'FontSize', 10);
text(60, 530, 'Tempering cycles: 550 °C', 'FontSize', 10);

saveas(gcf, 'punch_ht_cycle_labeled.png');
```

Die insert – 1.2379 (D2)

```
%% Die Insert Heat Treatment Cycle (1.2379 / D2)

t = [0 20 30 36 46 56 66];          % time [min]
T = [20 500 880 1030 530 530 20];   % temperature [°C]

figure; hold on;
plot(t, T, '-o', 'LineWidth', 2, 'Color', [0 0.4 0.9]);
grid on;
xlabel('Time [min]');
ylabel('Temperature [°C]');
title('Heat Treatment Cycle { Die Insert (1.2379 / D2)');
set(gca, 'FontSize', 12);

% Annotate stages
text(10, 300, 'Preheat 1: 500 °C', 'FontSize', 10);
text(25, 700, 'Preheat 2: 880 °C', 'FontSize', 10);
text(34, 1030, 'Austenitize: 1030 °C', 'FontSize', 10);
text(46, 580, 'Quench to ~60 °C', 'FontSize', 10);
text(52, 500, 'Double Temper: 530 °C', 'FontSize', 10);

saveas(gcf, 'die_insert_ht_cycle_labeled.png');
```