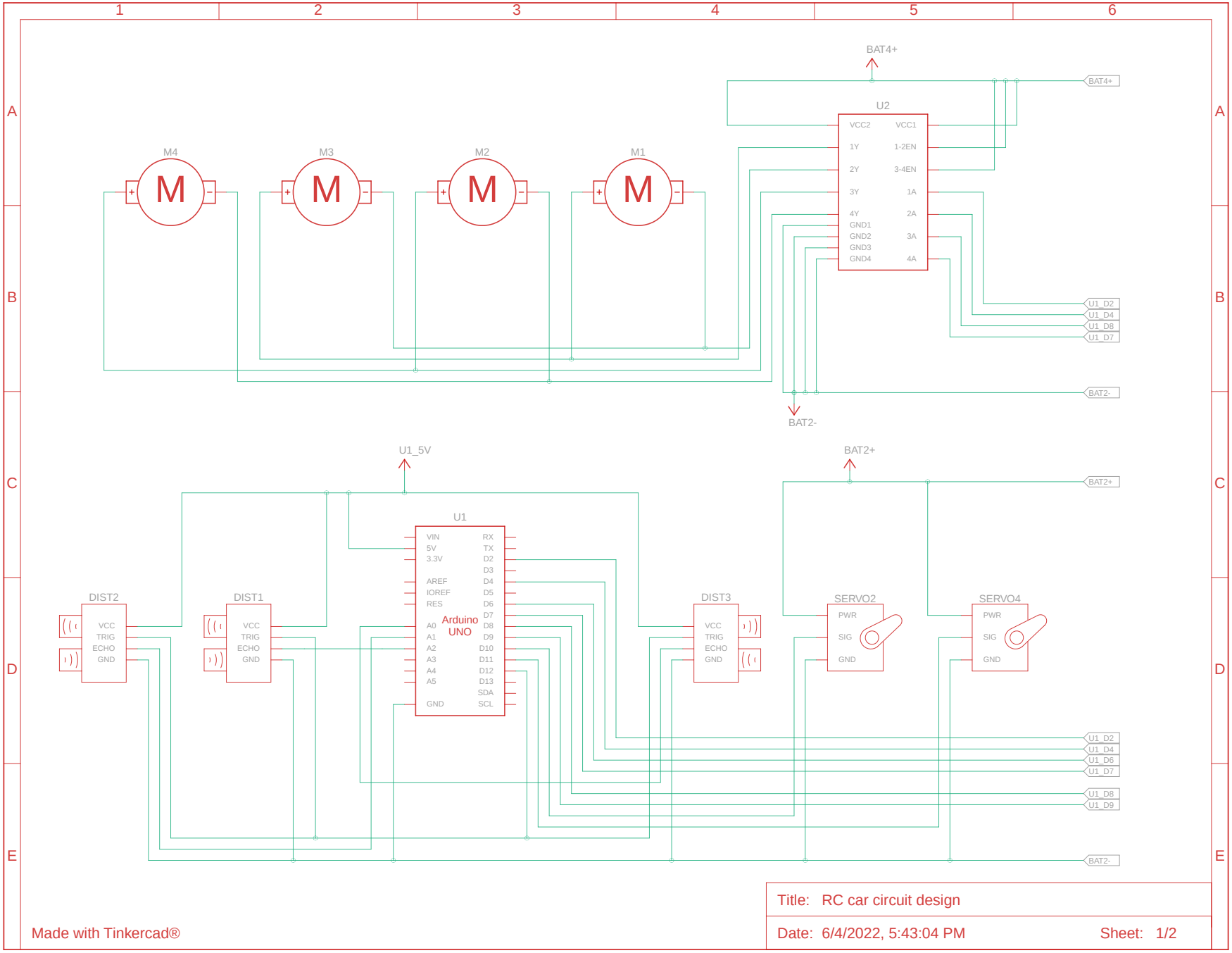


Made with Tinkercad®

Title: RC car circuit design

Date: 6/4/2022, 5:43:04 PM

Sheet: 1/2

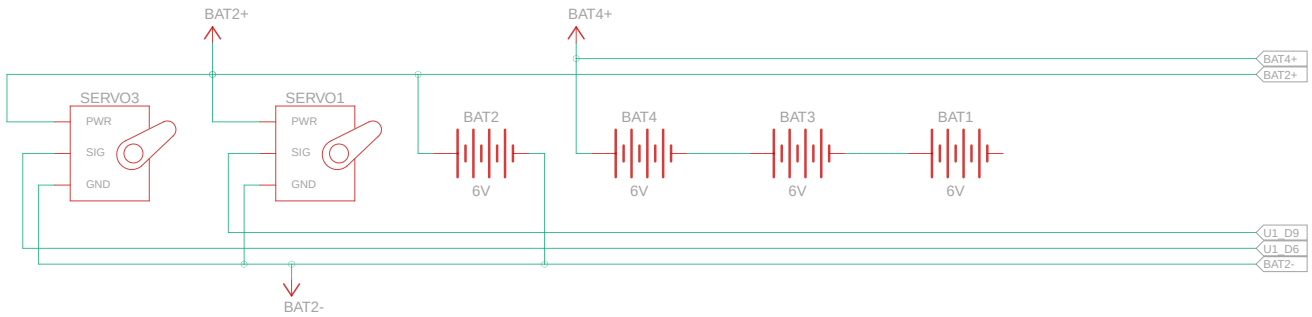


Made with Tinkercad®

| | |
|---|---|
| Title: RC car circuit design | |
| Date: 6/4/2022, 5:43:04 PM | Sheet: 2/2 |