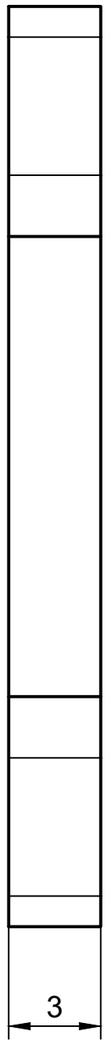

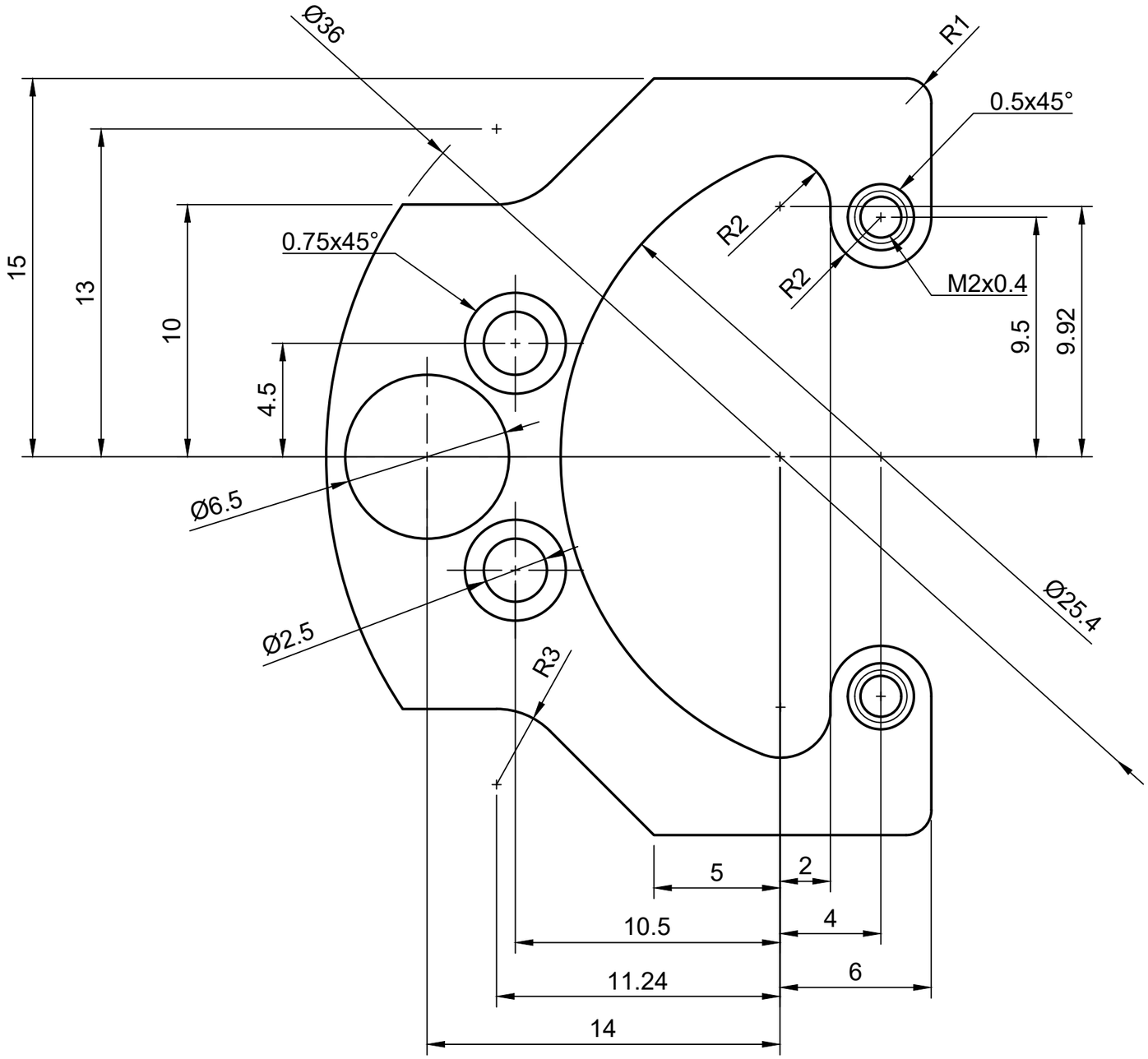

Material: Aluminium

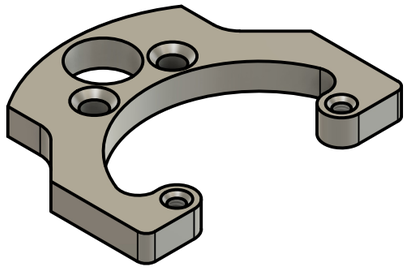

Dept.	Technical reference	Created by Marc Drewing 14.08.2025	Approved by
		Document type	Document status
		Title Glasträger B Part 1	DWG No.
			Rev. 1 / Date of issue / Sheet 1/1