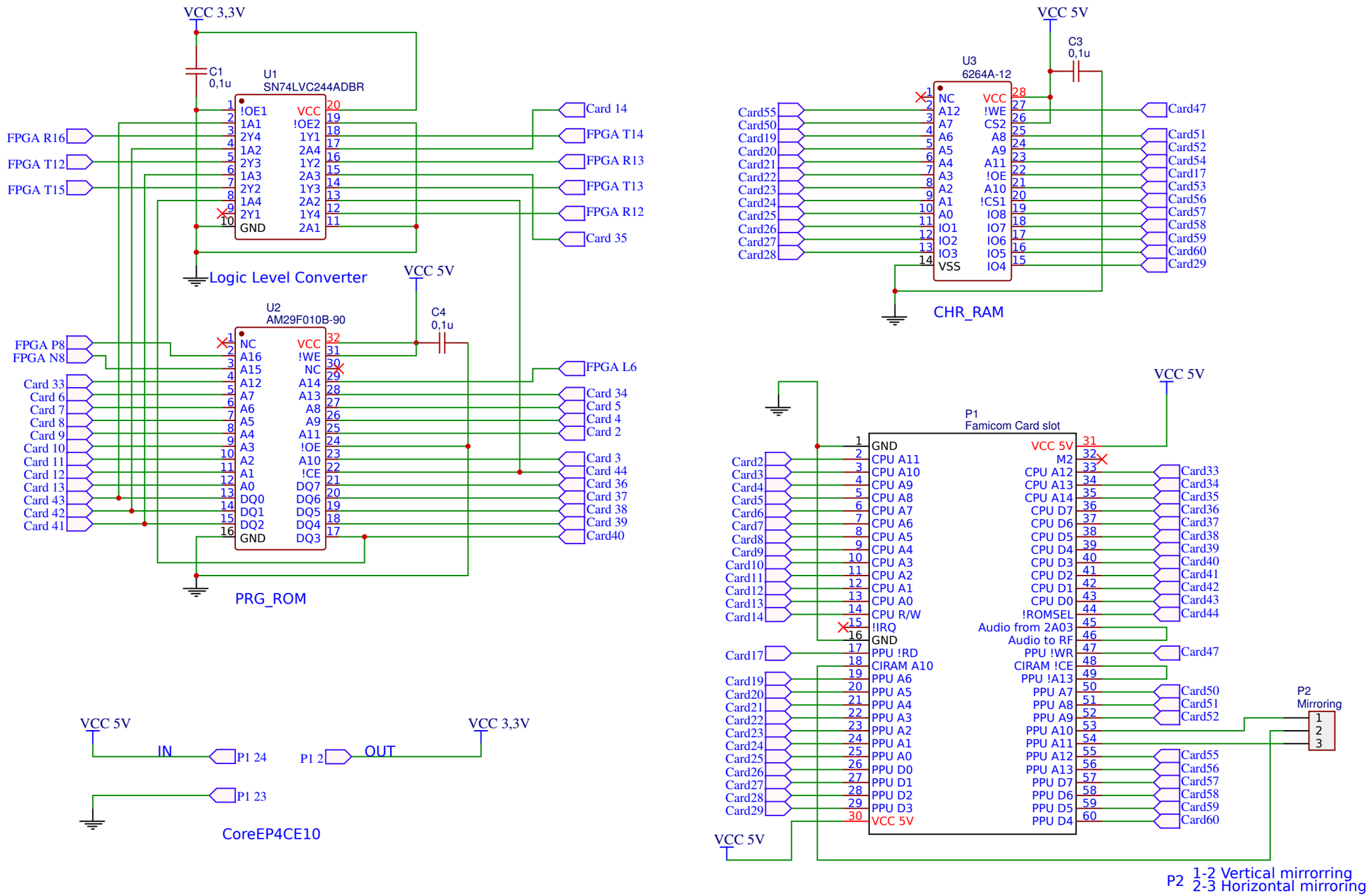

TITLE: UNROM card with FPGA	REV: 1.0
Date: 2017-09-02	Sheet: 1/1
EasyEDA V4.7.8	Drawn By: Kirichenko A.A.