# A formalized reduction of the Mullin's Conjecture

Marcello Paris

March 2026

**Abstract**

The Euclid–Mullin sequence is defined by $a(0) = 2$, $a(n+1) = \mathrm{lpf}(a(0) \cdots a(n) + 1)$, where lpf is the least prime factor. Mullin's Conjecture (MC, 1963) asserts that every prime eventually appears. We present a Lean 4 formalization (∼56,050 lines, 104 files, zero `sorry`) that reduces MC to a single open hypothesis.

The main result is the machine-verified chain

$$\mathrm{DSL} \implies \mathrm{CME} \implies \mathrm{CCSB} \implies \mathrm{MC},$$

where **Conditional Multiplier Equidistribution** (CME) states that the minFac operation destroys correlation between consecutive multiplier residues mod $q$, and the **Deterministic Stability Lemma** (DSL) asserts that population-level equidistribution of least prime factors—a standard consequence of analytic number theory—transfers to conditional equidistribution for the specific EM orbit. DSL is the sole remaining hypothesis: it is the statement PE ⇒ CME, where PE is the population equidistribution that follows from Alladi's theorem on least prime factors.

The reduction proceeds in stages. An *inductive bootstrap* recasts MC as a walk-hitting problem on $(\mathbb{Z}/q\mathbb{Z})^\times$ and shows the algebraic precondition (SubgroupEscape) is free. A *character-analytic bridge* proves CME ⇒ CCSB for all character orders, bypassing the $d \geq 3$ barrier. An *ensemble averaging* framework, parametrizing the EM construction by squarefree starting points and using CRT decorrelation, collapses the full landscape to DSL. An independent route through *Visit Equidistribution* (VE)—the walk visits every residue class with equal frequency—also implies MC via a separate machine-verified chain, bypassing CME entirely.

Over 134 dead ends are documented, trying to delineate the boundary of current methods as precisely as possible.

**Statements and proofs.** Theorems marked ✓ name are formally verified in Lean 4; clicking the identifier links to the source code. Most proofs are sketched rather than fully reported; correctness is guaranteed by the type-checker. Some misalignment may exist between what is stated here and what is proved in the formalization; the Lean source is the authoritative reference. To mitigate this risk, we used LeanArchitect [19] to cross-check the 20 key declarations against the paper's theorem statements; this process uncovered one missing precondition, now corrected. All published results and open hypotheses are tagged with `@[publish]` and `@[open_point]` annotations in the GitHub repository (`https://github.com/marcellop71/EM`), using the CA content-addressing framework for Lean 4; a machine-readable registry is available in the `registry/` folder.

# Contents


**1 Introduction** **3**
1.1 The Bag-Theoretic Structure of the Euclid–Mullin Dynamics . . . 5
1.2 Methodology: Human–AI Collaboration . . . 8

**2 The Residue Walk** **9**
2.1 The forbidden multiplier and the death channel . . . 11
2.2 The Confinement Theorem and SubgroupEscape . . . 11
2.3 The first missing prime . . . 12

**3 The Inductive Bootstrap** **12**
3.1 The death channel avoidance paradox . . . 13
3.2 Sufficient conditions for the single hit . . . 13
3.3 Supporting Infrastructure . . . 15

**4 The Character Sum Reduction** **16**
4.1 Character Sums and Permanent Avoidance . . . 16
4.2 The Fourier Bridge . . . 17
4.3 The Decorrelation–PED–CCSB Chain . . . 17
4.4 Vanishing Conditional Bias . . . 19
4.5 Walk Telescoping Identities . . . 21

**5 Ensemble Averaging and the DSL Route** **23**
5.1 CRT Equidistribution and Propagation . . . 24
5.2 The Decorrelation–Variance–Concentration Chain . . . 25
5.3 The DSL Route to MC . . . 29
5.4 Generalized MC and the Weyl Hitting Bridge . . . 33
5.5 Visit Equidistribution and the Spectral Identity . . . 36
5.6 Tail Window Decorrelation . . . 37
5.7 The Reduction Landscape . . . 38

**6 Why It's Hard** **38**
6.1 The Selectability Perspective . . . 39
6.2 The BRE Impossibility for $d \geq 3$ . . . 40
6.3 The Factorization Independence Heuristic . . . 40
6.4 Open Problems and Paths Forward . . . 43

**7 The Lean Formalization** **48**
7.1 Axiom Usage: What's Constructive . . . 51
7.2 Mathlib Dependencies . . . 51
7.3 ANT Formalization Status . . . 51
7.4 Summary of Formally Verified Results . . . 53

**A Appendix** **68**
A.1 History and Computational Status . . . 68
A.2 Analogies and Context . . . 69
A.3 The Function Field Analog . . . 71
A.4 Additional Sieve and Spectral Routes . . . 73
A.5 Weak Mullin and Confined Energy . . . 75
A.6 Dead Ends Catalogue . . . 78
A.7 Glossary of Definitions and Hypotheses . . . 79

# 1 Introduction

Euclid's proposition IX.20 of the *Elements* shows that for any finite set of primes, each prime factor of their product plus one is outside the set [6]: to grow your set of primes, you can pick any of them. The **Euclid–Mullin sequence** (OEIS A000945), introduced by Mullin [1], makes a definite choice: always take the *smallest* prime factor.

$$a(0) = 2, \qquad a(n+1) = \text{smallest prime factor of } \big(a(0)\cdots a(n)+1\big). \tag{1}$$

The first twenty terms (0-indexed) are

$$\underbrace{2}_{a(0)},\ 3,\ 7,\ 43,\ 13,\ 53,\ \underbrace{5}_{a(6)},\ \underbrace{6221671}_{a(7)},\ 38709183810571,$$
$$139,\ 2801,\ \underbrace{11}_{a(11)},\ 17,\ 5471,\ 52662739,\ 23003,\ 30693651606209,$$
$$\underbrace{37}_{a(17)},\ 1741,\ \underbrace{1313797957}_{a(19)},\ \ldots$$

The sequence shows an erratic behavior: small primes appear out of their natural order (5 not until position 6, 11 at position 11, 37 at position 17), while enormous primes—a 7-digit number at position 7, a 14-digit number at position 8—appear early. As of 2025, only 51 terms are known and some primes like 41 and 47 are not yet observed. Computing further terms requires *complete* factorization of $\mathrm{P}_2(n)+1$ (where $\mathrm{P}_2(n) \coloneqq a(0)\cdots a(n)$ is the running product): finding any prime factor is not enough—one must certify that no smaller factor exists. Since $\mathrm{P}_2(n)$ grows super-exponentially, this quickly exceeds the reach of all known factoring algorithms. By construction, no prime can appear twice.

**Conjecture 1.1** (Mullin, 1963)**.** *Every prime number eventually appears in the Euclid–Mullin sequence.*

The conjecture has resisted proof for over sixty years. The difficulty is showing that the deterministic minFac rule eventually *selects* each prime. That the rule matters is not idle speculation: Cox and van der Poorten [11] showed that replacing minFac with the *largest* prime factor provably misses infinitely many primes.

Each step couples the next prime to the full factorization history, creating a recursive dependency that defeats both probabilistic heuristics and standard sieve methods.

At each step, $\mathrm{P}_2(n)+1$ may have many prime factors, and just the *smallest* is chosen. So, a target prime $q$ may possibly divide $\mathrm{P}_2(n)+1$ for many (maybe infinite) $n$, yet never be selected if a smaller prime always divides $\mathrm{P}_2(n)+1$ as well. Our formalization tries to make this tension precise.

**The accumulator structure.** The running product $\mathrm{P}_2(n)$ is an *accumulator*: a single number that commits to the entire sequence history via irreversible multiplication, analogous to the cumulative digest in a hash chain. The accumulator poses a challenge $\mathrm{P}_2(n)+1$; the response $\mathrm{minFac}(\mathrm{P}_2(n)+1)$ extends the chain; and the updated accumulator $\mathrm{P}_2(n+1) = \mathrm{P}_2(n)\cdot\mathrm{minFac}(\mathrm{P}_2(n)+1)$ absorbs the response irreversibly—once a prime enters the product, it divides every future product and can never appear again (Theorem 6.3).

This accumulator coupling is what makes standard tools fail. Sieve methods require approximate independence between the events "$p \mid m$" for different $m$; here successive challenges $\mathrm{P}_2(n)+1$ share a cumulative history. Ergodic methods require a fixed or state-dependent map; here the map at step $n$ depends on the full accumulator, not just the current residue. The walk reformulation (Section 2) tames this coupling by projecting the accumulator onto a finite group: $\mathrm{P}_{2,q}(n) = \mathrm{P}_2(n) \bmod q$ preserves the divisibility information relevant to $q$ while discarding the

accumulator's combinatorial complexity. But the information lost in this projection is exactly the source of difficulty: the walk position determines *whether* $q$ can divide $\mathrm{P}_2(n) + 1$; the full accumulator determines *which* prime is actually selected. Every open hypothesis in this paper addresses this gap.

**The factoring channel.** The accumulator structure of the EM sequence is closely analogous to a cryptographic hash chain: each term is deterministically derived from its predecessor through an operation—integer factorization—that destroys algebraic relationships. In an iterated SHA-256 chain $x_0, H(x_0), H(H(x_0)), \ldots$, each value is uniquely determined by the seed, yet consecutive terms pass every reasonable statistical test for independence. In the EM sequence, the running product $\mathrm{P}_2(n)$ determines $\mathrm{P}_2(n)+1$, whose smallest prime factor becomes the next multiplier; but the $O(\log q)$ bits visible in the residue $\mathrm{P}_2(n) \bmod q$ cannot control the outcome of factoring the $\sim 2^n$-bit integer $\mathrm{P}_2(n) + 1$. This *information bottleneck* is why the multiplier residues behave as if independent—and why the walk on $(\mathbb{Z}/q\mathbb{Z})^\times$ should visit every element, including the "death state" $-1$ that would put $q$ in the sequence. The analogy is tighter than it may appear: in both cases the pseudorandomness claim concerns a fully deterministic process whose forward map is easy but whose outputs resist structural prediction—the difference being that minFac achieves this not by cryptographic design but accidentally, through the information bottleneck of projecting a $\sim 2^n$-bit integer onto $O(\log q)$ bits. Our formalization makes this intuition precise: we identify the exact mathematical content—Conditional Multiplier Equidistribution (CME)—needed to convert "the factoring channel destroys correlation" into a proof of MC, and show it implies the conjecture through a verified chain of reductions.

Our main result is the machine-verified reduction of MC to a single open hypothesis:

**Theorem 1.2** (✓ full_chain_dsl)**.** DSL $\implies$ CME $\implies$ CCSB $\implies$ MC.

The Deterministic Stability Lemma (DSL) is the sole remaining hypothesis. It asserts that *population equidistribution* of least prime factors among shifted squarefree integers—a standard consequence of Alladi's theorem [9] and Dirichlet's theorem on primes in arithmetic progressions—implies *conditional multiplier equidistribution* (CME) for the specific EM orbit. In symbols, DSL = (PE $\Rightarrow$ CME), where PE is the population equidistribution that follows from analytic number theory. The entire mathematical content of this paper is the gap between PE (known) and CME (sufficient for MC): does generic equidistribution transfer to one deterministic orbit?

The strategy proceeds in three stages:

1. **Reformulation.** We recast "does prime $q$ appear?" as "does a multiplicative walk on the cyclic group $(\mathbb{Z}/q\mathbb{Z})^\times$ hit the element $-1$?" This translation is exact (Section 2).
2. **Bootstrap.** We show that the algebraic precondition for the walk to reach $-1$—that the multipliers generate the full group—is *free*, following from the inductive hypothesis that all primes below $p$ have already appeared (Section 3). A single hit on $-1$ past the stage where all smaller primes are excluded suffices for MC.
3. **Reduction to DSL.** We develop the character-analytic infrastructure to show CME $\Rightarrow$ CCSB $\Rightarrow$ MC (Section 4), then an ensemble averaging framework that collapses the full landscape to DSL (Section 5). Section 6 explains why the remaining hypothesis is hard.

The formalization serves two purposes: (i) it guarantees that every reduction is logically sound, and (ii) it precisely delineates the boundary between what is proved and what remains open, preventing the kind of subtle gap that plagues pencil-and-paper reductions involving multiple interacting hypotheses.

The intermediate reductions are:

**Theorem 1.3** (Single Hit Theorem — ✓ single_hit_implies_mc)**.** SingleHitHypothesis $\implies$ MC.

SingleHitHypothesis asks: for every missing prime $q$, if every prime below $q$ already appears in the sequence and the multiplier residues generate the full group $(\mathbb{Z}/q\mathbb{Z})^\times$ (SubgroupEscape, Property 2.14), then $q \mid \mathrm{P}_2(n)+1$ for some $n$ past the stage where all smaller primes are excluded. The proof is by strong induction on $p$: the inductive hypothesis ensures all primes below $p$ have appeared, PrimeResidueEscape (proved elementarily) bootstraps SubgroupEscape, and a single hit gives $\mathrm{em}_2(n+1) = p$.

The algebraic precondition—that the multipliers generate $(\mathbb{Z}/q\mathbb{Z})^\times$—is free; the open problem is purely dynamical. Multiple strategies for producing the required hit are formally verified:

**Theorem 1.4** (✓ dynamical_hitting_implies_mullin)**.** *DynamicalHitting (DH: the walk hits $-1$ cofinally)* $\implies$ MC.

**Theorem 1.5** (✓ complex_csb_mc')**.** *ComplexCharSumBound (CCSB: character sums of the walk are $o(N)$)* $\implies$ MC.

**Theorem 1.6** (✓ cme_implies_mc)**.** CME $\implies$ MC (sharpest sufficient condition).

An independent route bypasses CME entirely: Visit Equidistribution (VE)—the walk visits every residue class with equal frequency—also implies MC through a separate machine-verified chain (sve_implies_mc, cancel_weyl_implies_mc). VE and CME are genuinely different conditions (neither implies the other), but both reach MC.

All reductions are fully machine-verified with zero sorry. The ensemble averaging framework (Section 5) uses generalized EM sequences parametrized by arbitrary squarefree starting points, CRT-based decorrelation, and a first-moment/variance argument to collapse all routes to DSL. The formalization thus provides a precise "roadmap": prove DSL (the sole remaining hypothesis), or equivalently any of DH, CCSB, CME, VE, or the equivalent formulations catalogued in §4, §6.4, and the glossary (Appendix A.7), and the rest follows by machine-checked deduction.

**Organization.** Section 1.1 analyzes the bag-theoretic and information-theoretic structure of the EM dynamics. Section 1.2 describes the human–AI methodology. The technical development begins in Section 2, which reformulates MC as a walk-hitting problem, establishes the algebraic prerequisites, and derives the first missing prime's death channel avoidance. Section 3 presents the inductive bootstrap—the core insight that SubgroupEscape is free—and proves the Single Hit Theorem, reducing MC to producing one hit at each prime. Section 4 develops the character-analytic reduction (CCSB $\Rightarrow$ MC), including the large sieve infrastructure, the spectral energy bridge, and the van der Corput–autocorrelation route. Section 5 develops the ensemble averaging framework, reducing MC to a single Deterministic Stability Lemma (DSL). Section 6 explains *why* the remaining hypothesis is difficult by analyzing dead ends and structural barriers, and identifies the open problems whose resolution would close the conjecture (§6.4). Section 7 describes the Lean formalization and catalogues all verified results (§7.4). Appendix A.1 collects the historical background; Appendix A.2 discusses analogies with Artin's conjecture, multiplicative walks, Sarnak's program, and sieve theory; Appendix A.3 develops the function field analog over $\mathbb{F}_p[t]$, where the Weil bound replaces Wiener–Ikehara and the orbit-specificity barrier is isolated in pure form; Appendix A.4 presents additional sieve and spectral routes to MC; and Appendix A.7 provides a glossary of all definitions and hypotheses.

## 1.1 The Bag-Theoretic Structure of the Euclid–Mullin Dynamics

**The EM sequence as a dynamical system on bags of primes.** The state of the Euclid–Mullin construction at step $n$ is fully captured by the *bag* (finite set) of primes collected so far:

$S_n = \{\mathrm{em}_2(0), \mathrm{em}_2(1), \ldots, \mathrm{em}_2(n)\}$. The dynamics is a deterministic map on finite subsets of primes:

$$S_{n+1} = S_n \cup \{\min \mathcal{F}(S_n)\},$$

where $\mathcal{F}(S) = \mathrm{PrimeFactors}(\prod S + 1)$ produces the *factor bag* of the Euclid number $E_n = \mathrm{P}_2(n) + 1$.

The trajectory is entirely determined by $S_0 = \{2\}$. The Markov property holds: the future depends only on the current bag, not on the order in which its elements were assembled. The product $\mathrm{P}_2(n) = \prod S_n$ is a *lossless encoding* of the bag (by unique factorization of the squarefree integer $\mathrm{P}_2(n)$), and the order of insertion is forgotten.

**The pipeline: from bag to next prime.** The selection of the next prime passes through a pipeline of operations, each with distinct information-theoretic character:

$$S_n \xrightarrow[\text{lossless}]{\prod(\cdot)} \mathrm{P}_2(n) \xrightarrow[+1]{\text{shift}} \mathrm{P}_2(n) + 1 \xrightarrow[\text{factor}]{} \mathcal{F}(S_n) \xrightarrow[\text{compress}]{\min} \mathrm{em}_2(n+1).$$

*Stage 1: Product (lossless).* The map $S_n \mapsto \mathrm{P}_2(n)$ is an injection (on sets of distinct primes), encoding $\sim n \log n$ bits of bag information into a single integer of $\sim 2^n$ digits. This stage *expands* the representation while preserving all information.

*Stage 2: The $+1$ shift (multiplicative $\to$ additive).* The map $\mathrm{P}_2(n) \mapsto \mathrm{P}_2(n)+1$ is the critical bridge between two worlds. The integer $\mathrm{P}_2(n)$ lives in the multiplicative world: its structure (as a product of known primes) is completely understood. The integer $\mathrm{P}_2(n)+1$ lives in the additive world: its factorization bears no algebraic relationship to that of $\mathrm{P}_2(n)$, beyond the guaranteed coprimality $\gcd(\mathrm{P}_2(n), \mathrm{P}_2(n) + 1) = 1$. This shift is the *source of mixing* in the dynamics.

*Stage 3: Factorization (revealing the new bag).* The factorization $\mathrm{P}_2(n) + 1 = p_1^{a_1} \cdots p_k^{a_k}$ reveals the factor bag $\mathcal{F}(S_n) = \{p_1, \ldots, p_k\}$. This step is formally lossless, but computationally opaque: predicting $\mathcal{F}(S_n)$ from $S_n$ requires factoring a number of $\sim 2^n$ digits.

*Stage 4: Minimum (catastrophic compression).* The map $\mathcal{F}(S_n) \mapsto \min \mathcal{F}(S_n)$ discards all but the smallest element of the factor bag. The compression ratio is exponential: the input has $\sim 2^n$ bits; the output has $O(n)$ bits. The composition of stages 2–4 is the *minFac bottleneck*: an information-destroying channel that maps $\sim 2^n$ bits to $O(n)$ bits through arithmetically chaotic operations.

**The orthogonal bag property.** A fundamental structural fact distinguishes the factor bag $\mathcal{F}(S_n)$ from the current bag $S_n$:

**Proposition 1.7** (Orthogonal bags)**.** *$\mathcal{F}(S_n) \cap S_n = \emptyset$. That is, the primes dividing $\mathrm{P}_2(n) + 1$ are entirely disjoint from the primes in the current bag.*

*Proof.* For any $p \in S_n$: $p \mid \mathrm{P}_2(n)$, hence $\mathrm{P}_2(n) + 1 \equiv 1 \pmod{p}$, so $p \nmid \mathrm{P}_2(n) + 1$, i.e. $p \notin \mathcal{F}(S_n)$. □

This is the Euclidean coprimality at the heart of the construction, but its bag-theoretic formulation reveals its dynamical significance: at each step, the factorization produces a *fresh sample* from the complementary set $\mathbb{P} \setminus S_n$. The new bag $\mathcal{F}(S_n)$ contains no "recycled" primes—every element is drawn from the universe of primes not yet seen.

Moreover, $\mathrm{P}_2(n)$ is *squarefree* (a product of distinct primes), so $S_n$ is genuinely an unordered set with no multiplicities. The accumulator $\mathrm{P}_2(n)$ is the unique squarefree integer with prime support exactly $S_n$.

**The CRT perspective.** The Chinese Remainder Theorem provides the natural coordinate system for the bag dynamics. The integer $\mathrm{P}_2(n)$ is determined by its CRT vector:

$$\mathbf{c}(n) = (\mathrm{P}_2(n) \bmod 2,\ \mathrm{P}_2(n) \bmod 3,\ \mathrm{P}_2(n) \bmod 5,\ \ldots)$$

indexed by all primes. For primes $p \in S_n$: $\mathrm{P}_2(n) \bmod p = 0$ (since $p \mid \mathrm{P}_2(n)$). For primes $r \notin S_n$: $\mathrm{P}_2(n) \bmod r = \prod_{p \in S_n} (p \bmod r) \in (\mathbb{Z}/r\mathbb{Z})^\times$.

The $+1$ shift maps $\mathbf{c}(n) \mapsto \mathbf{c}(n) + \mathbf{1}$ componentwise. The factorization of $\mathrm{P}_2(n) + 1$ is determined by which components satisfy $c_r(n) + 1 \equiv 0 \pmod r$, i.e., $c_r(n) = -1$. The minFac is the *winner of a race* across CRT coordinates: the smallest prime $r \notin S_n$ for which $c_r(n) = -1$. This race depends on all coordinates simultaneously, but each coordinate is determined independently (by CRT) from every other.

**Fiber structure and non-reconstructibility.** A natural question is whether the output of minFac carries information about the bag that produced it. The answer is: almost none.

**Proposition 1.8** (Massive many-to-one)**.** *For any prime $q$ and any set size $k$, the number of bags $T$ of $k$ distinct primes satisfying* $\mathrm{minFac}(\prod T + 1) = q$ *grows exponentially in $k$.*

The constraints on such a bag $T$ are purely modular: $\prod T \equiv -1 \pmod q$ (one congruence condition), plus $\prod T \not\equiv -1 \pmod p$ for each prime $p < q$ with $p \notin T$ (at most $\pi(q)$ non-congruence conditions). The total information content of the output is $O(q)$ bits, while the bag carries $\sim 2^k$ bits. The fraction of information preserved is $O(q/2^k) \to 0$ super-exponentially. Consequently, the map $S \mapsto \mathrm{minFac}(\prod S + 1)$ is an *exponentially lossy summarization* of the bag.

**MinFac as a greedy algorithm.** The minimum operation in Stage 4 admits a natural optimization interpretation. Among all prime factors of $\mathrm{P}_2(n) + 1$, the minFac rule selects the one that increases $\log \mathrm{P}_2$ by the least amount:

$$\mathrm{em}_2(n+1) = \arg \min_{p \in \mathcal{F}(S_n)} \log p.$$

This is a *greedy algorithm for slow growth*: at each step, the accumulator grows as slowly as possible (given the constraint of selecting a prime factor of $\mathrm{P}_2(n) + 1$).

Slow growth has a dynamical consequence. Since $\mathrm{P}_2(n)$ grows slowly (relative to the maxFac alternative), each target prime $q$ receives *more trials*—more steps during which $\mathrm{P}_2(n) + 1$ might be divisible by $q$—before the accumulator becomes so large that the probability of $q$-divisibility becomes negligible. The minFac rule maximizes the number of opportunities each prime has to enter the sequence.

By contrast, the maxFac rule (selecting the largest prime factor) causes $\mathrm{P}_2(n)$ to grow so rapidly that small primes quickly lose any chance of being selected, which is why the second Euclid–Mullin sequence provably misses infinitely many primes (Cox–van der Poorten [11], Booker [3]).

**The 0-accessibility of minFac.** We formalize the advantage of minFac over other selection rules. Define a selection rule $\sigma\colon 2^{\mathbb{P}} \to \mathbb{P}$ mapping a nonempty set of primes to one of its elements. Say $\sigma$ is 0-*accessible* for a prime $q$ past the sieve gap if: whenever $q \in F$ and all primes $p < q$ have been screened, $\sigma(F) = q$.

MinFac is 0-accessible for every $q$: past the sieve gap, all primes below $q$ are excluded from $\mathcal{F}(S_n)$, so if $q \in \mathcal{F}(S_n)$, then $q = \min \mathcal{F}(S_n)$. The event "$q$ divides $\mathrm{P}_2(n) + 1$" is *sufficient* for $q$ to enter the sequence.

MaxFac is not 0-accessible: even if $q \mid \mathrm{P}_2(n) + 1$, a larger factor is selected instead, and the probability that $q$ is the largest factor of a number of size $\sim 2^{2^n}$ decays faster than any polynomial.

The 0-accessibility of minFac ensures that the walk mod $q$ hitting $-1$ is both necessary and sufficient for $q$ to enter the sequence (past the sieve gap). This reduces the question of whether $q$ appears to a question about the walk alone, with no additional selection barrier.

**Deterministic pseudorandomness.** The EM sequence is fully deterministic, yet exhibits pseudorandom behavior. The pseudorandomness arises from the composition of two sources of arithmetic opacity:

1. *The* $+1$ *shift* moves from the multiplicative world (where $\mathrm{P}_2(n)$ is fully understood) to the additive world (where $\mathrm{P}_2(n) + 1$ is arithmetically opaque). The relationship between the multiplicative structures of consecutive integers is the central mystery of analytic number theory.
2. *The factoring step* reveals the prime structure of $\mathrm{P}_2(n) + 1$, but this structure is computationally hard to predict from $\mathrm{P}_2(n)$. The computational difficulty of factoring is, in a precise sense, the *source of pseudorandomness* for the EM sequence.

Small changes to the bag (adding one prime $p$) transform $\mathrm{P}_2(n)$ to $\mathrm{P}_2(n) \cdot p$ and hence $\mathrm{P}_2(n) + 1$ to $\mathrm{P}_2(n) \cdot p + 1$, a completely different integer with a completely different factorization. The dynamics is *sensitive to the bag contents*, analogous to sensitive dependence on initial conditions in chaotic systems, but operating through number-theoretic rather than geometric mechanisms.

The orthogonal bag property reinforces this pseudorandomness: at each step, the factor bag is drawn from $\mathbb{P} \setminus S_n$, a set that has never been "used" in the construction. Each step provides a genuinely fresh arithmetic input, preventing the buildup of systematic correlations.

## 1.2 Methodology: Human–AI Collaboration

This work was produced through a sustained collaboration between a human author and an AI system (Claude, Anthropic) across 150+ sessions. The human author directed the mathematical strategy—proof architecture, dead-end identification, and editorial control—while the AI system handled Lean 4 formalization, Mathlib API search, literature scouting, and exploration of candidate proof strategies.

The interaction was organized at scale via an *agent swarm*: a multi-agent system built on the Claude Agent SDK. The swarm comprises seven specialized agents, each with its own system prompt, tool access, and model:

- A *coordinator* that reads the current proof state, selects the most promising action, dispatches specialists, and updates shared state files.
- A *formalizer* that writes and compiles Lean code in rapid iteration cycles.
- A *literature scout* that searches papers and Mathlib for relevant results.
- Four *attack vector specialists* focused on analytic, algebraic, combinatorial, and information-theoretic approaches.
- A *paper writer* that maintains this document (that is nevertheless often revised and maintained by the author).
- A *code stylist* whose goal is to improve the code quality and trying to enforce Mathlib conventions.

Agent prompts are *self-evolving*: after each session the coordinator updates them to record dead ends, new Mathlib discoveries, and shifted priorities. This prevents agents from rediscovering settled territory. All agent state (progress, strategy log, findings) is stored as git-tracked markdown, making the exploration history fully reproducible.

The division of labor between human and AI was sharp:

- **Human:** mathematical direction, proof strategy, identification of dead ends, evaluation of intermediate results, architectural decisions on the reduction hierarchy, and editorial control over the final formalization and paper.
- **AI (Claude):** Lean 4 formalization using Mathlib, Mathlib API search, literature scouting, exploration of candidate proof strategies, and drafting of this paper.

The human author guided the proof effort across 150+ sessions, suggesting attack vectors (algebraic, analytic, combinatorial, sieve-theoretic), identifying when an approach had reached a dead end, and pushing toward the sharpest possible reductions. The AI agents wrote all Lean code, searched Mathlib for relevant lemmas, explored dozens of proof strategies to completion or refutation, and maintained the evolving paper.

The swarm is optimized for formalization and reduction, not mathematical discovery. The next breakthrough, if it comes, will probably be a human insight about the structure of minFac on EM products—not something an agent finds by systematic search.

## 2 The Residue Walk

For any starting point $s \geq 2$, the generalized EM sequence and running product are defined by mutual recursion:

$$\mathrm{P}_s(0) = s, \qquad \mathrm{em}_s(k) = \mathrm{minFac}\big(\mathrm{P}_s(k) + 1\big), \qquad \mathrm{P}_s(k+1) = \mathrm{P}_s(k) \cdot \mathrm{em}_s(k). \tag{2}$$

The standard Euclid–Mullin sequence is the case $s = 2$ (✓ genProd_two_eq_prod). We use subscripted notation throughout: $\mathrm{em}_s$, $\mathrm{P}_s$ denote the sequence and accumulator from starting point $s$.

**Theorem 2.1** (✓ genSeq_prime, ✓ genSeq_injective)**.** *For any $s \geq 2$, every $\mathrm{em}_s(k)$ is prime. For squarefree $s$, the map $k \mapsto \mathrm{em}_s(k)$ is injective: no prime appears twice.*

Further structural properties, all fully proved:

- **Divisibility**: $s \mid \mathrm{P}_s(k)$ for all $k$ (✓ start_dvd_genProd).
- **Strict monotonicity**: $\mathrm{P}_s(k) < \mathrm{P}_s(k{+}1)$ (✓ genProd_strict_mono).
- **Squarefreeness**: for squarefree $s$, $\mathrm{P}_s(k)$ is squarefree for all $k$ (✓ genProd_squarefree).

**Theorem 2.2** (Tail identification — ✓ genProd_restart)**.** *Restarting the EM process from the $M$-th accumulator of orbit $s$ gives the tail of that orbit:*

$$\mathrm{P}_{\mathrm{P}_s(M)}(k) \;=\; \mathrm{P}_s(M+k), \qquad \mathrm{em}_{\mathrm{P}_s(M)}(k) \;=\; \mathrm{em}_s(M+k).$$

*Proof.* By induction on $k$. The base case $k = 0$ is immediate from the definition $\mathrm{P}_n(0) = n$. For the step, $\mathrm{P}_{\mathrm{P}_s(M)}(k{+}1) = \mathrm{P}_{\mathrm{P}_s(M)}(k) \cdot \mathrm{minFac}(\mathrm{P}_{\mathrm{P}_s(M)}(k) + 1)$; the inductive hypothesis replaces both occurrences by $\mathrm{P}_s(M{+}k)$, giving $\mathrm{P}_s(M{+}k) \cdot \mathrm{minFac}(\mathrm{P}_s(M{+}k) + 1) = \mathrm{P}_s(M{+}k{+}1)$. The sequence identity follows by definition. □

The tail identification says that the family of generalized EM orbits is closed under "time-shifting": the orbit starting from any intermediate accumulator is not a new object but a suffix of the original orbit.

**Definition 2.3** (Walk and Multiplier)**.** For any prime $q$, the **residue walk** $\mathrm{P}_{s,q}(\cdot)$ and the **multiplier** $\mathrm{m}_{s,q}(\cdot)$ project the accumulator and the next prime onto $\mathbb{Z}/q\mathbb{Z}$:

$$\mathrm{P}_{s,q}(n) \coloneqq \mathrm{P}_s(n) \bmod q,$$
$$\mathrm{m}_{s,q}(n) \coloneqq \mathrm{em}_s(n{+}1) \bmod q.$$

The first subscript is the starting point; the second is the modulus.

**Proposition 2.4** (Walk recurrence — ✓ walkZ_succ, ✓ genWalkZ_succ)**.** $\mathrm{P}_{s,q}(n{+}1) = \mathrm{P}_{s,q}(n) \cdot \mathrm{m}_{s,q}(n)$ *in* $\mathbb{Z}/q\mathbb{Z}$*, for any starting point* $s$*.*

**Theorem 2.5** (Walk–Divisibility Bridge — ✓ genWalkZ_eq_neg_one_iff)**.** *For any starting point* $s$ *and prime* $q$*:*

$$\mathrm{P}_{s,q}(k) = -1 \quad \Longleftrightarrow \quad q \mid \mathrm{P}_s(k) + 1.$$

The walk can be in one of two regimes:

1. **Living regime.** If $q \nmid s$ and $q$ has not yet appeared in $\mathrm{em}_s(0), \ldots, \mathrm{em}_s(n{-}1)$, then $q \nmid \mathrm{P}_s(n)$ (since $\mathrm{P}_s(n) = s \cdot \mathrm{em}_s(0) \cdots \mathrm{em}_s(n{-}1)$ and $q$ divides none of these factors). So $\mathrm{P}_{s,q}(n) \in (\mathbb{Z}/q\mathbb{Z})^\times$—the walk lives in the group of units.
2. **Dead regime.** If $q = \mathrm{em}_s(k)$ for some $k$, then $q \mid \mathrm{P}_s(m)$ for all $m > k$, so $\mathrm{P}_{s,q}(m) = 0$ forever. The walk has *collapsed to zero* (✓ walkZ_capture_then_collapse, proved for $s = 2$).

The transition from living to dead can happen only through $-1$ (Theorem 2.5).

Hitting $-1$ is a *necessary* condition for the walk to die (for $q$ to enter the sequence): if $q \mid \mathrm{P}_s(n) + 1$, then $\mathrm{P}_{s,q}(n) = -1$. But it is not sufficient by itself. When $\mathrm{P}_{s,q}(n) = -1$, the walk dies only if $q = \mathrm{minFac}(\mathrm{P}_s(n) + 1)$, i.e. no smaller prime divides $\mathrm{P}_s(n) + 1$. If a smaller prime $p$ also divides $\mathrm{P}_s(n) + 1$, then $\mathrm{minFac}(\mathrm{P}_s(n) + 1) \le p < q$ and $q$ is *not* selected—the walk *bounces off* $-1$ and continues living. The walk may therefore hit $-1$ multiple times without dying. Death occurs only at a hit where $q$ is the smallest available factor:

$$\cdots \to \underbrace{\mathrm{P}_{s,q}(n) = -1}_{\text{bounce}} \to (\mathbb{Z}/q\mathbb{Z})^\times \to \cdots \to \underbrace{\mathrm{P}_{s,q}(n_0) = -1}_{\substack{\text{lethal hit:}\\ q=\mathrm{minFac}}} \to \underbrace{\mathrm{P}_{s,q}(n_0{+}1) = 0}_{\text{dead}} \to 0 \to \cdots$$

What determines whether a hit on $-1$ is a bounce or a lethal hit? The answer depends on which other primes divide $\mathrm{P}_s(n) + 1$. We now specialize to the standard orbit $s = 2$, where the *sieve gap* provides the answer.

**Definition 2.6** (MC($<q$))**.** For a prime $q$, write $\mathrm{MC}(<q)$ for the statement that every prime smaller than $q$ appears in the EM sequence: $\forall\, p < q,\ p \text{ prime} \ \Rightarrow\ \exists\, k,\ \mathrm{em}_2(k) = p$.

When $\mathrm{MC}(<q)$ holds, every prime $p < q$ has entered the sequence at some stage $k_p$, so $p \mid \mathrm{P}_2(n)$ for all $n \ge k_p$. Past a uniform stage $N_0 = \max_p k_p$, every prime $p < q$ divides $\mathrm{P}_2(n)$, and therefore cannot divide $\mathrm{P}_2(n) + 1$ (since $\gcd(\mathrm{P}_2(n), \mathrm{P}_2(n) + 1) = 1$). This is the **sieve gap**: past $N_0$, the only primes that can divide $\mathrm{P}_2(n) + 1$ are $\ge q$.

**Theorem 2.7** ($q$-roughness — ✓ mcBelow_implies_seq_ge)**.** *If* $\mathrm{MC}(<q)$ *holds, then* $\exists\, N_0$ *such that* $\mathrm{em}_2(n{+}1) \ge q$ *for all* $n \ge N_0$*.*

The sieve gap transforms hitting $-1$ from a necessary condition into a sufficient one:

**Theorem 2.8** (Lethal hit — ✓ mcBelow_hit_is_lethal)**.** *If* $\mathrm{MC}(<q)$ *holds and* $\mathrm{P}_{2,q}(n) = -1$ *for some* $n$ *past the sieve gap, then* $\mathrm{em}_2(n{+}1) = q$*.*

*Proof.* Since $n$ is past the sieve gap, no prime $< q$ divides $\mathrm{P}_2(n) + 1$ (Theorem 2.7). But $\mathrm{P}_{2,q}(n) = -1$ gives $q \mid \mathrm{P}_2(n) + 1$, so $q = \mathrm{minFac}(\mathrm{P}_2(n) + 1)$, and $\mathrm{em}_2(n{+}1) = q$. □

**Definition 2.9** (Missing prime)**.** A prime $q$ is **missing** if $\mathrm{em}_2(n) \ne q$ for all $n$.

Mullin's Conjecture asserts that no prime is missing. Under $\mathrm{MC}(<q)$, the first hit on $-1$ past the sieve gap is lethal. This immediately constrains missing primes:

**Theorem 2.10** (✓ mcBelow_missing_walk_ne_neg_one)**.** *If* $\mathrm{MC}(<q)$ *holds and* $q$ *is missing, then the walk* never *hits* $-1$ *past the sieve gap:* $\exists\, N_0$ *such that* $\mathrm{P}_{2,q}(n) \ne -1$ *for all* $n \ge N_0$*.*

*Proof.* Any hit past the sieve gap would give $\mathrm{em}_2(n{+}1) = q$ (Theorem 2.8), contradicting $q$ missing. □

For the first missing prime $q$, the hypothesis $\mathrm{MC}(<q)$ holds by definition. So its walk avoids $-1$ permanently past the sieve gap, the walk $\mathrm{P}_{2,q}(\cdot)$ is infinite: it stays in $(\mathbb{Z}/q\mathbb{Z})^\times$ forever, never collapsing to zero.

## 2.1 The forbidden multiplier and the death channel

The following algebraic observations hold for every starting point $s$. Suppose the walk is at position $c \in (\mathbb{Z}/q\mathbb{Z})^\times$ at step $n$. The walk would hit $-1$ at step $n{+}1$ if and only if

$$\mathrm{P}_{s,q}(n) \cdot \mathrm{m}_{s,q}(n) = -1, \quad \text{i.e.,} \quad \mathrm{m}_{s,q}(n) = -c^{-1}.$$

So at every step, there is exactly **one forbidden multiplier** $f(n) = -\mathrm{P}_{s,q}(n)^{-1}$—the unique residue class that would send the walk to $-1$. This is 1 element out of $q{-}1$ possible unit residues.

**Definition 2.11** (Death channel)**.** The **death channel** at position $c$ is the residue class $b(c) = -c^{-1} \bmod q$.

When the walk is at $c$, the death channel is the set of primes $p \equiv -c^{-1} \pmod{q}$, which by Dirichlet's theorem has density $1/(q-1)$ among all primes. The death channel *moves* with the walk: as $c$ changes from step to step, the forbidden class changes with it. The map $c \mapsto -c^{-1}$ is a bijection on $(\mathbb{Z}/q\mathbb{Z})^\times$ (it is the composition of inversion and negation).

**Theorem 2.12** (✓ walk_hits_neg_one_iff_mult_eq_forbidden)**.** *For any starting point $s$ and step $n$ with $\mathrm{P}_{s,q}(n) \in (\mathbb{Z}/q\mathbb{Z})^\times$:*

$$\mathrm{P}_{s,q}(n{+}1) = -1 \quad \Longleftrightarrow \quad \mathrm{m}_{s,q}(n) = -\mathrm{P}_{s,q}(n)^{-1}.$$

In any orbit where $q$ never appears, the multiplier avoids the death channel at every step, forever. This brings us to discuss multipliers.

## 2.2 The Confinement Theorem and SubgroupEscape

Before asking whether the walk hits $-1$, we must ask whether it *can*. The walk is multiplicative: $\mathrm{P}_{s,q}(n) = \mathrm{P}_{s,q}(0) \cdot \prod_{k<n} \mathrm{m}_{s,q}(k)$. The reachable set is the coset $\mathrm{P}_{s,q}(0) \cdot \langle \text{multipliers} \rangle$.

**Theorem 2.13** (Confinement — ✓ confinement_forward)**.** *For any starting point $s$: if every multiplier lies in a subgroup $H \leq (\mathbb{Z}/q\mathbb{Z})^\times$, then the walk is confined to the coset $\mathrm{P}_{s,q}(0) \cdot H$. In particular, if $-1 \notin \mathrm{P}_{s,q}(0) \cdot H$, the walk* never *hits $-1$.*

This motivates:

**Property 2.14** (SubgroupEscape (**SE**))**.** For a starting point $s$ and prime $q$: no proper subgroup $H < (\mathbb{Z}/q\mathbb{Z})^\times$ contains all multipliers. Equivalently, $\langle \mathrm{m}_{s,q}(n) : n \in \mathbb{N} \rangle = (\mathbb{Z}/q\mathbb{Z})^\times$.

**Theorem 2.15** (✓ se_of_maximal_escape)**.** *SE holds iff multipliers escape every* maximal *proper subgroup. Since $(\mathbb{Z}/q\mathbb{Z})^\times$ is cyclic, the maximal subgroups are the index-$\ell$ subgroups for prime $\ell \mid q{-}1$.*

When SE holds, the walk is not confined to any proper coset: every element of $(\mathbb{Z}/q\mathbb{Z})^\times$, including $-1$, is *reachable*. But reachability does not imply hitting—that is a dynamical question.

### 2.3 The first missing prime

We now assemble the key argument. Suppose, toward contradiction, that Mullin's Conjecture is false. Then there exists a **first missing prime**: the smallest prime $q$ that never appears in the EM sequence. For this $q$:

(a) $\mathrm{MC}(<q)$ holds—by definition, every prime smaller than $q$ is in the sequence.
(b) The walk $\mathrm{P}_{2,q}(\cdot)$ is infinite—since $q$ is missing, $\mathrm{P}_{2,q}(n) \in (\mathbb{Z}/q\mathbb{Z})^\times$ for all $n$.
(c) Past the sieve gap, the walk never hits $-1$. Here is why. Eventually (say for $n \geq N_0$), all primes $< q$ have entered the sequence and divide $\mathrm{P}_2(n)$. For $n \geq N_0$, no prime $< q$ can divide $\mathrm{P}_2(n)+1$ (since it divides $\mathrm{P}_2(n)$ and $\gcd(\mathrm{P}_2(n), \mathrm{P}_2(n)+1) = 1$). So if $\mathrm{P}_{2,q}(n) = -1$ for some $n \geq N_0$, then $q \mid \mathrm{P}_2(n) + 1$, and $q$ is the smallest prime factor of $\mathrm{P}_2(n) + 1$ (all smaller primes are excluded). Then $\mathrm{em}_2(n+1) = q$, contradicting $q$ being missing.

Therefore: **for the first missing prime $q$, the walk is an infinite trajectory on $(\mathbb{Z}/q\mathbb{Z})^\times$ that avoids the death channel at every step past the sieve gap.** Equivalently: $\mathrm{m}_{2,q}(n) \neq -\mathrm{P}_{2,q}(n)^{-1}$ for all $n \geq N_0$.

## 3 The Inductive Bootstrap

With the first missing prime's situation established (§2), we now show that the algebraic precondition—SubgroupEscape—comes for free, and that a single hit on $-1$ past the sieve gap suffices for MC.

The walk avoids $-1$ forever. Can it at least *reach* $-1$? That is: does SE hold?

**Theorem 3.1** (PrimeResidueEscape (**PRE**); ✓ prime_residue_escape)**.** *For every prime $p \geq 5$ and every proper subgroup $H < (\mathbb{Z}/p\mathbb{Z})^\times$, some odd prime $r < p$ has residue $r \bmod p \notin H$.*

*Proof.* Suppose every odd prime $r \in [3, p)$ satisfies $r \bmod p \in H$. Since $H$ is a subgroup, every *product* of such primes is in $H$. Every odd number in $[1, p)$ factors into odd primes $< p$, so every odd number in $[1, p)$ maps into $H$. In particular, $p - 2 \equiv -2$ and $p - 4 \equiv -4$ are both in $H$ (both odd and $< p$ for $p \geq 5$). Then $2 = (-4)(-2)^{-1} \in H$, so every even number in $[1, p)$ is in $H$ as well. Hence $H = (\mathbb{Z}/p\mathbb{Z})^\times$, contradicting $H$ proper. □

**Theorem 3.2** (✓ mcBelow_pre_implies_se)**.** $\mathrm{MC}(<p) + \mathrm{PRE} \implies \mathrm{SE}(p)$.

*Proof sketch.* Let $H < (\mathbb{Z}/p\mathbb{Z})^\times$ be proper. By PRE, some odd prime $r < p$ has $r \bmod p \notin H$. By $\mathrm{MC}(<p)$, the prime $r$ appears as $\mathrm{em}_2(k)$ for some $k$. Then $\mathrm{m}_{2,p}(k-1) \equiv r \pmod p \notin H$. □

**Corollary 3.3.** *For the first missing prime $q$: the multipliers generate all of $(\mathbb{Z}/q\mathbb{Z})^\times$. SubgroupEscape holds, and $-1$ is reachable.*

The one-prime gap (Theorem 3.14) shows that $\mathrm{MC}(<q)$ plus a single divisibility event $q \mid \mathrm{P}_2(n) + 1$ past the sieve gap gives $\mathrm{MC}(q)$. The bootstrap (Theorem 3.2) shows that $\mathrm{MC}(<q)$ gives $\mathrm{SE}(q)$ for free. These two facts compose into the primary reduction of Mullin's Conjecture.

**Property 3.4** (SingleHitHypothesis (**SHH**))**.** For every prime $q$: if $\mathrm{MC}(<q)$ and $\mathrm{SE}(q)$ hold and $q$ is missing, then there exists $n$ past the sieve gap with $q \mid \mathrm{P}_2(n) + 1$.

Equivalently: for every prime $q$, if $\mathrm{MC}(<q)$ and $\mathrm{SE}(q)$ hold, then either $q$ already appears in the sequence, or there exists $n \geq N_0(q)$ with $\mathrm{P}_{2,q}(n) = -1$.

**Theorem 3.5** (Single Hit Theorem — ✓ single_hit_implies_mc)**.** SingleHitHypothesis $\implies$ MC.

*Proof.* By strong induction on $p$. Assume $\mathrm{MC}(<p)$.

1. **Bootstrap gives SE.** $\mathrm{MC}(<p) + \mathrm{PRE} \Rightarrow \mathrm{SE}(p)$ (Theorem 3.2). Since PRE is proved unconditionally (Theorem 3.1), we obtain $\mathrm{SE}(p)$.
2. **SHH gives a hit.** Since $\mathrm{MC}(<p)$ and $\mathrm{SE}(p)$ hold, SHH provides $n \geq N_0$ (past the sieve gap) with $p \mid \mathrm{P}_2(n) + 1$.
3. **The sieve gap closes.** Past $N_0$, all primes $< p$ divide $\mathrm{P}_2(n)$ and hence cannot divide $\mathrm{P}_2(n) + 1$. So $p = \mathrm{minFac}(\mathrm{P}_2(n) + 1)$, giving $\mathrm{em}_2(n{+}1) = p$.

□

### 3.1 The death channel avoidance paradox

We now have a precise and sharp picture of the first missing prime $q$:

1. The walk lives in $(\mathbb{Z}/q\mathbb{Z})^\times$ forever.
2. The multipliers generate the full group—$-1$ is reachable.
3. The walk never reaches $-1$—the death channel is avoided at every step past the sieve gap.
4. At each step, the death channel is a single residue class out of $q-1$—a "target" of density $1/(q-1)$.

Mullin's Conjecture is therefore equivalent to: **this situation is impossible.** The open problem is now:

*Does the multiplicative walk on $(\mathbb{Z}/q\mathbb{Z})^\times$ defined by the EM sequence, whose multipliers generate the full group, hit $-1$ at least once past the sieve gap?*

"At least once past the sieve gap" is the precise requirement. Not cofinally, not equidistributed—once. The intuition for impossibility rests on an information-theoretic asymmetry. At step $n$, the death channel $f(n) = -\mathrm{P}_{2,q}(n)^{-1}$ is determined by the walk position $\mathrm{P}_{2,q}(n) = \mathrm{P}_2(n) \bmod q$, which carries $O(\log q)$ bits of information. The multiplier $\mathrm{m}_{2,q}(n) = \mathrm{minFac}(\mathrm{P}_2(n)+1) \bmod q$ is determined by the full integer $\mathrm{P}_2(n) + 1$, which has $\sim 2^n$ bits. The factoring operation minFac extracts global arithmetic information from all $\sim 2^n$ bits; the death channel is determined by $O(\log q)$ bits. For the multiplier to systematically avoid the death channel, the $O(\log q)$-bit residue would have to predict the outcome of an operation on a $2^n$-bit integer—a "prediction" whose information content vanishes exponentially.

More precisely: for a generic $q$-rough integer $N \equiv a \pmod q$, the conditional distribution of $\mathrm{minFac}(N) \bmod q$ is asymptotically uniform over $(\mathbb{Z}/q\mathbb{Z})^\times$, by CRT. Knowing $N \bmod q$ does not constrain $N \bmod p$ for any other prime $p$, so it does not constrain which primes $\leq N^{1/2}$ divide $N$. The density of the death channel among all primes is $1/(q-1)$, and the conditional probability that $\mathrm{minFac}(N)$ falls in the death channel is $1/(q{-}1){+}o(1)$ as $N \to \infty$, *independently of the residue class $a$.*

For the EM sequence, $\mathrm{P}_2(n) + 1$ grows super-exponentially ($\mathrm{P}_2(n) + 1 \geq 2^{2^n}$), so the $o(1)$ error at each step shrinks exponentially fast. The "probability" of avoiding the death channel for $N$ consecutive steps is heuristically $(1 - 1/(q-1))^N \to 0$. Converting this heuristic into a proof is the content of the conjecture.

### 3.2 Sufficient conditions for the single hit

Several formally verified strategies produce the required single hit past the sieve gap. Each implies MC via the Single Hit Theorem.

**Property 3.6** (DynamicalHitting (**DH**))**.** For every missing prime $q$: $\mathrm{SE}(q) \Rightarrow \mathrm{HH}(q)$, where $\mathrm{HH}(q)$ (HittingHypothesis) asks for cofinal hitting: $\forall N,\ \exists n \geq N,\ q \mid (\mathrm{P}_2(n) + 1)$.

**Theorem 3.7** (✓ dynamical_hitting_implies_mullin)**.** DH $\implies$ MC.

DH is stronger than SHH: it does not assume MC($<q$) and asks for infinitely many hits rather than one. But the extra strength is convenient—DH interfaces cleanly with character sum methods. In the death channel language, DH asserts: if the multipliers generate $(\mathbb{Z}/q\mathbb{Z})^\times$, then the multiplier cannot avoid the forbidden residue $-\mathrm{P}_{2,q}(n)^{-1}$ forever. Equivalently: there is no infinite walk on a cyclic group, with a generating set of multipliers, that dodges a single moving target of density $1/(q-1)$ at every step.

The key structural point: SHH is **strictly weaker** than DynamicalHitting in two ways. First, SHH assumes MC($<q$), which DH does not (DH only assumes SE). Second, SHH asks for one hit past the sieve gap, while DH asks for cofinal hitting. Both extra assumptions are harmless in the inductive proof—MC($<q$) is always available at the inductive step, and one hit is all the Single Hit Theorem needs—but they make SHH genuinely easier to satisfy as a mathematical statement.

*Remark* 3.8. The logical relationships among the hitting hypotheses are:

$$\mathrm{HH} \implies \mathrm{DH} \implies \mathrm{SHH},$$

where HH on its own denotes the *unconditional* version of HH($q$) from Definition 3.6: cofinal hitting asserted for every missing $q$ without assuming SE($q$). DH conditions cofinal hitting on SE, and SHH asks for a single hit past the sieve gap given both MC($<q$) and SE. All three imply MC. SHH is the weakest: it assumes the most (MC($<q$) and SE, both provided free by the inductive bootstrap) and demands the least (one hit, not infinitely many). The converses need not hold.

**Property 3.9** (ComplexCharSumBound (**CCSB**))**.** For every missing prime $q$ and every non-trivial character $\chi$: $\|S_\chi(N)\| = o(N)$, where $S_\chi(N) = \sum_{n<N} \chi(\mathrm{P}_{2,q}(n))$.

**Theorem 3.10** (✓ complex_csb_mc')**.** CCSB $\implies$ MC.

CCSB produces the hit via Fourier inversion: if all non-trivial character sums are $o(N)$, the hit count at $-1$ is $N/(q-1) + o(N)$, which is eventually positive. One hit past the sieve gap is lethal (Section 4).

**Property 3.11** (ConditionalMultiplierEquidist (**CME**))**.** For every missing prime $q$, every non-trivial $\chi$, and every walk position $c$: the multiplier characters $\chi(\mathrm{m}_{2,q}(n))$ conditioned on $\mathrm{P}_{2,q}(n) = c$ are equidistributed (their partial sums are $o(N)$).

**Theorem 3.12** (✓ cme_implies_mc)**.** CME $\implies$ MC (sharpest sufficient condition).

CME is the sharpest hypothesis: it asserts that the factoring operation destroys correlation between consecutive multiplier residues conditioned on the walk position. It implies CCSB for all character orders, bypassing the $d \geq 3$ barrier that blocks the BRE route.

**Theorem 3.13** (✓ vcb_ped_implies_mc)**.** VCB + PED $\implies$ MC.

VCB (Vanishing Conditional Bias) is a weakening of CME that permits fiber sums to be proportional to visit counts rather than small; combined with PED (Positive Escape Density), it reaches CCSB.

Each of these strategies produces at least one hit past the sieve gap, which the Single Hit Theorem (Theorem 3.5) converts into MC.

**Why it's hard: the walk controls nothing** The difficulty is entirely in the coupling between walk position and multiplier. At step $n$:

- The **walk position** $\mathrm{P}_{2,q}(n) = \mathrm{P}_2(n) \bmod q$ determines the death channel $f(n) = -\mathrm{P}_{2,q}(n)^{-1}$.
- The **multiplier** $\mathrm{m}_{2,q}(n) = \mathrm{minFac}(\mathrm{P}_2(n) + 1) \bmod q$ is what must fall into the death channel.
- Both depend on $\mathrm{P}_2(n)$: the walk position depends on $\mathrm{P}_2(n) \bmod q$, and the multiplier depends on $\mathrm{P}_2(n) + 1$ as a full integer.

The walk position sees $O(\log q)$ bits; the multiplier sees all $\sim 2^n$ bits. But they share the same underlying object $\mathrm{P}_2(n)$. The question is whether this shared dependence creates a correlation strong enough for the multiplier to systematically avoid one residue class out of $q-1$.

For a *random* sequence of multipliers drawn uniformly from $(\mathbb{Z}/q\mathbb{Z})^\times$, the probability of avoiding the death channel for $N$ steps is $(1-1/(q-1))^N \to 0$. The EM walk is not random—it is deterministic—but the factoring operation that determines each multiplier is, heuristically, a decorrelating "hash." This is the **factorization independence heuristic**: the function minFac, applied to a $2^n$-bit integer, produces an output that is effectively uncorrelated with the $O(\log q)$-bit residue class of the input.

Every open hypothesis in this paper—DH, CCSB, CME—is a precise formalization of this heuristic.

## 3.3 Supporting Infrastructure

The remainder of this section collects the supporting results that flesh out the bootstrap: the one-prime gap, the sieve gap, and the power residue decomposition.

**The Sieve Gap and the One-Prime Gap** The $q$-roughness theorem (Theorem 2.7) resolves the selectability problem described in Section 1: past the sieve gap, $q$ is the smallest available factor whenever it divides the Euclid number. This gives the one-prime gap:

**Theorem 3.14** (One-prime gap — ✓ mcBelow_cofinal_hit_implies_mc_at)**.** $\mathrm{MC}(<q)$ *plus a single hitting event* $q \mid \mathrm{P}_2(n)+1$ *for some* $n$ *past the sieve gap implies* $\mathrm{MC}(q)$.

**The Power Residue Decomposition** Since $(\mathbb{Z}/q\mathbb{Z})^\times$ is cyclic of order $q-1$, its subgroup lattice is determined by the prime factorization of $q-1$. A multiplier set generates the full group if and only if it escapes every maximal subgroup—and the maximal subgroups correspond to the prime divisors $\ell$ of $q-1$. This decomposition converts SE into independent conditions, one per prime $\ell \mid q-1$.

**Property 3.15** (PowerResidueEscape (**PRE**$_\ell$))**.** $\exists\, n : \mathrm{m}_{2,q}(n)^{(q-1)/\ell} \neq 1$ in $(\mathbb{Z}/q\mathbb{Z})^\times$.

**Theorem 3.16** (**PRE** $\Leftrightarrow$ **SE** — ✓ pre_iff_se)**.** PRE $\iff$ SE. *The forward direction uses only Lagrange's theorem; the reverse uses cyclicity of* $(\mathbb{Z}/q\mathbb{Z})^\times$.

**Quadratic Reciprocity Obstruction** The power residue decomposition raises a natural question: for how many primes $q$ could SE actually *fail*? Since each PRE$_\ell$ condition asks only that *one* multiplier among infinitely many escapes the $\ell$-th power subgroup, SE failure requires all multipliers to be $\ell$-th power residues for some $\ell \mid q-1$. By CRT and quadratic reciprocity, the density of primes $q$ for which the first $k$ multiplier primes all fail to escape the index-2 subgroup is at most $O(2^{-k})$. Extending this to a rigorous density-zero statement for SE failure would require controlling all prime divisors $\ell \mid q-1$ simultaneously, which remains open.

# 4 The Character Sum Reduction

Sections 2–3 established the picture: for the first missing prime $q$, the walk lives in $(\mathbb{Z}/q\mathbb{Z})^\times$ forever, the multipliers generate the full group, yet the walk avoids $-1$ permanently past the sieve gap. The death channel $f(n) = -\mathrm{P}_{2,q}(n)^{-1}$ is dodged at every step. The Single Hit Theorem (Theorem 3.5) reduces MC to producing one hit on $-1$ past the sieve gap at each prime.

The question is not "does the walk equidistribute?"—that is far stronger than needed. The question is: *can the walk really avoid one class out of $q-1$ forever?* This section develops the harmonic-analytic tools to show it cannot: character sums detect the anomaly that permanent avoidance would create, and bounding them rules it out.

**Why character sums?** Permanent avoidance of $-1$ means the hit count $|\{n < N : \mathrm{P}_{2,q}(n) = -1\}|$ stays at zero past the sieve gap. Character orthogonality decomposes this count into a uniform share $N/(q-1)$ plus correction terms built from non-trivial character sums $S_\chi(N) = \sum_{n<N} \chi(\mathrm{P}_{2,q}(n))$. The uniform share grows linearly; for the hit count to remain zero, the correction terms must cancel this growth. That requires at least one non-trivial character sum to be $\Omega(N/(q-1))$—a sustained asymmetry in the character spectrum. The hypothesis CCSB (all $|S_\chi(N)| = o(N)$) rules this out: it forces the hit count to be eventually positive, contradicting permanent avoidance.

**What is new vs. what is infrastructure.** The CCSB $\Rightarrow$ MC reduction (Definition 4.2), the Fourier bridge (Theorem 4.3), the Decorrelation–PED chain (§4.3), and the telescoping no-go results (§4.5) are original contributions of this formalization. The large sieve infrastructure (§4.5, Appendix A.4)—including the weak ALS, Gauss sum inversion, van der Corput, and Parseval—formalizes known results; its purpose is to identify the precise *transfer gap* between classical tools and the EM orbit, which is itself a contribution (see §4.5).

The formalization develops this Fourier-analytic reduction because character sums provide the cleanest interface between the death-channel avoidance problem and the toolkit of analytic number theory: the Bombieri–Vinogradov theorem, the large sieve inequality, and Gauss sum inversion all produce character sum bounds, and the formalization shows exactly how each connects to ruling out permanent avoidance.

## 4.1 Character Sums and Permanent Avoidance

For a Dirichlet character $\chi : (\mathbb{Z}/q\mathbb{Z})^\times \to \mathbb{C}^\times$, the *walk character sum* is

$$S_\chi(N) \;=\; \sum_{n<N} \chi\big(\mathrm{P}_{2,q}(n)\big).$$

**Property 4.1** (ComplexCharSumBound (**CCSB**))**.** For every missing prime $q$, every non-trivial character $\chi$, and every $\varepsilon > 0$, there exists $N_0$ such that for all $N \geq N_0$:

$$\|S_\chi(N)\| \;\leq\; \varepsilon \cdot N.$$

In other words, the walk character sums are $o(N)$—they grow strictly slower than linearly. The contrapositive: if the walk permanently avoids $-1$, some non-trivial character sum must be $\Omega(N)$ (to cancel the uniform share in the Fourier bridge). CCSB rules this out.

**Theorem 4.2** (✓ complex_csb_mc')**.** CCSB $\implies$ MC.

This is a single-hypothesis reduction with no additional parameters. The proof composes three bridges:

1. **Fourier inversion** (✓ complex_csb_implies_hit_count_lb_proved): CCSB implies that the hit count at $-1$ satisfies $|\{n < N : \mathrm{P}_{2,q}(n) = -1\}| = N/(q-1) + o(N)$, which is eventually positive. This directly contradicts permanent avoidance past the sieve gap (the character orthogonality formula, Theorem 4.3, gives this for any target $t$; specializing to $t = -1$ is what matters).
2. **Cofinal hitting gives HH** (✓ walk_equidist_mc): the eventually-positive hit count at $-1$ gives cofinal hitting, hence HH. (In fact, the Fourier bridge yields equidistribution across all classes, but only the $t = -1$ case is needed. SE is a side effect: a walk visiting $-1$ cannot be confined to a proper coset.)
3. **DH implies MC** (Theorem 3.7): via the inductive bootstrap.

## 4.2 The Fourier Bridge

The Fourier bridge is the single most important proved result after DH $\Rightarrow$ MC itself: it converts character sum bounds into hit count lower bounds, and hence into MC.

**Theorem 4.3** (✓ walk_hit_count_fourier_step)**.** *For any target $t \in (\mathbb{Z}/q\mathbb{Z})^\times$:*

$$\big|\{n < N : \mathrm{P}_{2,q}(n) = t\}\big| \;=\; \frac{1}{q-1}\sum_{\chi} \overline{\chi(t)}\, S_\chi(N),$$

*where the sum is over all Dirichlet characters mod $q$.*

This is a standard Fourier inversion formula on the finite group $(\mathbb{Z}/q\mathbb{Z})^\times$, stated for all $t$. Specializing to $t = -1$ and splitting the trivial character $\chi_0$ (with $\chi_0(a) = 1$ for all $a$) from the non-trivial ones:

$$\big|\{n < N : \mathrm{P}_{2,q}(n) = -1\}\big| \;=\; \underbrace{\frac{N}{q-1}}_{\text{uniform share}} \;+\; \underbrace{\frac{1}{q-1}\sum_{\chi\neq\chi_0} \overline{\chi(-1)}\, S_\chi(N)}_{\text{correction}}.$$

The first term grows linearly. The correction term is bounded by $\frac{1}{q-1}\sum_{\chi\neq\chi_0} |S_\chi(N)|$, since $|\overline{\chi(-1)}| = 1$. If CCSB holds—all $|S_\chi(N)| = o(N)$—the correction is $o(N)$, and the hit count is $N/(q-1) + o(N)$, which is eventually positive.

**The contrapositive.** Section 3 showed that for the first missing prime $q$, the hit count at $-1$ is exactly 0 past the sieve gap. By the Fourier bridge, this forces the correction terms to cancel the entire main term $N/(q-1)$. Since there are only $q-2$ non-trivial characters, at least one must satisfy $|S_\chi(N)| = \Omega(N/(q-1)^2)$—a sustained linear-scale bias in the character spectrum. CCSB ($= o(N)$) rules this out. The Fourier bridge thus converts the geometric statement "the walk avoids $-1$ permanently" into the spectral statement "some character sum has sustained bias," and CCSB negates the latter.

Returning to our running example ($q = 41$): the walk must accumulate a deficit of $\sim N/40$ hits at $-1$ compared to uniform, which requires sustained character sum bias across the 39 non-trivial characters. Proving CCSB for $q = 41$ would rule out this bias and establish that 41 eventually appears.

## 4.3 The Decorrelation–PED–CCSB Chain

CCSB rules out permanent avoidance of $-1$. But the walk is built from *multipliers*: $\mathrm{P}_{2,q}(n+1) = \mathrm{P}_{2,q}(n) \cdot \mathrm{m}_{2,q}(n)$. Since $\chi$ is a group homomorphism, $\chi(\mathrm{P}_{2,q}(n)) = \chi(\mathrm{P}_{2,q}(0)) \cdot \prod_{k<n} \chi(\mathrm{m}_{2,q}(k))$: the walk character sum is a sum of *partial products* of the multiplier characters. The question becomes: what properties of the multiplier sequence would prevent the walk from permanently dodging the death channel?

This subsection formalizes a chain of progressively weaker hypotheses about the multipliers, each implying the next via proved bridges. The goal is to decompose CCSB into sharper conditions on the multiplier sequence, and to identify exactly where the irreducible difficulty lies.

**Property 4.4** (PositiveEscapeDensity (**PED**))**.** For every missing prime $q$ and non-trivial $\chi$, there exist $\delta > 0$ and $N_0$ such that for $N \geq N_0$: $|\{k < N : \chi(\mathrm{m}_{2,q}(k)) \neq 1\}| \geq \delta N$.

The name "escape" comes from the SubgroupEscape perspective: the kernel $\ker(\chi)$ is a proper subgroup of $(\mathbb{Z}/q\mathbb{Z})^\times$, and $\chi(\mathrm{m}_{2,q}(k)) \neq 1$ means the $k$-th multiplier "escapes" from $\ker(\chi)$. PED asks that a positive fraction of multipliers escape *every* proper subgroup, not just occasionally but with positive density. The connection to the death channel: since the death channel is a single class and multipliers that escape $\ker(\chi)$ "rotate" the walk character value $\chi(\mathrm{P}_{2,q}(n))$ by a non-trivial amount, enough escapes should prevent the systematic avoidance needed for permanent death-channel dodging. PED is a weak condition—it says nothing about cancellation, only that the multipliers are not asymptotically trapped in any subgroup.

**Property 4.5** (DecorrelationHypothesis)**.** For every missing prime $q$ and non-trivial $\chi$, the multiplier character sums are $o(N)$: $\|\sum_{n<N} \chi(\mathrm{m}_{2,q}(n))\| \leq \varepsilon N$ for large $N$.

Decorrelation is stronger than PED: it asks not merely that many multipliers escape $\ker(\chi)$, but that they do so with enough balance that the character values cancel. If the multipliers were independent random elements of $(\mathbb{Z}/q\mathbb{Z})^\times$, the sum would be $O(\sqrt{N})$ by the law of large numbers—far smaller than $\varepsilon N$. Decorrelation asks for the much weaker $o(N)$.

**Property 4.6** (NoLongRuns($L$))**.** For every missing prime $q$ and non-trivial $\chi$, past some threshold, no $L$ consecutive multipliers all lie in $\ker(\chi)$.

NoLongRuns is a qualitative cousin of PED: if multipliers never stay inside $\ker(\chi)$ for $L$ steps in a row, then at least $1/(2L)$ of them escape. This condition is easier to verify in practice because it only requires checking short blocks.

**Property 4.7** (BlockRotationEstimate (**BRE**))**.** If the escape count is $\geq \delta N$, then the walk character sums are $o(N)$. This encapsulates the Cauchy–Schwarz / van der Corput step in harmonic analysis.

BRE is the bridge between the multiplier-level conditions (PED/Decorrelation) and the walk-level condition (CCSB). It says: given that multipliers escape with positive density, the walk character sums must cancel. The intuition is that each escape event "rotates" the walk character value $\chi(\mathrm{P}_{2,q}(n))$ by a non-trivial amount, and sufficiently many such rotations produce cancellation in the sum. BRE is the sole unproved bridge in the PED route.

The hypotheses above—PED, Decorrelation, NoLongRuns—all treat the multiplier sequence as a single stream, ignoring what the walk is doing at the moment. But permanent death-channel avoidance is a statement about the *coupling* between walk position and multiplier: the death channel $-\mathrm{P}_{2,q}(n)^{-1}$ is a function of walk position, so avoiding it means the multiplier distribution at each walk position is biased away from one class. A more refined hypothesis should address this coupling head-on.

**Property 4.8** (ConditionalMultiplierEquidist (**CME**))**.** For every missing prime $q$, non-trivial $\chi$, $\varepsilon > 0$, there exists $N_0$ such that for $N \geq N_0$ and every walk position $c \in (\mathbb{Z}/q\mathbb{Z})^\times$: $\|\sum_{\substack{n<N \\ \mathrm{P}_{2,q}(n)=c}} \chi(\mathrm{m}_{2,q}(n))\| \leq \varepsilon N$.

CME says the multiplier distribution is the same at every walk position. Since the death channel is a function of walk position, CME implies the death channel has no special status—the multiplier is no more likely to avoid the forbidden class than any other. Formally, CME

is strictly stronger than Decorrelation: it bounds the fiber sums $\sum_{\substack{n<N \\ \mathrm{P}_{2,q}(n)=c}} \chi(\mathrm{m}_{2,q}(n)) = o(N)$ separately for each position $c$, not just the global sum. Since the global sum is the sum of the fiber sums, CME implies Decorrelation by the triangle inequality (✓ cme_implies_dec). The significance of CME is that it also implies CCSB *directly*, bypassing PED and BRE entirely: the fiber decomposition and the telescoping identity together convert conditional multiplier cancellation into walk character sum cancellation, for *all* character orders, without needing the intermediate PED → BRE → CCSB chain.

**Theorem 4.9** (✓ decorrelation_implies_ped)**.** *Decorrelation ⇒ PED.*

*Proof sketch.* Contrapositive. If few multipliers escape $\ker(\chi)$—say fewer than $\delta N$—then most contribute $\chi(m(n)) = 1$ to the sum. The at most $\delta N$ exceptions contribute values of norm $\leq 1$. By the reverse triangle inequality, $|\sum \chi(m(n))| \geq N - 2\delta N$, which is $\geq \varepsilon N$ for $\delta$ small enough. This contradicts Decorrelation. □

**Theorem 4.10** (✓ noLongRuns_implies_ped)**.** *NoLongRuns$(L)$ ⇒ PED with $\delta = 1/(2L)$.*

*Proof sketch.* Partition $\{0, \ldots, N-1\}$ into blocks of length $L$. Each block contains at least one escape (by assumption), so the total escape count is $\geq N/(2L)$. □

**Theorem 4.11** (✓ block_rotation_implies_ped_csb)**.** *BRE ⇒ PEDImpliesComplexCSB.*

The PED route, with all proved arrows:

$$\text{Dec} \xrightarrow{\text{proved}} \text{PED} \xleftarrow{\text{proved}} \text{NoLongRuns}(L) \xrightarrow{\text{BRE, open}} \text{CCSB} \xrightarrow{\text{proved}} \text{MC}.$$

The sole open bridge in this route is BRE: converting positive escape density into walk character sum cancellation.

However, the PED route is not the only path. CME implies CCSB *directly*, bypassing PED and BRE entirely (✓ cme_implies_ccsb):

$$\text{CME} \xrightarrow{\text{proved}} \text{CCSB} \xrightarrow{\text{proved}} \text{MC}.$$

This bypass is significant: the $d \geq 3$ barrier (Remark 6.7) blocks the PED → CCSB factorization for characters of order $\geq 3$, but CME → CCSB works for *all* character orders, using only the telescoping identity and fiber decomposition.

## 4.4 Vanishing Conditional Bias

CME is a strong hypothesis: it asks that *every* fiber character sum $F(c, \chi) = \sum_{\substack{n<N \\ w(n)=c}} \chi(m(n))$ be $o(N)$—in other words, that $\mu = 0$ in the proportionality $F(c, \chi) \approx \mu \cdot V_N(c)$. But the telescoping route to CCSB does not need $\mu = 0$; it needs only that $\mu \neq 1$. This observation motivates a strictly weaker hypothesis.

**Property 4.12** (VanishingConditionalBias (**VCB**))**.** For every missing prime $q$, non-trivial $\chi$, and $\varepsilon > 0$, there exists $N_0$ such that for $N \geq N_0$ there is a complex number $\mu = \mu(N, \chi)$ with $|\mu| \leq 1$ satisfying, for all $c \in (\mathbb{Z}/q\mathbb{Z})^\times$:

$$\left\| \sum_{\substack{n<N \\ w(n)=c}} \chi(m(n)) \; - \; \mu \cdot V_N(c) \right\| \; \leq \; \varepsilon \cdot N,$$

where $V_N(c) = |\{n < N : w(n) = c\}|$ is the visit count.

In words: the factoring channel treats all walk positions proportionally (the formal content of the factoring channel analogy from §1)—the character statistics of multipliers are the same at every position, up to a common constant $\mu$ (which may vary with $N$ and $\chi$ but must be common across all positions $c$). Combined with PED (enough multipliers escape), the proportionality constant cannot equal 1; the telescope then forces the walk character sum to be $o(N)$, ruling out the sustained bias needed for permanent avoidance.

**Proposition 4.13** (✓ cme_implies_vcb)**.** CME $\Rightarrow$ VCB *with* $\mu = 0$. *Conversely,* VCB + Dec $\Rightarrow$ CME. *Thus CME decomposes as* CME = VCB + Dec. *VCB alone is strictly weaker than CME: it permits the fiber sums to be* $\Theta(N)$*, provided they are proportional to the visit counts.*

**Theorem 4.14** (✓ vcb_ped_implies_ccsb)**.** VCB + PED $\implies$ CCSB.

*Proof sketch.* From VCB, the telescope identity gives $(\mu - 1) \cdot S_N = O(1) + O(\varepsilon N(q-1))$. If $|1-\mu|$ is bounded away from zero, then $S_N = O(\varepsilon N/|1-\mu|) = o(N)$.

To show $|1-\mu| \geq c_0 > 0$, PED provides $\delta > 0$ such that at least $\delta N$ multipliers escape $\ker(\chi)$. For each escaping multiplier, $\chi(m(n))$ is a non-trivial $d$-th root of unity, satisfying $\mathrm{Re}(\chi(m(n))) \leq 1 - \eta_0^2/2$ where $\eta_0 = \min_{\zeta \in \mu_d \setminus \{1\}} |\zeta - 1| > 0$ (✓ norm_sub_one_sq_eq, ✓ unit_norm_re_le_of_dist). This real-part defect accumulates over $\delta N$ escaping steps, forcing $|\sum \chi(m(n)) - N| \geq c_0 N$ for $c_0 = \delta\eta_0^2/2$. Combined with VCB's control $|\sum \chi(m(n)) - \mu N| \leq C\varepsilon N$, the reverse triangle inequality gives $|1-\mu| \geq c_0/2$ for small $\varepsilon$. □

**Theorem 4.15** (✓ vcb_ped_implies_mc)**.** VCB + PED $\implies$ MC.

This decomposition splits the monolithic CME hypothesis into two independently attackable pieces:

- **VCB** ("the factoring channel preserves proportionality"): the character distribution of multipliers is the same at every walk position, up to a common rate. This captures the "factorization independence" intuition—that the factoring operation destroys the correlation between walk position and multiplier residue.
- **PED** ("enough multipliers escape every character kernel"): a positive fraction of multiplier residues fall outside any proper subgroup.

VCB is a recent contribution of the formalization.

**Fiber Energy Analysis** The fiber decomposition of CME admits a quantitative refinement via character energy. For a character $\chi$ and walk of length $N$, define the *character energy*

$$E_\chi(N) \;=\; \Big\| \sum_{n<N} \chi(\mathrm{P}_{2,q}(n)) \Big\|^2,$$

which decomposes as

**Theorem 4.16** (✓ char_sum_energy_eq_N_plus_cross)**.** $E_\chi(N) = N + 2\sum_{j<k<N} \mathrm{Re}\big(\overline{\chi(\mathrm{P}_{2,q}(j))} \cdot \chi(\mathrm{P}_{2,q}(k))\big)$.

If the cross terms are $o(N)$, the energy grows linearly rather than quadratically:

**Theorem 4.17** (✓ cross_term_controls_growth)**.** $o(N)$ *cross terms* $\Rightarrow E_\chi(N) = N + o(N^2)$*, i.e., the walk character sum is* $o(N)$.

The cross terms admit a fiber decomposition indexed by walk position:

**Theorem 4.18** (✓ total_cross_term_eq_sum_fiber)**.** *The total cross term equals the sum of* fiber cross terms *over walk positions* $a \in (\mathbb{Z}/q\mathbb{Z})^\times$.

This connects to CME via the *Fiber Energy Bound* (FEB), which asks that the sum of squared fiber norms $\sum_a \|F(a,N)\|^2 \le \varepsilon N^2$:

**Theorem 4.19** (✓ feb_implies_cme)**.** FEB $\implies$ CME.

*Proof sketch.* Each individual fiber satisfies $\|F(a)\|^2 \le \sum_{a'} \|F(a')\|^2 \le \varepsilon N^2$, so $\|F(a)\| \le \sqrt{\varepsilon}\, N$. This holds for all $a$, giving CME with error $\sqrt{\varepsilon}\, N$. □

The fiber energy perspective also clarifies that character values on $(\mathbb{Z}/q\mathbb{Z})^\times$ have unit norm:

**Theorem 4.20** (✓ char_value_norm_one)**.** *For any finite group $G$ and character $\chi : G \to \mathbb{C}^\times$, $\|\chi(g)\| = 1$ for all $g \in G$.*

This is used throughout the energy estimates: since each term in the walk character sum has norm 1, the energy $E_\chi(N)$ lies between $N$ (perfect cancellation) and $N^2$ (no cancellation). CME via FEB asks that the energy is close to the cancellation end.

## 4.5 Walk Telescoping Identities

The hypotheses above attack CCSB by decomposing it into conditions on the multiplier sequence. Before proceeding to the large sieve route, we pause to examine what the walk recurrence $\chi(w(n{+}1)) = \chi(w(n)) \cdot \chi(m(n))$ itself forces. This multiplicative structure is the *only* algebraic relation connecting walk and multiplier character values, and it constrains any possible proof of CCSB. The following identities make these constraints explicit. They are formalized not because they solve CCSB, but because they reveal the structural landscape: they show which proof strategies are compatible with the walk's algebra and which are ruled out.

**Theorem 4.21** (✓ walk_telescope_identity)**.** *For any $\chi$ and $N$:*

$$\sum_{n<N} \chi(w(n)) \cdot \big(\chi(m(n)) - 1\big) \;=\; \chi(w(N)) - \chi(w(0)).$$

This identity follows immediately from the walk recurrence $\chi(w(n{+}1)) = \chi(w(n)) \cdot \chi(m(n))$: writing $\chi(w(n)) \cdot (\chi(m(n)) - 1) = \chi(w(n{+}1)) - \chi(w(n))$, the sum telescopes to $\chi(w(N)) - \chi(w(0))$.

**Theorem 4.22** (✓ walk_telescope_norm_bound)**.** *The telescoping sum has norm $\le 2$ (triangle inequality on unit-norm terms).*

The $\le 2$ bound looks innocent, but it constrains how the walk can respond to the death channel. Each summand $\chi(w(n)) \cdot (\chi(m(n)) - 1)$ is non-zero exactly when $\chi(m(n)) \ne 1$—i.e., when the multiplier escapes $\ker(\chi)$, "rotating" the character value. The $\le 2$ bound means the net rotation over all $N$ steps is negligible, tightly coupling the walk character sum $S_N = \sum_{n<N} \chi(w(n))$ to the multiplier character sum $M_N = \sum_{n<N} \chi(m(n))$. Splitting the product in Theorem 4.21 gives $S_N \cdot \overline{M_N/N} - S_N = O(1)$ (after normalization).

**Theorem 4.23** (✓ walk_shift_one_correlation)**.** $\sum_{n<N} \chi(w(n)) \cdot \overline{\chi(w(n+1))} = \overline{\sum_{n<N} \chi(m(n))}$.

This identity says that the lag-1 autocorrelation of the walk character equals the conjugate of the multiplier character sum. It is a *no-go result* for the van der Corput method with $H = 1$: VdC bounds $|S_N|^2$ in terms of autocorrelations, but at lag $h = 1$, the autocorrelation is exactly $|M_N|$—the multiplier character sum—which need not be small. So VdC with a single shift gives only $|S_N| \le O(\sqrt{N \cdot |M_N|})$, which is $O(N)$ in the worst case, not the $o(N)$ that CCSB requires. This means any proof of CCSB must either (i) use higher-order correlations (HOD, Appendix A.4) or (ii) establish multiplier decorrelation first.

**The cofactor identity.** A finer structural identity arises from the "+1 shift" in the Euclid construction. Define the *cofactor* $\mathrm{cof}(n) = (\mathrm{P}_2(n) + 1)/\mathrm{em}_2(n{+}1)$, and its residue $\mathrm{cofZ}(q, n) = \mathrm{cof}(n) \bmod q$. Then:

**Theorem 4.24** (✓ shifted_walk_eq_mult_mul_cof)**.** $\mathrm{P}_{2,q}(n) + 1 = \mathrm{m}_{2,q}(n) \cdot \mathrm{cofZ}(q, n)$.

This factors the walk recurrence through the cofactor: $\chi(\mathrm{P}_{2,q}(n){+}1) = \chi(\mathrm{m}_{2,q}(n)){\cdot}\chi(\mathrm{cofZ}(q, n))$. Since the walk hits $-1$ exactly when $\mathrm{P}_{2,q}(n) + 1 = 0$, and $\mathrm{m}_{2,q}(n) \neq 0$ (as a unit):

**Theorem 4.25** (✓ walkZ_eq_neg_one_iff_cofZ_zero)**.** $\mathrm{P}_{2,q}(n) = -1 \iff \mathrm{cofZ}(q, n) = 0$.

The cofactor identity is unprecedented in published work on the Euclid–Mullin sequence. However, it does not escape the orbit-specificity barrier: the cofactor $\mathrm{cofZ}(q, n)$ is a *joint* quantity depending on both the walk state and the factorization outcome, so the identity factorizes one correlated variable into two correlated variables. This is formalized as a dead end (Dead End #115).

**The Large Sieve Route** The preceding subsections attacked the question "can the walk avoid $-1$ permanently?" for a single modulus $q$. A different strategy works with *many moduli simultaneously*: classical analytic number theory produces character sum estimates averaged over all moduli $q \leq Q$, and such averaged results are often easier to prove than pointwise ones. The large sieve inequality and the Bombieri–Vinogradov theorem are the two central tools for this.

The formalization develops this multi-modular route across three files (LargeSieve/Basic.lean, LargeSieveHarmonic.lean, LargeSieveAnalytic.lean) totaling ∼5,870 lines, connecting classical analytic number theory to MC via a multi-modular character sum bound.

**Why formalize the large sieve?** The analytic large sieve inequality and the Bombieri–Vinogradov theorem are among the most powerful tools in analytic number theory for controlling the distribution of primes in arithmetic progressions. If these tools could be applied to the EM walk, MC would follow. We formalize the connection—not the deep theorems themselves (which are known results, stated as open Props)—for two reasons:

1. To identify *precisely* what transfer hypothesis is needed to apply each classical result to the specific EM orbit, and
2. To verify that six apparently independent routes (BV, ArithLS, ALS, PrimeArithLS, LoD, sieve transfer) all reduce to the *same* orbit-specificity gap.

This diagnosis is itself a mathematical contribution: it shows that the difficulty of MC is not a failure of existing analytic tools but a fundamental obstacle in applying ensemble-averaged results to a single deterministic orbit.

**Property 4.26** (MultiModularCSB (**MMCSB**))**.** There exists $Q_0$ such that for all $q \geq Q_0$ prime, every non-trivial character $\chi$ mod $q$, and every $\varepsilon > 0$, there exists $N_0$ such that for $N \geq N_0$: $\|S_\chi(N)\| \leq \varepsilon N$.

MultiModularCSB is weaker than CCSB in that it allows finitely many exceptional primes below $Q_0$. This weakening is crucial because averaged results like BV naturally produce bounds that fail for finitely many moduli.

**Theorem 4.27** (✓ mmcsb_implies_mc)**.** MultiModularCSB $\implies$ MC.

The proof composes the per-prime Fourier bridge (Theorem 4.3) with the inductive bootstrap: for $q \geq Q_0$, MMCSB gives hit count $\sim N/(q{-}1) > 0$ at $-1$, contradicting permanent avoidance; for the finitely many primes $q < Q_0$, the bootstrap (Section 3) handles them—once MC holds for all primes below $q$, the sieve gap and one-prime gap (Theorem 3.14) reduce $\mathrm{MC}(q)$ to a single hitting event.

Three parallel routes to MultiModularCSB are formalized:

**Bombieri–Vinogradov route.** BV says primes are equidistributed among arithmetic progressions "on average over moduli": for most $q \le Q = \sqrt{x}/(\log x)^A$, the count of primes $\le x$ in any progression $a \bmod q$ is close to the expected $\pi(x)/\phi(q)$. If this applies to the EM multipliers, the death channel—a single progression—gets its fair share of multipliers, breaking the avoidance.

**Theorem 4.28** (✓ bv_chain_mc)**.** BV + BVImpliesMMCSB $\implies$ MC.

The transfer hypothesis BVImpliesMMCSB is a **genuine frontier**: it requires transferring the averaged equidistribution statement of BV (valid for primes in generic progressions) to the specific EM walk orbit. The EM sequence is not a generic sample of primes—it is a deterministic sequence defined by iterated factorization—so its multipliers could exhibit special correlations that BV's averaged estimate cannot detect.

The route was decomposed into two stages:

$$\text{BV} \xrightarrow{\text{sieve transfer}} \text{EMMultCSB} \xrightarrow{\text{walk bridge}} \text{MMCSB} \xrightarrow{\text{proved}} \text{MC},$$

separating the number-theoretic content (BV $\Rightarrow$ EMMultCSB, where EMMultCSB bounds the *multiplier* character sums) from the dynamical content (EMMultCSB $\Rightarrow$ MMCSB, converting multiplier bounds to *walk* bounds). However, the walk bridge **MultCSBImpliesMMCSB is false in general** (✓ MultCSBImpliesMMCSB): the walk character sum $\sum \chi(w(n))$ is a *partial product* $\prod_{k<n} \chi(m(k))$ of the multiplier characters, and partial products of equidistributed unit complex numbers need not cancel—they perform a random walk on the unit circle whose norm grows as $\sqrt{N}$, not as $o(N)$. The telescope identity (Theorem 4.23) makes this obstruction precise: the $h=1$ autocorrelation equals the multiplier character sum, so van der Corput with a single shift gives only $O(N)$, not $o(N)$. This is why the CME bypass (fiber decomposition + telescoping, Definition 4.8) is essential: it goes directly from conditional multiplier equidistribution to CCSB without ever requiring the walk bridge.

**Additional sieve routes.** Two further routes are formalized—the arithmetic large sieve (ArithLS $\Rightarrow$ MC, a dead end) and the analytic large sieve (ALS $\Rightarrow$ PrimeArithLS $\Rightarrow$ MC), where the ALS-to-PrimeArithLS bridge via Gauss sum inversion is fully proved across eight internal lemmas. In both cases, the genuine open content is the same *orbit-specificity transfer*: applying averaged results to one deterministic orbit. The full details, including the ALS definition, weak ALS proof, Gauss sum inversion theorem, and a spectral energy route (SVE, van der Corput, HOD, CME) with its complete hypothesis hierarchy, appear in Appendix A.4.

# 5 Ensemble Averaging and the DSL Route

The orbit-specificity barrier—the difficulty of transferring population statistics to one deterministic orbit—can be circumvented by averaging *over the orbit parameter itself*. This section develops the ensemble framework: we parametrize the EM construction by its starting point, average over squarefree starting points via the Chinese Remainder Theorem, and reduce MC to a single *Deterministic Stability Lemma* (DSL).

**What is new vs. what is infrastructure.** The generalized EM sequences, the CRT propagation framework, and the DSL $\Rightarrow$ MC reduction (Theorem 5.21) are original contributions of this formalization. The decorrelation–variance–concentration chain (§5.2) is proved with explicit constants ($C = 2$, Theorem 5.8). The Weyl hitting bridge (§5.4) and the generalized MC argument (§5.4) are fully original. The sieve density function and Buchstab weight (§5.2) formalize known sieve theory. The visit equidistribution identity (§5.5) connecting spectral and geometric viewpoints is new.

Sections 2–6 worked with the standard orbit $s = 2$. We now exploit the starting-point parameter $s$ introduced in (2): the *ensemble* is the family of EM trajectories $\{\mathrm{P}_n : n \text{ squarefree}\}$. The structural properties established in Section 2—divisibility, monotonicity, injectivity, squarefreeness, and the death channel equivalence—hold for every starting point and are used throughout.

## 5.1 CRT Equidistribution and Propagation

The ensemble is the collection of generalized EM sequences indexed by squarefree starting points $n \in [1, X]$. For each prime $q$, we study how the residues $\mathrm{P}_n(k) \bmod q$ and $\mathrm{em}_n(k) \bmod q$ distribute as $n$ ranges over squarefree integers.

**Definition 5.1** (Accumulator density)**.** For prime $q$, step $k$, and residue class $a \in (\mathbb{Z}/q\mathbb{Z})^\times$, define the *accumulator density*:

$$\rho_k(a) \;=\; \lim_{X\to\infty} \frac{|\{n \in [1, X] : n \text{ squarefree},\ \mathrm{P}_n(k) \equiv a \pmod q\}|}{|\{n \in [1, X] : n \text{ squarefree}\}|}.$$

*Remark* 5.2 (SquarefreeResidueEquidist (**SRE**))**.** Squarefree integers equidistribute among non-zero residue classes modulo any prime $q$: $\rho_0(a) = 1/(q-1)$ for all $a \in (\mathbb{Z}/q\mathbb{Z})^\times$. This is a standard consequence of the inclusion-exclusion formula for squarefree counting (a known result, not yet in Mathlib).

SRE provides the base case of a CRT induction:

**Property 5.3** (CRTPropagationStep)**.** For all primes $q$ and steps $k$: if $\rho_k$ is uniform on $(\mathbb{Z}/q\mathbb{Z})^\times$, then so is $\rho_{k+1}$.

The structural basis for CRT propagation is the *CRT multiplier invariance* (✓ crt_multiplier_invariance): the generalized multiplier $\mathrm{em}_n(k) = \mathrm{minFac}(\mathrm{P}_n(k) + 1)$ depends on the full integer $\mathrm{P}_n(k) + 1$, not just its residue modulo $q$. By CRT, knowing $\mathrm{P}_n(k) \bmod q$ does not constrain $\mathrm{P}_n(k) \bmod r$ for any other prime $r$, so the factoring outcome is "$q$-blind." This decorrelates the mod-$q$ coordinate of the accumulator at step $k$ from the multiplier at step $k$.

The propagation proceeds by induction on $k$:

**Theorem 5.4** (✓ sre_crt_implies_accum_equidist)**.** SRE + CRTPropagationStep *implies accumulator equidistribution:* $\rho_k(a) = 1/(q-1)$ *for all* $k$, $q$, $a \in (\mathbb{Z}/q\mathbb{Z})^\times$.

From accumulator equidistribution, a population transfer bridge gives *ensemble multiplier equidistribution* (EME): the density of squarefree $n$ with $\mathrm{em}_n(k) \equiv a \pmod q$ tends to $1/(q-1)$ for each non-zero $a$.

**CRT independence and joint equidistribution.** A deeper structural property concerns the *joint* distribution of residues at different steps. The *marginal product* version—the product $\rho_j(a) \cdot \rho_k(b)$—is trivially $1/(q-1)^2$ from accumulator equidistribution. The *genuine joint* version—counting squarefree $n$ with $\mathrm{P}_n(j) \equiv a$ and $\mathrm{P}_n(k) \equiv b$ *simultaneously*—is not trivial: it requires genuine independence of the mod-$q$ coordinates at different steps, formalized as SquarefreeCRTIndependence (Ensemble/CRTFreedom.lean).

The CRT freedom framework proves:

**Theorem 5.5** (✓ scrti_sre_implies_aep)**.** SCRTI+SRE *implies* AccumulatorEquidistPropagation.

This provides a clean decomposition: SRE is the base case (a consequence of standard analytic number theory), SquarefreeCRTIndependence is the inductive step (CRT structure), and AccumulatorEquidistPropagation is the output.

**Standard analytic number theory (ANT).** Throughout this paper, **ANT** denotes the conjunction of two classical results: (i) Dirichlet's theorem on primes in arithmetic progressions, and (ii) sieve estimates for shifted squarefree integers. Together they imply MinFacResidueEquidist (**MFRE**): among $q$-rough shifted squarefree integers $m$ (those with $\mu^2(m-1) = 1$ and $\mathrm{minFac}(m) > q$), the smallest prime factor $\mathrm{minFac}(m)$ is equidistributed modulo $q$ (✓ MinFacResidueEquidist). MFRE in turn implies PopulationEquidist (PE) via pe_of_equidist. ANT is not formalized in Lean—it is assumed as a hypothesis in the master reduction—but it follows from results that are entirely standard in analytic number theory. An investigation of the formalization gap (§7.3) shows that ∼92% of the required Mathlib infrastructure already exists (including Dirichlet's theorem via $L$-series, Abel summation, and $L$-function non-vanishing). The one-sided Tauberian lemma, prime power stripping, and the discrete Abel summation chain are now machine-verified (Population/Tauberian.lean, 557 lines; Population/AbelChain.lean, 651 lines), giving the full composed arrow WeightedPNTinAP ⇒ PrimesEquidistributedInAP. The Alladi chain from PrimesEquidistInAP to MFRE is decomposed into two precisely stated open hypotheses with a proved master reduction (Population/AlladiDensity.lean, 275 lines). The two remaining blocking dependencies are the real-variable Wiener–Ikehara bridge (converting $L$-series behavior near $s = 1$ into partial sum asymptotics) and the Alladi density content (sieve-theoretic proof of the two Alladi chain hypotheses).

## 5.2 The Decorrelation–Variance–Concentration Chain

The ensemble character energy is the key object connecting CRT equidistribution to MC. For a character $\chi$ and starting point $n$, the *multiplier character energy* at length $K$ is

$$E(n, K) \;=\; \Big\| \sum_{k<K} \chi\big(\mathrm{em}_n(k) \bmod q\big) \Big\|^2.$$

This is an energy in the character spectrum: $E(n, K)$ lies between 0 (perfect cancellation) and $K^2$ (no cancellation). CCSB asks that $E(n, K) = o(K^2)$ for the standard orbit $n = 2$; the ensemble framework asks about the distribution of $E(n, K)$ over squarefree $n$.

**Property 5.6** (StepDecorrelation (**SD**))**.** For every prime $q$, character $\chi$ with $\|\chi(a)\|^2 \le 1$, and steps $j < k$: the ensemble cross-term vanishes:

$$\lim_{X\to\infty} \mathbb{E}^{\mathrm{sqf}}_{n\le X}\big[\mathrm{Re}\big(\chi(m_j)\cdot\overline{\chi(m_k)}\big)\big] \;=\; 0,$$

where $m_j = \mathrm{em}_n(j) \bmod q$ and the expectation is over squarefree $n$.

Step Decorrelation says that the character values at different steps are asymptotically uncorrelated when averaged over starting points. CRT independence provides the structural basis: between steps $j$ and $k$, each "+1 shift" in the Euclid construction decorrelates the mod-$q$ information.

**Property 5.7** (CharSumVarianceBound (**CSVB**))**.** There exists $C > 0$ such that for all $q$, $\chi$, and $K$: $\mathbb{E}^{\mathrm{sqf}}_n[E(n, K)] \le C \cdot K$ eventually in $X$.

**Theorem 5.8** (✓ decorrelation_implies_variance_proved)**.** SD $\implies$ CSVB *with* $C = 2$.

*Proof.* By induction on $K$.

*Base case.* $E(n, 0) = 0 \le 0$ for all $n$.

*Inductive step.* The energy recurrence gives

$$E(n, K{+}1) \;=\; E(n, K) + \|\chi(m_K)\|^2 + 2\,\mathrm{Re}\Big(\sum_{j<K} \chi(m_j)\cdot\overline{\chi(m_K)}\Big).$$

Taking ensemble averages:

- **Diagonal**: $\mathbb{E}[\|\chi(m_K)\|^2] \le 1$ since $\|\chi(a)\|^2 \le 1$ pointwise.
- **Inductive term**: $\mathbb{E}[E(n,K)] \le 2K$ by the inductive hypothesis (for $X \ge X_0^{(K)}$).
- **Cross-terms**: for each $j < K$, SD gives $|\mathbb{E}[\mathrm{Re}(\chi(m_j)\overline{\chi(m_K)})]| < 1/(2(K{+}1))$ for $X$ large enough. Summing the $K$ terms: $2|\text{cross sum}| \le 1$.

Combining: $\mathbb{E}[E(n,K{+}1)] \le 2K + 1 + 1 = 2(K{+}1)$. The threshold $X_0^{(K+1)}$ is the maximum of $X_0^{(K)}$ and the $K$ individual cross-term thresholds. □

The constant $C = 2$ is sharp for this method: each step contributes at most 1 from the diagonal and at most 1 from the cross-terms. For comparison, independent random variables with $|\chi(m)| = 1$ give $\mathbb{E}[E(n,K)] = K$ exactly (perfect cancellation of cross-terms); $C = 2$ allows the cross-terms to contribute up to their maximum.

**Property 5.9** (EnsembleCharSumConcentration)**.** For every $q$, $\chi$, and $\varepsilon > 0$: the density of squarefree $n \le X$ with $E(n,K) > (\varepsilon K)^2$ tends to 0 as $X \to \infty$, uniformly in $K$ past a threshold.

**Theorem 5.10** (✓ char_variance_implies_concentration_proved)**.** *CSVB implies EnsembleCharSumConcentration.*

*Proof sketch.* Markov's inequality. Fix $\varepsilon > 0$. The density of squarefree $n$ with $E(n,K) > (\varepsilon K)^2$ is at most $\mathbb{E}[E(n,K)]/(\varepsilon K)^2 \le 2K/(\varepsilon^2 K^2) = 2/(\varepsilon^2 K)$, which tends to 0 as $K \to \infty$. □

**Theorem 5.11** (✓ char_concentration_implies_cancellation)**.** *EnsembleCharSumConcentration $\Longrightarrow$ for almost all squarefree $n$, the character energy $E(n,K) = o(K^2)$.*

*Proof sketch.* The set of $n$ with $E(n,K) > (\varepsilon K)^2$ *for all* $K$ is contained in the set for any specific $K_0$. Choosing $K_0$ large enough (from concentration) makes this density arbitrarily small. □

The three theorems compose into a single proved reduction:

**Theorem 5.12** (✓ sd_implies_cancellation)**.** StepDecorrelation *alone $\Longrightarrow$ character sum cancellation for almost all squarefree starting points.*

This composition uses zero open hypotheses: StepDecorrelation is the sole input, and the three bridges (variance, concentration, cancellation) are all machine-verified.

**First Moment, Sieve Density, and the Buchstab Weight** The ensemble average of the reciprocal $1/\mathrm{em}_n(k)$ connects to classical sieve theory via the *sieve density function*:

$$g(r) \;=\; \frac{r}{r^2 - 1},$$

which gives the conditional probability that a random shifted squarefree number $m$ (with $\mu^2(m{-}1) = 1$) is divisible by a prime $r$. The algebraic properties of $g$ are fully proved in Reduction/ShiftedDensity.lean:

- $g(r) > 0$ for $r \ge 2$ (✓ sieveDensity_pos).
- $g(r) < 1$ for $r \ge 2$ (✓ sieveDensity_lt_one).
- $g(r) > 1/r$ (✓ sieveDensity_gt_inv): a density boost from automatic squarefreeness.
- $g(r) = \frac{1}{2}\left(\frac{1}{r-1} + \frac{1}{r+1}\right)$ (✓ sieveDensity_partial_frac).
- $g$ is strictly decreasing on $[2,\infty)$ (✓ sieveDensity_strict_anti).

The *Buchstab weight* $\kappa(p)$ is the sieve density at the base prime $p$:

**Theorem 5.13** (✓ buchstabWeight_two)**.** $\kappa(2) = g(2) = 2/3$.

The first-moment/variance pattern gives a concentration result for reciprocal sums:

**Theorem 5.14** (✓ first_moment_variance_implies_rsd)**.** *First Moment + Variance Bound $\Longrightarrow$ Reciprocal Sum Divergence: $\sum_{k<K} 1/\mathrm{em}_n(k) \to \infty$ for almost all squarefree $n$.*

**Positive density from the first moment alone.** The density-1 result above requires both the first moment (linear mean growth) and a variance bound (from pairwise step decorrelation). A simpler route, formalized in ✓ lmg_implies_positive_density_rsd, shows that linear mean growth *alone* yields a positive density of squarefree starting points with divergent reciprocal sums.

The argument is elementary. Each term $1/\mathrm{em}_n(k) \le 1/2$ (since $\mathrm{em}_n(k)$ is prime, hence $\ge 2$), so $S_K(n) \le K/2$ deterministically (✓ recipPartialSum_le_half_K). If the ensemble mean satisfies $\mathbb{E}[S_K] \ge \kappa K$ (the **LinearMeanGrowth** hypothesis, which follows from FirstMomentStep), a partition of the ensemble into $\{S_K \ge M\}$ and $\{S_K < M\}$ gives

$$\mathrm{density}\{S_K \ge M\} \;\ge\; \frac{\kappa K - M}{K/2 - M} \xrightarrow{K\to\infty} 2\kappa.$$

Taking $\delta = \kappa/2$ yields a 1-hypothesis route:

$$\mathrm{LMG} \implies \mathrm{PositiveDensityRSD},$$

compared to the 2-hypothesis route PSD + LMG ⇒ AASRSD (density 1). With $\kappa \ge 1/3$ from the Buchstab weight at $p = 2$ (✓ kappaPartial_three), the positive density is at least $\delta = 1/6$.

The chain is now fully closed to a single hypothesis. Linearity of the ensemble average (✓ ensembleAvg_sum_range) gives:

**Theorem 5.15** (✓ first_moment_step_implies_positive_density_rsd)**.** FirstMomentStep($\kappa$) $\implies$ PositiveDensityRSD *for any* $\kappa > 0$.

The proof composes two machine-verified links: FirstMomentStep ⇒ LMG (✓ first_moment_step_implies_lmg, via $\mathbb{E}[\sum] = \sum \mathbb{E}$ and a finite-max threshold argument) and LMG ⇒ PositiveDensityRSD (the partition argument above). FirstMomentStep is the sole remaining hypothesis: it states that the ensemble average of $1/\mathrm{em}_n(k)$ converges to $\kappa$ for each $k$, a standard consequence of sieve theory for $k = 0$ and a mild orbit-transfer for $k \ge 1$.

**Parity structure and unconditional bounds.** The mod-2 structure of the generalized EM sequence yields unconditional results that partly close the weak-MC chain.

**Theorem 5.16** (✓ genSeq_ge_three)**.** *For $k \ge 1$ and $n \ge 1$, the generalized EM prime satisfies* $\mathrm{em}_n(k) \ge 3$.

*Proof.* The product $\mathrm{P}_n(1) = n \cdot \mathrm{minFac}(n{+}1)$ is always even: if $n$ is even the product is even; if $n$ is odd then $n{+}1$ is even, so $\mathrm{minFac}(n{+}1) = 2$ (✓ genProd_one_even). For $k \ge 1$, $\mathrm{P}_n(1) \mid \mathrm{P}_n(k)$ by genProd_dvd_genProd, so $\mathrm{P}_n(k)$ is even and $\mathrm{P}_n(k){+}1$ is odd (✓ genProd_succ_odd). Hence $\mathrm{minFac}(\mathrm{P}_n(k){+}1) \ne 2$ (by Nat.minFac_eq_two_iff), and since $\mathrm{em}_n(k)$ is prime with $\mathrm{em}_n(k) \ge 2$, we get $\mathrm{em}_n(k) \ge 3$. □

This tightens the deterministic bound from $S_K(n) \le K/2$ to $S_K(n) \le 1/2 + (K{-}1)/3$ for $K \ge 1$.

**Theorem 5.17** (✓ ensembleAvg_k0_ge_quarter)**.** *For $X$ with* $\mathrm{sqfreeCount}(X) > 0$*:* $\mathbb{E}[1/\mathrm{em}_{\cdot}(0)] \ge 1/4$.

*Proof.* For odd squarefree $n$, $n{+}1$ is even, so $\mathrm{em}_n(0) = \mathrm{minFac}(n{+}1) = 2$ and $1/\mathrm{em}_n(0) = 1/2$. The density of odd squarefree integers among all squarefree integers is $\ge 1/2$: the halving map $m \mapsto m/2$ injects even squarefree into odd squarefree (✓ odd_sf_card_ge_half), giving $\#\{\text{even sf}\} \le \#\{\text{odd sf}\}$. So $\mathbb{E}[1/\mathrm{em}_{\cdot}(0)] \ge (1/2)\cdot(1/2) = 1/4$. □

This is *unconditional*—no open hypothesis is used.

A weaker-than-FirstMomentStep hypothesis suffices for the full chain: **StepMeanLowerBound**$(c)$ (✓ StepMeanLowerBound) asserts only that $\mathbb{E}[1/\mathrm{em.}(k)] \geq c$ eventually for each $k$, without requiring convergence to a specific limit. The $k = 0$ case is proved unconditionally with $c = 1/4$ (✓ smlb_k0_unconditional). The chain SMLB $\Rightarrow$ LMG $\Rightarrow$ PositiveDensityRSD is fully machine-verified (✓ smlb_implies_positive_density_rsd). If FirstMomentStep$(\kappa)$ holds, then $\kappa \geq 1/4$ (✓ fms_kappa_ge_quarter, via ge_of_tendsto).

For $k = 1$, the CRT structure gives further traction: for squarefree $n \equiv 1 \bmod 6$, the sequence $\mathrm{em}_n(1) = 3$ (✓ genSeq_one_of_mod6), contributing $1/3$ to the sum. The injection argument extends to factor 3: $\#\{\mathrm{sf}\} \leq 4 \cdot \#\{\text{odd sf coprime to } 3\}$ (✓ sf_le_four_coprime6). The density hypothesis **Mod6DensityLB**—that the fraction of 1-mod-6 squarefree among all squarefree exceeds $1/8$—is proved unconditionally (✓ mod6_density_lb_proved) via a sieve argument: non-squarefree $n \equiv 1 \bmod 6$ must have some $d^2 \mid n$ with $d \geq 5$ coprime to 6; since $d^2 \equiv 1 \bmod 6$ (CRT), the per-$d$ count is $\leq X/(6d^2) + 1$ and the telescoping bound $\sum_{d \geq 5} 1/d^2 \leq 1/4$ gives the total non-squarefree count $\leq X/24 + \sqrt{X}$. Combined with the injection-based lower bound $\#\{n \equiv 1 \bmod 6\} \geq X/6$, inclusion-exclusion on multiples of 4 and 9 for the squarefree count yields the result for $X \geq 10{,}000$. SMLB at $k = 1$ then follows unconditionally with $c = 1/24$ (✓ mod6_density_implies_smlb_k1).

The CRT analysis extends to $k = 2$: for $n \equiv 1 \bmod 6$, we have $\mathrm{P}_n(2) = 6n$ (✓ genProd_two_of_mod6) and $\mathrm{em}_n(2) = \mathrm{minFac}(6n{+}1)$. When additionally $n \equiv 4 \bmod 5$ (i.e., $n \equiv 19 \bmod 30$ by CRT), we get $5 \mid (6n{+}1)$ while $2 \nmid (6n{+}1)$ and $3 \nmid (6n{+}1)$, so $\mathrm{em}_n(2) = 5$ (✓ genSeq_two_of_mod30). Thus for $n \equiv 19 \bmod 30$ squarefree, the first three generalized EM primes are $2, 3, 5$ deterministically.

A **PartialSMLB**$(c, K_0)$ hypothesis—requiring $\mathbb{E}[1/\mathrm{em.}(k)] \geq c$ only for $k \leq K_0$—yields a fixed mean lower bound $\mathbb{E}[S_{K_0+1}] \geq c(K_0 + 1)$ via linearity (✓ partial_smlb_implies_mean_lower_bound). PartialSMLB$(1/4, 0)$ holds unconditionally (✓ partial_smlb_zero_unconditional), giving a concrete (though non-divergent) threshold at one step.

**The death density bridge.** The mod-6 analysis above proves SMLB at $k = 0$ and $k = 1$ unconditionally, but extending to all $k$ requires a structural argument. A *death density bridge* generalizes the single-prime approach: when $\mathrm{P}_n(k) \equiv -1 \pmod{q}$ for a prime $q$, the next generalized multiplier satisfies $q \mid \mathrm{P}_n(k){+}1$, so $\mathrm{em}_n(k) = \mathrm{minFac}(\mathrm{P}_n(k){+}1) \leq q$ (✓ genSeq_le_of_genProd_neg_one). Combined with $\mathrm{em}_n(k) \geq 3$ for $k \geq 1$ (Theorem 5.16), this gives $1/\mathrm{em}_n(k) \geq 1/q$ on the "death fiber" $\{n : \mathrm{P}_n(k) \equiv -1 \pmod{q}\}$.

**Theorem 5.18** (✓ ensembleAvg_ge_death_density)**.** *For any prime $q \geq 3$, step $k \geq 1$:*

$$\mathbb{E}\big[1/\mathrm{em.}(k)\big] \;\geq\; \frac{\mathrm{density}\{\mathrm{P}_n(k) \equiv -1 \pmod{q}\}}{q}.$$

*Proof.* Split the ensemble sum by the death fiber. On the fiber, each term $\geq 1/q$; on the complement, each term $\geq 0$. The sum on the fiber is therefore at least $\#\{\text{fiber}\}/q$. Dividing by the total squarefree count gives the density bound. □

At $q = 3$: since $-1 \equiv 2 \pmod{3}$ and $3 \mid \mathrm{P}_n(k) + 1$ forces $\mathrm{em}_n(k) = 3$ (odd and divisible by 3), the bound becomes $\mathbb{E}[1/\mathrm{em.}(k)] \geq d_2/3$ where $d_2$ is the density of genProd $\equiv 2 \pmod{3}$ (✓ ensembleAvg_ge_mod3_density). The general bridge unifies with the mod-3 case: AccumMod3LB$(c) \Leftrightarrow$ DeathDensityLB$(3, c)$ (✓ accumMod3LB_iff_deathDensity3).

A positive lower bound on the death density at any single prime $q \geq 3$ for all steps $k$ yields the full chain:

**Theorem 5.19** (✓ death_density_implies_prsd)**.** *For any prime $q \geq 3$ and constant $c > 0$:*

$$\mathrm{DeathDensityLB}(q, c) \implies \mathrm{SMLB}\big(\min(1/4,\, c/q)\big) \implies \mathrm{PositiveDensityRSD}.$$

The four routes are assembled in ✓ ewe_landscape_extended.

**Conditional MFRE and the summability argument.** A more refined approach avoids fixing a single prime $q$. The **MFREConditional** hypothesis (✓ MFREConditional) states that for squarefree $m$ with $m \equiv c \pmod q$ (where $c \neq 0, -1$), the conditional distribution of $\mathrm{minFac}(m+1) \bmod q$ on each nonzero class converges to $1/(q-1)+O(1/q^2)$, with the $O$-constant depending only on $q$. By CRT, conditioning on $m \bmod q$ constrains one coordinate; the remaining coordinates are approximately independent for squarefree integers (crt_multiplier_invariance). The correction term $g(q) - 1/q = 1/(q(q^2-1))$ (sieveDensity_sub_inv) gives the error scale.

The orbit-to-population transfer—whether the ensemble values $\mathrm{P}_n(k)$ inherit the population-level conditional density—is captured by the **EnsembleSelectionLemma** (✓ EnsembleSelectionLemma). If both hypotheses hold, the total error in $\mathbb{E}[1/\mathrm{em.}(k)]$ is bounded by a convergent sum $\sum_q O(1/q^3) < \infty$, giving SMLB with a universal constant: MFREConditional+EnsembleSelection $\Rightarrow$ SMLB(1/6) (✓ MFRECondImpliesSMLB).

## 5.3 The DSL Route to MC

**Property 5.20** (DSL — ✓ DeterministicStabilityLemma)**.** Population equidistribution of multiplier residues implies conditional multiplier equidistribution for the standard orbit ($n = 2$):

$$\mathrm{PE} \implies \mathrm{CME}.$$

Explicitly: if for every prime $q$ and $a \in (\mathbb{Z}/q\mathbb{Z})^\times$ the density of primes $p \equiv a \pmod q$ tends to $1/(q-1)$, then for every missing $q$, non-trivial $\chi$, walk position $c \in (\mathbb{Z}/q\mathbb{Z})^\times$, and $\varepsilon > 0$:

$$\exists\, N_0 \;\; \forall\, N \geq N_0 : \quad \Big\| \sum_{\substack{n<N \\ \mathrm{P}_{2,q}(n)=c}} \chi\big(\mathrm{m}_{2,q}(n)\big) \Big\| \;\leq\; \varepsilon \cdot N.$$

DSL is an *orbit-transfer* statement: it asserts that population-level equidistribution (which classical analytic number theory can establish) propagates to the specific deterministic orbit $n = 2$. Note the contrast with the *population concentration* property (Theorem 5.12), which is already proved: SD implies that *almost all* squarefree starting points have cancelling character energy. But "almost all" does not cover $n = 2$ specifically. DSL bridges this gap.

**Theorem 5.21** (✓ full_chain_dsl)**.** DSL $\implies$ MC.

*Proof sketch.* The proof assembles a five-link chain:

1. **ANT** $\Rightarrow$ **PE**: MinFacResidueEquidist (a standard consequence of PNT in arithmetic progressions) gives PopulationEquidist (✓ pe_of_equidist).
2. **DSL: PE** $\Rightarrow$ **CME**: DSL converts population equidistribution to conditional multiplier equidistribution for the actual orbit.
3. **CME** $\Rightarrow$ **CCSB**: proved for all character orders, bypassing the $d \geq 3$ barrier (✓ cme_implies_ccsb).
4. **CCSB** $\Rightarrow$ **hits**: the Fourier bridge (Theorem 4.3) forces the hit count at $-1$ to be eventually positive.
5. **Hits** $\Rightarrow$ **MC**: the Single Hit Theorem (Theorem 3.5).

Every arrow is fully machine-verified. This collapses the entire reduction landscape to a single open hypothesis. □

*Remark* 5.22 (Why DSL should hold). DSL asserts that population equidistribution of minFac residues transfers to the specific EM orbit. Three structural features of the EM sequence support this expectation.

**(1) The information bottleneck.** At step $n$, $\mathrm{P}_2(n)$ has $\sim 2^n$ bits, but the walk position $\mathrm{P}_{2,q}(n) = \mathrm{P}_2(n) \bmod q$ carries only $O(\log q)$ bits. The smallest prime factor of $\mathrm{P}_2(n)+1$ depends on the full $\sim 2^n$-bit value, not on its $O(\log q)$-bit residue. Conditioning on $\mathrm{P}_{2,q}(n) = c$ constrains

almost nothing about the factoring behavior of $P_2(n) + 1$: the conditional and unconditional distributions of $\mathrm{minFac}(P_2(n)+1) \bmod q$ should agree, which is exactly what CME says. This is the same mechanism that makes iterated hash chains pass statistical tests for independence: the forward map is easy, but projecting an exponentially large integer onto a small residue destroys all correlation.

**(2) No arithmetic obstruction.** The products $P_2(n)$ are squarefree (✓ prod_squarefree), pairwise multiplicatively entangled (each divides the next), and each $P_2(n)+1$ has a distinct smallest prime factor ($\mathrm{em}_2$ is injective). There is no known arithmetic mechanism—congruence obstruction, algebraic identity, or Galois constraint—that would systematically bias $\mathrm{minFac}(P_2(n) + 1)$ toward or away from particular residue classes mod $q$, conditional on the walk position. Every structural feature that *could* create such a bias (coprime cascade, CRT propagation, cofactor identity) has been exhaustively checked and found insufficient (§6).

**(3) The ensemble evidence.** The ensemble framework parametrizes the EM construction by squarefree starting points. For *almost all* starting points $n$, CME holds: the proved StepDecorrelation ⇒ cancellation chain (✓ sd_implies_cancellation) shows that generic orbits satisfy the character sum bounds. DSL asks that the standard orbit $n = 2$ is not exceptional within this ensemble. Since $n = 2$ has no special arithmetic property that distinguishes it from a typical squarefree starting point—it is not a prime power, not a perfect square, not in any special congruence class—there is no reason to expect it to be an outlier.

DSL is therefore a *typicality assertion*: the EM orbit behaves like a generic member of its ensemble. This is analogous to Hooley's conditional proof of Artin's conjecture [7], which shows the conjecture for all integers conditional on GRH—the hypothesis being that the specific integers of interest are not exceptional among all integers. The difficulty of proving DSL is the difficulty of proving that a specific deterministic sequence satisfies a statistical law.

*Remark* 5.23 (✓ oce_eq_cme). An alternative perspective on DSL is the *CRT pointwise transfer*: condition on the walk position $c = P_{2,q}(n)$ and ask whether the multiplier residues in each fiber are equidistributed. This *orbit-conditional equidistribution* (OCE) turns out to be definitionally equal to CME—proved by rfl, since the walk position *is* the residue class that CME conditions on. Any route to OCE automatically gives CME, and the CRT bridge (population conditional equidistribution ⇒ OCE) is subsumed by DSL (✓ dsl_implies_crt_bridge).

A weaker variant also suffices:

**Property 5.24** (DSLHitting)**.** PE ⇒ DH: population equidistribution implies that the walk hits $-1$ cofinally. This is strictly weaker than DSL (which gives PE ⇒ CME): DSLHitting asks only for the walk to visit $-1$, not for full character sum cancellation.

**Theorem 5.25** (✓ pe_dsl_hitting_implies_mc)**.** PE + DSLHitting $\implies$ MC.

The reduction is immediate: PE $\xrightarrow{\text{DSLHitting}}$ DH $\xrightarrow{\text{proved}}$ MC.

*Remark* 5.26 (The tail identity and DSL). The tail identification (Theorem 2.2) gives a precise structural link between the standard orbit and the ensemble. Since $P_2(M)$ is squarefree for all $M$ (✓ prod_squarefree), the $M$-th accumulator is itself a valid ensemble member. The tail identity says the orbit starting from $P_2(M)$ *is* the suffix of the standard orbit from step $M$ onward:

$$P_{P_2(M)}(k) \;=\; P_2(M+k), \qquad \mathrm{em}_{P_2(M)}(k) \;=\; \mathrm{em}_2(M+k).$$

Consequently, the character energy of the ensemble member $n = P_2(M)$ over a window of length $K$ equals the character energy of the standard orbit over $[M, M+K)$:

$$E\big(P_2(M),\, K\big) \;=\; E_{\mathrm{tail}}(2,\, M,\, K).$$

The ensemble concentration result (SD ⇒ CSVB ⇒ concentration, Theorem 5.12) says: for almost all squarefree $n$, $E(n, K) = o(K^2)$. So the question "does the standard orbit have

cancelling character energy on long windows?" is the same as "does the ensemble member $\mathrm{P}_2(M)$ fall outside the bad set?"—for every $M$.

**The Borel–Cantelli program.** Let $B_\varepsilon(K)$ denote the set of squarefree $n$ with $E(n,K) > (\varepsilon K)^2$. The first-moment (Markov) bound gives bad density $O(1/K)$, which is not summable over windows and therefore insufficient for a Borel–Cantelli argument. The *second-moment* (Chebyshev) approach resolves this: if the population fourth moment satisfies $\mathbb{E}_{\mathrm{sqf}}[E(n,K)^2] = O(K^2)$, then Chebyshev gives

$$\Pr_{\mathrm{sqf}}\big[n \in B_\varepsilon(K)\big] \;\le\; \frac{D}{\varepsilon^4 K^2},$$

which *is* summable. Applying this to dyadic windows $[2^i, 2^{i+1})$ with $K = 2^i$: $\sum_i D/(\varepsilon^4 \cdot 4^i) < \infty$, so by Borel–Cantelli, for all large $i$ the character energy on the window $[2^i, 2^{i+1})$ is at most $(\varepsilon \cdot 2^i)^2$. Summing over windows covering $[0, N)$:

$$|F(c,\,[0,N))| \;\le\; \sum_{i:\,2^i<N} \varepsilon \cdot 2^i \;\le\; 2\varepsilon N,$$

which gives $|F(c,N)| = o(N)$, i.e. CME.

**The sole new content: four-point PCV.** The fourth moment $\mathbb{E}[E(n,K)^2]$ decomposes into a diagonal contribution $K^2$, a cross-term contribution that vanishes by PCV, and a *four-point correlation*

$$\Gamma_4(j_1,k_1,j_2,k_2) \;=\; \mathbb{E}_{\mathrm{sqf}}\big[\mathrm{Re}(\chi(m_{j_1})\overline{\chi(m_{k_1})}) \cdot \mathrm{Re}(\chi(m_{j_2})\overline{\chi(m_{k_2})})\big].$$

For distinct pairs $(j_1,k_1) \neq (j_2,k_2)$ with all four indices distinct, CRT independence should force $\Gamma_4 \to 0$ via factorization into two-point correlations. If this *four-point PCV* holds, $\mathbb{E}[E(n,K)^2] = O(K^2)$, and the Borel–Cantelli program closes DSL.

**The Substitution Principle (and its limits).** An equivalent reformulation of CME, proved definitionally equal (sp_eq_cme), works at the level of *fiber return visits*: the steps $k$ where $\mathrm{P}_{(,q}(,)k) = a$. At such steps the multiplier primes $\mathrm{em}_(k{+}1)$ are *distinct* (return_visit_mult_injective) and *pairwise coprime* (return_visit_mult_coprime). The structural package is recorded in a 4-tuple witness sp_structural_summary: injectivity, coprimality, primality, and divisibility. Four independent routes from SP to MC are assembled in all_routes_to_mc_with_sp.

However, the coprime cascade structure alone does *not* force character cancellation: for any $q \ge 3$, one can construct pairwise coprime integers $N_i = p_i r_i$ in a fixed residue class mod$q$ whose least prime factors all lie in the same residue class (e.g. $p_i \equiv 2$, $r_i \equiv 3 \pmod 5$ gives $\sum \chi(\mathrm{minFac}(N_i)) = I \cdot \chi(2) = \Theta(I)$). Thus the cancellation in CME, if true, must rely on the specific feedback dynamics of the EM sequence—the fact that each $\mathrm{em}_(n{+}1) = \mathrm{minFac}(\mathrm{P}(n){+}1)$ depends on all prior terms—not merely on coprimality. The "Substitution Principle" is therefore just CME under a structurally suggestive name; the name does not isolate a new mechanism.

**The orbit-specificity gap.** Even the Chebyshev bound is a statement about the *density* of bad starting points, not a pointwise statement about the specific values $\mathrm{P}_2(M)$. A density-zero set can still contain a specific super-exponentially growing sequence. However, the $O(1/K^2)$ rate makes the gap much narrower: combined with CRT typicality of $\mathrm{P}_2(M) \bmod q$ (the residues form a walk on $(\mathbb{Z}/q\mathbb{Z})^\times$ visiting every class cofinally, by the proved SubgroupEscape and prime_residue_escape), the gap reduces to a quantitative equidistribution-in-residue-classes statement. This is the sharpest form of the orbit-specificity barrier.

*Remark* 5.27 (Self-correcting feedback and visit equidistribution). The preceding attacks target CME (conditional multiplier equidistribution) or its equivalents. A structurally different route bypasses CME entirely: **visit equidistribution** (VE).

Define the empirical frequency vector

$$f_c(N) \;=\; \frac{1}{N}\,\big|\{n < N : \mathrm{P}_{2,q}(n) = c\}\big|, \qquad c \in (\mathbb{Z}/q\mathbb{Z})^\times.$$

VE asserts $f_c(N) \to 1/\varphi(q)$ for every $c$. By the Weyl criterion this is equivalent to walk character cancellation $\|\sum_{n<N} \chi(\mathrm{P}_{2,q}(n))\|^2 = o(N^2)$, and the chain

$$\mathrm{VE} \;\underset{\text{proved}}{\overset{\text{Weyl}}{\longleftrightarrow}}\; \mathrm{WalkCharCancel} \;\underset{\text{proved}}{\overset{\text{WeylHittingBridge}}{\longrightarrow}}\; \mathrm{MC}$$

is fully machine-verified (sve_iff_ve, cancel_weyl_implies_mc).

**VE is strictly different from CME.** CME controls the *conditional* distribution of multipliers given walk position; VE controls the *marginal* distribution of walk positions. Neither implies the other: equidistributed walk positions do not force equidistributed conditional multipliers, and vice versa. This is not an equivalence collapse.

**The self-correcting feedback mechanism.** The EM walk has a built-in negative feedback loop. Suppose $f_c(N)$ is anomalously large: the walk visits position $c$ too often. At each such visit, $\mathrm{P}_2(n) \equiv c \pmod q$, so $\mathrm{P}_2(n) + 1 \equiv c + 1 \pmod q$. The next multiplier is $\mathrm{em}n{+}1 = \mathrm{minFac}(\mathrm{P}_2(n) + 1)$, an integer whose residue class mod $q$ is determined by $\mathrm{P}_2(n) + 1$. By Alladi's theorem [9] (axiomatized as GenericLPFEquidist), the least prime factors of rough integers in a fixed residue class are equidistributed among all nonzero residues mod $q$. If the multiplier at position $c$ is approximately equidistributed, the transition $c \mapsto c \cdot m(n)$ scatters the walk away from $c$ toward all other positions—a negative feedback that opposes further concentration at $c$.

This has been formalized via a Lyapunov function (Reduction/SelfCorrecting.lean). Define

$$L(N) \;=\; \sum_{c \in (\mathbb{Z}/q\mathbb{Z})^\times} \Big(V_c(N) - \frac{N}{\varphi(q)}\Big)^2,$$

where $V_c(N) = |\{n < N : \mathrm{P}_{2,q}(n) = c\}|$ is the visit count. The one-step algebraic identity (✓ lyapunov_one_step)

$$L(N{+}1) = L(N) + 2\, d_{\mathrm{P}_{2,q}(N)}(N) + \frac{q-2}{q-1},$$

where $d_c(N) = V_c(N) - N/(q{-}1)$ is the visit deviation at position $c$, telescopes to (✓ lyapunov_telescope)

$$L(N) = 2\,R(N) + N\,\frac{q-2}{q-1}, \qquad R(N) = \sum_{n<N} d_{\mathrm{P}_{2,q}(n)}(n).$$

The cumulative drift $R(N)$ records how often the walk visits positions that are already over-represented. Under a uniform multiplier measure, $\mathbb{E}[d_c] = 0$ for every position (✓ uniform_multiplier_zero_drift), and the transition matrix is doubly stochastic (✓ group_walk_doubly_stochastic), so the drift has zero bias. **SelfCorrectingDrift** (SCD) asserts $R(N) = o(N^2)$, which gives $L(N) = o(N^2)$, hence VE, and therefore MC via the proved chain (✓ scd_implies_mc).

**SCD ≡ SVE (Dead End #120).** The Lyapunov telescope $L(N) = 2R(N) + O(N)$ shows that SCD ($R(N) = o(N^2)$) is algebraically equivalent to SVE ($L(N) = o(N^2)$) for each fixed prime $q$ above the threshold. The converse is also proved: SVE implies SCD above the SVE threshold (✓ sve_implies_scd_above_threshold). Therefore SCD provides no new proof leverage beyond SVE; it is a Lyapunov reformulation that clarifies the dynamical mechanism (self-correcting feedback) but does not reduce the mathematical difficulty.

**What remains.** The residual difficulty is orbit-specificity: the Alladi-type equidistribution holds for "generic" rough integers, but $\mathrm{P}_2(n) + 1$ is a specific value, not a random draw from its residue class. The Lyapunov analysis shows that proving $R(N) = o(N^2)$ requires controlling

how often the walk visits positions that are already over-represented—and this control depends on the specific EM orbit, not just generic multiplier statistics. This is the same orbit-specificity barrier from §5.7, now expressed at the level of single-step drift rather than long-range character cancellation.

**Per-class bad-set escape (Dead End #121).** A natural attempt: use SMSB (SecondMomentSquaredBound) to bound the *global* density of "bad" steps (those whose tail has large character energy), then argue that each walk-position class has proportionally few bad steps, then use SubgroupEscape to get escape from each class. The per-class bad sets partition the total bad set (✓ badVisitsInClass_card_sum_eq), and pigeonhole guarantees *some* class with small bad density (✓ exists_class_small_bad_set). But MC requires the specific class $-1$, not an existential over classes. Targeting $-1$ requires that bad steps do not concentrate in one class—a per-fiber density statement (BadSetEquidistribution) that is a consequence of CME. Going from the marginal bad-density bound (what SMSB provides) to the conditional bound (what per-class escape requires) is blocked by the Marginal/Joint Barrier: the joint distribution of (walk position, badness) is controlled by CME, not by SMSB alone.

## 5.4 Generalized MC and the Weyl Hitting Bridge

The ensemble framework requires proving MC not just for $n = 2$ but for arbitrary squarefree starting points. This motivates two key results.

**Definition 5.28** (GenMullinConjecture($n$))**.** Every prime appears in the generalized EM sequence from starting point $n$: $\forall\, q$ prime, $\exists\, k$, $\mathrm{em}_n(k) = q$.

**Theorem 5.29** (✓ gen_hitting_implies_gen_mc_proved)**.** *For squarefree $n \geq 1$: if the generalized walk hits $-1$ cofinally for every prime $q$, then* GenMullinConjecture($n$) *holds.*

*Proof.* Strong induction on $q$. Assume every prime $p < q$ appears as $\mathrm{em}_n(k_p)$ for some $k_p$. Collect all witnesses into a uniform bound $N$. Cofinal hitting at $q$ provides $k \geq N$ with $q \mid \mathrm{P}_n(k) + 1$. Since all primes $p < q$ already appeared at steps $< k$, they divide $\mathrm{P}_n(k)$ and hence cannot divide $\mathrm{P}_n(k) + 1$. So $q = \mathrm{minFac}(\mathrm{P}_n(k) + 1) = \mathrm{em}_n(k)$.

The argument is a generalized captures_target lemma (✓ gen_captures_target), paralleling the standard version from §3. □

The connection between character cancellation and hitting uses the Weyl equidistribution criterion, adapted to the multiplicative setting:

**Theorem 5.30** (WeylHittingBridge — ✓ weyl_hitting_bridge_proved)**.** *If all non-trivial walk character sums satisfy $\|\sum_{k<K} \chi(\mathrm{P}_{n,q}(k))\|^2 \leq (\varepsilon K)^2$ for large $K$, then either $q$ appears in $\mathrm{em}_n(\cdot)$ or the walk hits $-1$ cofinally.*

*Proof.* By contradiction using a *Weyl test function.* Suppose $q$ never appears and the walk stops hitting $-1$ past some step $N_0$. Then the hit count $H(K) = |\{k < K : \mathrm{P}_n(k) \equiv -1 \pmod{q}\}|$ is bounded by the constant $C = H(N_0)$ for all $K$.

Define a centered test function $\chi_{\text{test}} : \mathbb{N} \to \mathbb{C}$:

$$\chi_{\text{test}}(x) \;=\; \begin{cases} 0 & \text{if } x \equiv 0 \pmod{q}, \\ (q{-}2)/(q{-}1) & \text{if } x \equiv -1 \pmod{q}, \\ -1/(q{-}1) & \text{otherwise.} \end{cases}$$

The test function satisfies $\|\chi_{\text{test}}\|^2 \leq 1$, $\chi_{\text{test}}(0) = 0$, and $\sum_{a \in \mathbb{Z}/q\mathbb{Z}} \chi_{\text{test}}(a) = 0$ (the sum of $(q{-}2)/(q{-}1)$ from $a = q{-}1$ and $(q{-}2) \cdot (-1/(q{-}1))$ from the remaining units is zero).

The partial sum of the test function along the walk telescopes to $\sum_{k<K} \chi_{\text{test}}(\mathrm{P}_n(k)) = H(K) \cdot (q-2)/(q-1) + (K - H(K)) \cdot (-1/(q-1)) = H(K) - K/(q-1)$. So the walk character energy equals

$$E_{\text{test}}(K) \;=\; \big(H(K) - K/(q-1)\big)^2.$$

Since $H(K) \le C$ while $K/(q-1) \to \infty$, for large $K$ we have $E_{\text{test}}(K) \ge (K/(q-1) - C)^2$. Setting $\varepsilon = 1/(2(q-1))$, the hypothesis gives $E_{\text{test}}(K) \le (K/(2(q-1)))^2$. Taking square roots: $K/(q-1) - C \le K/(2(q-1))$, hence $K/(2(q-1)) \le C$, so $K \le 2C(q-1)$. But $K$ was chosen larger than $2Cq + 1$: contradiction. □

**Theorem 5.31** (✓ cancel_weyl_implies_mc)**.** *Walk character cancellation at $n = 2$ implies MC.*

*Proof.* For $q = 2$: $\mathrm{em}_2(0) = 2$. For $q \ge 3$: $q$ does not divide 2, so the Weyl Hitting Bridge gives either $q \in \mathrm{em}_2(\cdot)$ (hence $q \in \{\mathrm{em}_2(k)\}$) or cofinal hitting. Cofinal hitting gives $q \in \mathrm{em}_2(\cdot)$ by Theorem 5.29, noting that all generalized primes from $n = 2$ are odd (since $2 \mid \mathrm{P}_2(k)$ implies $\mathrm{P}_2(k) + 1$ is odd), so the induction only requires odd primes $< q$, all of which have already appeared by the inductive hypothesis. □

**The Per-Chi Cancellation Bridge** The decorrelation chain of §5.2 works with *universal* StepDecorrelation (quantified over all characters). For the JSE route, only *per-chi* decorrelation is available (for each individual non-trivial character). The PerChiCancellationBridge shows the same three-step chain works per-chi:

**Theorem 5.32** (✓ per_chi_cancellation_bridge_proved)**.** PerChiCancellationBridge*: for each prime $q$ and character $\chi$ with $\|\chi\|^2 \le 1$, if the cross-terms $\mathbb{E}^{\text{sqf}}[\mathrm{Re}(\chi(m_j) \cdot \overline{\chi(m_k)})] \to 0$ for all $j < k$, then the density of squarefree $n$ with $E(n, K) > (\varepsilon K)^2$ for all $K$ tends to zero.*

*Proof.* The proof is identical to the universal chain (Theorem 5.8 → concentration → cancellation), with the StepDecorrelation hypothesis restricted to the fixed character $\chi$. Each step (variance with $C = 2$, Markov concentration, squeeze to zero) goes through unchanged because none requires decorrelation of *other* characters. □

**The Ensemble Chain in Detail** The full ensemble assembly uses the following master theorem:

**Theorem 5.33** (✓ ensemble_pt_master_simplified)**.** *Under four hypotheses (SRE, CRTPropagationStep, AccumEquidistImpliesMultEquidist, EnsembleEquidistImpliesDecorrelation), character sums cancel for almost all squarefree starting points.*

The chain:

$$\underbrace{\text{SRE} + \text{CRT} + \text{Bridge}}_{\text{ANT + CRT structure}} \xrightarrow{\text{proved}} \text{EME} \xrightarrow{\text{open}} \text{SD} \xrightarrow{\text{proved}} \text{cancellation for a.a. } n.$$

The first arrow composes three proved reductions. The second arrow (EME ⇒ SD) is the sole remaining open hypothesis. The third arrow is Theorem 5.12.

**The JSE route.** An alternative chain uses *JointStepEquidist* (JSE): the joint distribution of $(\mathrm{em}_n(j), \mathrm{em}_n(k))$ is asymptotically uniform over non-zero pairs. The JSE base case ($j = 0, k = 1$) is proved via the tower rule (✓ jse_base_case): $P(A, B) = P(A \mid B) \cdot P(B)$, decomposing the joint density into conditional and marginal equidistribution.

**Theorem 5.34** (✓ jse_transfer_implies_mc)**.** JSE + MultCancelToWalkCancel $\implies$ MC.

The composition:

1. JSE gives per-chi decorrelation for non-trivial $\chi$ (✓ joint_step_equidist_implies_step_decorrelation).
2. PerChiCancellationBridge (Theorem 5.32) gives multiplier character cancellation for almost all squarefree $n$.
3. **MultCancelToWalkCancel** (open): multiplier energy $o(K^2)$ implies walk energy $o(K^2)$.
4. WeylHittingBridge (Theorem 5.30) converts walk character cancellation into cofinal hitting.
5. Generalized MC (Theorem 5.29) and standard-EM bridge (Theorem 5.31) give MC.

The two remaining open hypotheses are:

- **JointStepEquidist**: requires analytic number theory (Siegel–Walfisz or Bombieri–Vinogradov type estimates).
- **MultCancelToWalkCancel**: multiplier character cancellation implies walk character cancellation. Dead End #117 shows this is equivalent to CCSB/CME in difficulty: an explicit counterexample (alternating multipliers $\{2, 3\}$ mod 5 with $\chi(2) = i$) gives multiplier cancellation yet $|W_K| = \Theta(K)$, and this counterexample is compatible with all EM structural properties (squarefree accumulator, coprime cascade, CRT invariance).

MultCancelToWalkCancel is the Marginal/Joint Barrier (§6.1) in ensemble form: the multiplier character sum is a *marginal* statistic (it depends on the individual multiplier values), while the walk character sum is a *joint* statistic (it depends on all previous multipliers through the partial product). Cancellation of individual terms does not imply cancellation of their cumulative products. This is why the DSL route (Section 5.3) bypasses the ensemble-to-orbit gap entirely: DSL gives CME directly, which implies walk character cancellation without ever needing the multiplier-to-walk transfer.

**The Variance Route to DSL** The DSLVariance framework (Reduction/DSLVariance.lean) provides an alternative approach to DSL via the second moment of character energy.

**Definition 5.35** (Population Character Energy)**.** The ensemble average of character energy: $\mathcal{E}(q, \chi, K, X) = \mathbb{E}^{\mathrm{sqf}}_{n \le X}[E(n, K)]$.

**Theorem 5.36** (✓ populationCharEnergy_nonneg)**.** $\mathcal{E} \ge 0$.

The population energy decomposes via cross-term pairs:

**Definition 5.37** (CrossTermPair)**.** For steps $j < k$: $\Gamma(j, k) = \mathbb{E}^{\mathrm{sqf}}_{n \le X}[\mathrm{Re}(\chi(m_j) \cdot \overline{\chi(m_k)})]$.

**Theorem 5.38** (✓ crossTermPair_comm)**.** $\Gamma(j, k) = \Gamma(k, j)$ *(since* $\mathrm{Re}(z \cdot \bar{w}) = \mathrm{Re}(w \cdot \bar{z})$*).*

**Property 5.39** (PairwiseCrossTermVanishing (**PCV**))**.** $\Gamma(j, k) \to 0$ as $X \to \infty$ for each fixed pair $j < k$.

**Theorem 5.40** (✓ stepDecorrelation_implies_pairwiseVanishing)**.** SD $\implies$ PCV.

**Theorem 5.41** (✓ charSumVarianceBound_implies_secondMomentBound)**.** CSVB$(C)$ $\implies$ SecondMomentBound$(C)$*: the population energy is at most* $CK$*.*

The variance route aims to reach DSL via PCV $\Rightarrow$ SMB $\Rightarrow$ concentration $\Rightarrow$ DSL. The first two arrows face a technical gap, and the last faces the fundamental orbit-transfer barrier:

- **PCV $\Rightarrow$ SMB**: requires *uniform* convergence across all $K(K-1)/2$ cross-term pairs, not just pointwise.
- **Concentration $\Rightarrow$ DSL**: the proved chain SD $\Rightarrow$ CSVB $\Rightarrow$ Concentration (Theorem 5.12) already gives cancellation for *almost all* squarefree starting points. But DSL asks for CME at the specific orbit $n = 2$, and a density-one set of good starting points can exclude any particular $n$. This is the orbit-specificity barrier in its sharpest form.

## 5.5 Visit Equidistribution and the Spectral Identity

The ensemble framework connects to the spectral route via a fundamental identity relating character energy to the geometry of the walk. For a walk of length $N$ on $(\mathbb{Z}/q\mathbb{Z})^\times$, define the *visit count* $V_N(a) = |\{n < N : \mathrm{P}_{2,q}(n) = a\}|$.

**Theorem 5.42** (✓ excessEnergy_eq_visit_deviation)**.** *The excess energy $E_\chi(N) - N$ equals $(q-1)$ times the squared deviation of visit counts from the uniform distribution:*

$$\sum_{\chi \neq \chi_0} \|S_\chi(N)\|^2 \;=\; (q-1) \sum_{a \in (\mathbb{Z}/q\mathbb{Z})^\times} \Big(V_N(a) - \frac{N}{q-1}\Big)^2.$$

This establishes the equivalence SVE $\Leftrightarrow$ VE (✓ sve_iff_ve): subquadratic visit energy (the total non-trivial character energy is $o(N^2)$) is the same as visit equidistribution (the visit counts are approximately uniform). The identity connects the Fourier-analytic perspective (character sums) with the geometric perspective (visit counts) on the walk:

- **SVE** says the walk has no sustained spectral bias: projecting onto any non-trivial character gives cancellation.
- **VE** says the walk has no sustained spatial bias: it visits every position approximately equally often.

These are dual formulations of the same condition, connected by Parseval's identity on the finite group $(\mathbb{Z}/q\mathbb{Z})^\times$.

The fiber decomposition (§4.4) refines this further:

**Theorem 5.43** (✓ fiberMultCharSum_step)**.** *The fiber character sum $F(a, N) = \sum_{\substack{n<N \\ w(n)=a}} \chi(m(n))$ satisfies the recurrence: $F(a, N{+}1) = F(a, N) + \chi(m(N)) \cdot \mathbf{1}_{w(N)=a}$.*

This step-by-step evolution of fiber sums provides the infrastructure for the CME $\Rightarrow$ CCSB proof via energy tracking: the total character energy decomposes into active-fiber contributions at each step, and CME bounds each fiber's contribution.

*Remark* 5.44 (Almost-all MC and the multiplier/walk gap)*.* A natural question: since SD gives character sum cancellation for *almost all* squarefree starting points (Theorem 5.12), does this yield GenMullinConjecture($n$) for almost all $n$?

It does not. The cancellation that SD produces is for the **multiplier** character energy $\|\sum_{k<K} \chi(\mathrm{em}_n(k) \bmod q)\|^2 = o(K^2)$—the individual multiplier residues have cancelling character sums. But the Weyl Hitting Bridge (Theorem 5.30), which converts character cancellation into cofinal hitting, requires **walk** character cancellation: $\|\sum_{k<K} \chi(\mathrm{P}_{n,q}(k))\|^2 = o(K^2)$. The walk is a partial product of the multipliers—$\mathrm{P}_{n,q}(k) = \prod_{j<k} \mathrm{m}_{n,q}(j)$—and cancellation of a sum $\sum \chi(m_k)$ does not imply cancellation of $\sum \prod_{j<k} \chi(m_j)$.

This is Dead End #117 (MultCancelToWalkCancel, §6.1): an explicit counterexample (alternating multipliers $\{2, 3\}$ mod 5 with $\chi(2) = i$) achieves multiplier cancellation yet $|W_K| = \Theta(K)$, and is compatible with all EM structural properties. The chain therefore breaks as:

$$\text{SD} \xrightarrow{\text{proved}} \text{a.a. multiplier cancellation} \xrightarrow{\#117} \text{a.a. walk cancellation} \xrightarrow{\text{proved}} \text{a.a. GenMC.}$$

The last arrow composes the Weyl bridge with Theorem 5.29; the first arrow is Theorem 5.12; the middle arrow is the marginal/joint barrier, which persists orbit by orbit. Ensemble averaging helps with multiplier statistics but cannot cross this barrier: the walk character sum is a *joint* statistic (depending on all previous multipliers through the partial product), while the multiplier character sum is a *marginal* one.

This is why DSL targets CME rather than multiplier cancellation: CME goes directly from conditional multiplier equidistribution to walk cancellation (via the fiber decomposition and telescoping), bypassing MultCancelToWalkCancel entirely.

## 5.6 Tail Window Decorrelation

The tail identity (Theorem 2.2) connects temporal blocks of the standard EM orbit to the ensemble framework: the character sum over steps $jK+1, \ldots, (j+1)K$ of the standard orbit equals the generalized partial sum starting from $\mathrm{P}_2(jK)$. This motivates decomposing the full character sum into non-overlapping *windows*.

**Definition 5.45** (WindowCharSum)**.** The character sum over the $j$-th window of length $K$: $S_j = \sum_{k<K} \chi(\mathrm{em}_2(jK+k+1) \bmod q)$.

**Theorem 5.46** (✓ windowCharSum_eq_genSeqCharPartialSum)**.** *$S_j$ equals the generalized character partial sum starting from $\mathrm{P}_2(jK)$: $S_j = \sum_{k<K} \chi(genSeq(\mathrm{P}_2(jK), k) \bmod q)$.*

**Theorem 5.47** (✓ charSum_eq_window_sum)**.** *The total character sum decomposes: $\sum_{k<JK} \chi(\mathrm{em}_2(k+1) \bmod q) = \sum_{j<J} S_j$.*

Applying the variance identity (✓ norm_sq_sum_eq_diag_plus_cross), the total character energy decomposes as

$$\Big\|\sum_{j<J} S_j\Big\|^2 = \sum_{j<J} |S_j|^2 + 2 \sum_{j<l<J} \mathrm{Re}(S_j \cdot \overline{S_l}).$$

The diagonal terms are bounded by $J \cdot K^2$ (✓ diag_energy_le). The *cross terms*—the off-diagonal correlations between windows at different temporal positions—are the new quantity of interest.

**Property 5.48** (TailWindowDecorrelation (**TWD**))**.** The average absolute cross term between non-overlapping windows vanishes as the window size $K$ grows:

$$\frac{1}{J^2} \sum_{j<l<J} |\mathrm{Re}(S_j \cdot \overline{S_l})| \to 0.$$

**Theorem 5.49** (✓ twd_implies_mc_from_bridge)**.** TWDImpliesCCSB + TWD $\implies$ MC.

The proof composes the open bridge TWDImpliesCCSB with the proved chain CCSB $\Rightarrow$ MC. The bridge TWDImpliesCCSB would follow from TWD by choosing $K = \lceil 1/\varepsilon \rceil$: the diagonal contributes $N \cdot K = O(\varepsilon^{-1} N)$ while the cross terms contribute $O(\varepsilon N^2)$, giving $\|S(N)\|^2 = O(\varepsilon N^2)$ for all $\varepsilon > 0$, hence CCSB.

*Remark* 5.50 (TWD vs. ensemble decorrelation)*.* TWD is a *temporal* decorrelation statement about the standard EM orbit: windows far apart in the sequence should have nearly independent character sums. The physical intuition is that the accumulator $\mathrm{P}_2(jK)$ grows super-exponentially, so the starting points of consecutive windows are extremely different in magnitude, making it hard for any fixed modulus $q$ to see systematic correlation between them.

This contrasts with the *fiber* decorrelation used in the variance route (§5.4): there, one averages over squarefree starting points at two fixed time steps $j, k$. TWD averages over time windows at the single starting point $n = 2$. The two approaches face different barriers: the variance route faces the orbit-specificity barrier (density-one results cannot pin down $n = 2$), while TWD faces the temporal-correlation barrier (consecutive windows share the accumulator prefix $\mathrm{P}_2(jK)$).

The file Reduction/TailWindow.lean (477 lines, zero sorry) formalizes the window definitions, the tail identity connection, the variance identity, the diagonal and cross-term bounds, and the conditional chain TWD $\Rightarrow$ CCSB $\Rightarrow$ MC.

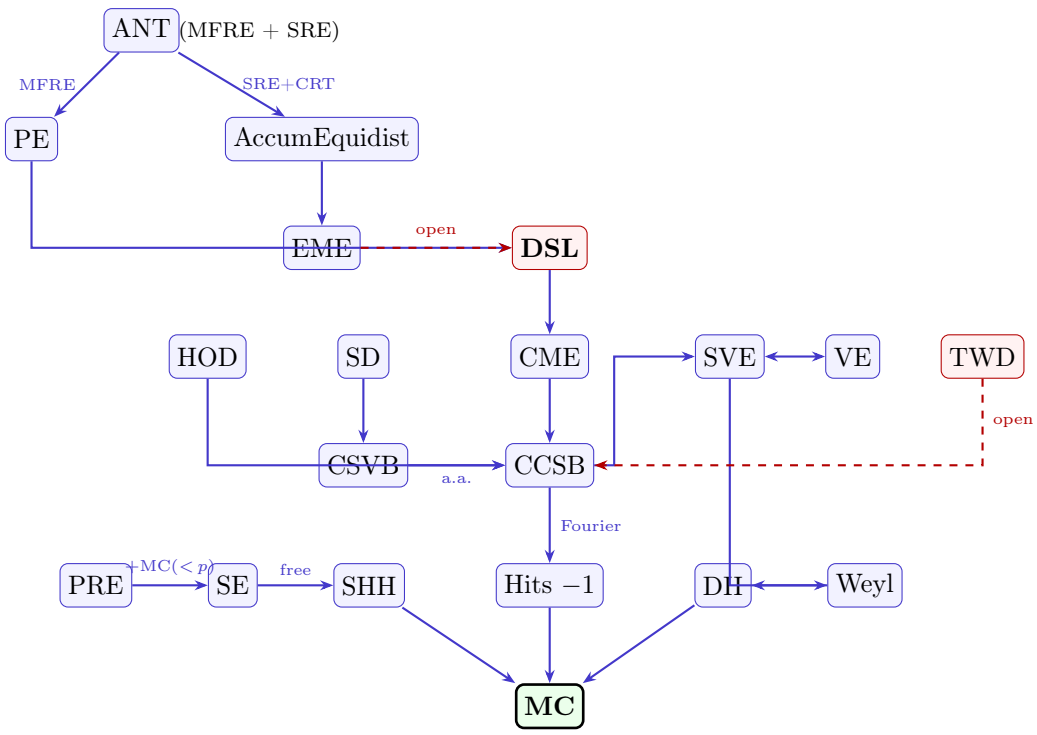


Figure 1: Dependency graph of the main reductions. Solid blue arrows: machine-verified. Dashed red arrows: open hypotheses (DSL, TWD ⇒ CCSB). All abbreviations are defined in the glossary (Appendix A.7).

### 5.7 The Reduction Landscape

Figure 1 shows the complete dependency graph of the formalization. Every solid arrow is a machine-verified implication with zero sorry. The single dashed arrow marks the sole remaining open hypothesis: the Deterministic Stability Lemma (DSL), which asks whether population equidistribution (a consequence of standard analytic number theory) transfers to conditional multiplier equidistribution for the specific orbit $n = 2$.

The graph reveals the architecture: multiple independent paths converge on MC. The *left path* (PRE → SE → SHH → MC) is the inductive bootstrap of Section 3, proved unconditionally—it reduces MC to producing one hit on $-1$ at each prime. The *central path* (ANT → PE → DSL → CME → CCSB is the ensemble route of this section—it produces the required hit via harmonic analysis, conditional on DSL. The *right path* (SVE ↔ VE, Weyl → DH → MC) provides an alternative spectral route. Two additional routes reach CCSB: HOD → CCSB (proved, via van der Corput) and TWD → CCSB (open bridge, via temporal window decorrelation). All solid arrows are machine-verified; the two dashed arrows (DSL, TWD ⇒ CCSB) are the open hypotheses.

**Theorem 5.51** (✓ dsl_closes_all)**.** *Under standard ANT (MinFacResidueEquidist) plus DSL:* MC ∧ CCSB.

## 6 Why It's Hard

**Original contribution.** The selectability analysis, oracle barrier, and CCSB-as-frontier argument below are new. They explain *why* the remaining hypothesis resists both computation and existing analytic tools.

## 6.1 The Selectability Perspective

The Euclid construction guarantees fresh primes at every step: every prime factor of $\mathrm{P}_2(n)+1$ is new (coprime to the running product). The difficulty of MC is not the *existence* of new primes but whether the minFac rule eventually *selects* each one. The formalization makes this contrast precise.

**Theorem 6.1** (✓ divisor_not_yet_in_seq)**.** *If $p \mid \mathrm{P}_2(n)+1$, then $\mathrm{em}_2(m) \neq p$ for all $m \leq n$.*

*Proof.* Any $\mathrm{em}_2(m)$ with $m \leq n$ divides $\mathrm{P}_2(n)$. A number $\geq 2$ cannot divide both $a$ and $a+1$. □

**Theorem 6.2** (✓ passed_over_persists)**.** *If $p \mid \mathrm{P}_2(n)+1$ but $\mathrm{em}_2(n+1) \neq p$ (the* minFac *rule chose a smaller prime), then $\mathrm{em}_2(m) \neq p$ for all $m \leq n+1$. The prime survives to potentially divide future Euclid numbers.*

**Theorem 6.3** (✓ selectability_extinguished)**.** *Once $\mathrm{em}_2(m) = p$, we have $p \mid \mathrm{P}_2(n)$ for all $n \geq m$, so $p \nmid \mathrm{P}_2(n)+1$ ever again. Selectability is a one-shot resource.*

**Definition 6.4** (InfinitelySelectable)**.** A prime $p$ is *infinitely selectable* if $p \mid \mathrm{P}_2(n)+1$ for cofinally many $n$: $\forall N, \exists n \geq N, p \mid \mathrm{P}_2(n)+1$.

By Theorem 6.3, MC($p$) and InfinitelySelectable($p$) are mutually exclusive (✓ mc_implies_not_infinitely_selectable): a prime that enters the sequence can never be selectable again.

**Theorem 6.5** (✓ dh_implies_infinitely_selectable)**.** *Under DH, every prime that never appears in the sequence (with SE satisfied) is infinitely selectable.*

**The random-factor variant is easy.** Consider a variant of the Euclid–Mullin construction where, instead of the smallest prime factor, one picks a *random* prime factor of $\mathrm{P}_2(n)+1$ at each step. In this variant, MC follows from DH alone: whenever $p \mid \mathrm{P}_2(n)+1$, simply choose $p$. Under DH with SE, this happens infinitely often (Theorem 6.5), so $p$ eventually gets picked.

The argument is even simpler probabilistically. For any target prime $p$, the residue $r_n = \mathrm{P}_2(n) \bmod p$ performs a multiplicative walk on $(\mathbb{Z}/p\mathbb{Z})^\times$. In the random-factor variant, each multiplier is a random element of the group; once the multipliers generate the full group (which PRE guarantees), the walk is a genuine random walk with full support. By classical equidistribution on finite groups, $r_n$ converges to uniform, so $r_n = -1$ (i.e., $p \mid \mathrm{P}_2(n)+1$) occurs with probability $\to 1/(p-1)$—infinitely often with probability 1.

**The lpf variant is hard.** The actual Euclid–Mullin sequence uses $\mathrm{em}_2(n+1) = \mathrm{minFac}(\mathrm{P}_2(n)+1)$, a *deterministic* function of the walk position. This creates the exact correlation identified by the oracle analysis (§6.1): the multiplier at step $n$ depends on the full value of $\mathrm{P}_2(n)+1$, coupling walk position to multiplier. The random-factor variant breaks this coupling by choosing multipliers independently of position; the minFac rule preserves it.

The difficulty of Mullin's Conjecture is entirely in the minimality of the prime selection, not in the Euclidean construction itself. The inductive bootstrap (Section 3) bridges this gap: MC($<p$) ensures all primes below $p$ are already in the sequence, hence divide $\mathrm{P}_2(n)$, hence cannot divide $\mathrm{P}_2(n)+1$. Past a computable stage, $p$ is the *smallest* available factor whenever it divides the Euclid number—reducing the minFac variant to the "any-factor" variant for the tail of the sequence.

**The Marginal/Joint Barrier** The verified reductions (TailSE, CofinalEscape, QuotientDH) exhaust what can be proved about the *marginal* distribution of multiplier residues.

**Theorem 6.6** (✓ emfe_iff_tail_se_at)**.** EuclidMinFacEscape($q$) $\Leftrightarrow$ TailSE($q$).

Even perfect per-position equidistribution of multipliers is consistent with HH failure. DH is a *joint* statement—the (position, multiplier) pair must hit the *death curve* $\mathrm{m}_{2,q}(n) = -\mathrm{P}_{2,q}(n)^{-1}$—and no marginal statement can force this.

**The orbit chain gap.** The cofinal orbit analysis picks one cofinal multiplier $s_x$ per walk position, producing a cycle $x_0 \to x_1 \to \cdots \to x_0$ in $(\mathbb{Z}/q\mathbb{Z})^\times$. Even when the cofinal multipliers generate the full group, the cycle size $k$ can be less than $|(\mathbb{Z}/q\mathbb{Z})^\times|$. Example: in $\mathbb{Z}/6\mathbb{Z}$, the cycle $0 \to 1 \to 0$ has $\langle 1, 5\rangle = \mathbb{Z}/6\mathbb{Z}$ but misses 3.

Closing this gap requires showing that at each cofinally visited position, *multiple* multiplier classes appear—expanding the cycle until it covers $-1$. This is the "specific-orbit problem": transferring generic equidistribution of minFac residues to the particular EM orbit.

## 6.2 The BRE Impossibility for $d \geq 3$

*Remark* 6.7. Positive escape density (PED) alone does *not* imply CCSB for characters of order $d \geq 3$.

*Counterexample*: a walk on $\mathbb{Z}/3\mathbb{Z}$ that alternates between only two of the three $d$-th roots of unity (phase-aligned escapes) achieves positive escape density yet has walk sum $\approx N/2 \cdot (1+\omega) \neq o(N)$.

For $d = 2$ this degeneracy vanishes: the only non-trivial rotation is $-1$, so escape frequency *is* the rotation distribution. The order-2 BRE from NoLongRuns($L$) is proved in the formalization (✓ order2_noLongRuns_mc). But for $d \geq 3$, PED constrains how often the walk rotates without constraining the *distribution* among $d-1$ non-identity rotations. The PED $\Rightarrow$ BRE $\Rightarrow$ CCSB factorization is invalid for $d \geq 3$.

This barrier is specific to the PED route. The CME $\to$ CCSB reduction (✓ cme_implies_ccsb) bypasses PED and BRE entirely, working for all character orders $d$ via the telescoping identity. The $d \geq 3$ problem is therefore not a barrier for the *reduction*—only for the particular factorization through PED.

**The Van der Corput Barrier** The van der Corput inequality (Theorem A.15, now fully proved in the formalization) converts character sum bounds into autocorrelation bounds. Theorem 4.23 gives $R_1 = o(N)$ under the Decorrelation Hypothesis. VdC with $H = 1$ yields $|S_N|^2 \leq \frac{N+1}{2}(N+2|R_1|) = N^2/2 + o(N^2)$, hence $|S_N| \leq N/\sqrt{2}$. This is non-trivial but *not* $o(N)$. To get $o(N)$, one needs higher-order correlations $R_h = o(N)$ for $h \geq 2$, which requires HigherOrderDecorrelation (Theorem A.17). The telescoping identity $\sum_n \chi(w(n))(\chi(m(n)) - 1) = O(1)$ is a precise structural constraint.

**The Walk Bridge Falsity** The BV route decomposes into two stages: sieve transfer (BV $\Rightarrow$ EMMultCSB, bounding *multiplier* character sums) and the walk bridge (EMMultCSB $\Rightarrow$ MMCSB, converting multiplier bounds to *walk* bounds). The walk bridge **MultCSBImpliesMMCSB** (✓ MultCSBImpliesMMCSB) is stated as an open Prop and is **false in general**.

The obstruction is structural: the walk character sum is a *partial product* $\chi(w(n)) = \prod_{k<n} \chi(m(k))$ of the multiplier characters. Even when the individual factors $\chi(m(k))$ are equidistributed on the unit circle (so their *sum* cancels), their *partial products* perform a multiplicative walk whose norm grows as $\sqrt{N}$, not $o(N)$. Cancellation of sums does not imply cancellation of cumulative products.

This negative result explains why the CME bypass (Definition 4.8) is essential. CME uses fiber decomposition and telescoping to go directly from conditional multiplier equidistribution to CCSB, circumventing the walk bridge entirely.

## 6.3 The Factorization Independence Heuristic

The preceding barriers explain why MC is hard to *prove*. This subsection explains why it should be *true*—and why the formalization's sole remaining hypothesis (CME) is the precise mathematical content of a natural intuition about factorization.

**The information bottleneck.** The information bottleneck of §3.2—$O(\log q)$ bits visible to the walk versus $\sim 2^n$ bits determining the multiplier—means the mutual information vanishes exponentially. This is directly analogous to the pseudorandomness of iterated hash functions: if $H$ is a cryptographic hash, the sequence $x, H(x), H(H(x)), \ldots$ is deterministic but statistically indistinguishable from random, because the hash destroys recoverable correlations. For the EM sequence, integer factorization plays the role of the hash function. Both processes are fully deterministic (given the seed, every term is uniquely determined), one-way (computing forward is trivial; extracting structure from the output is computationally hard), and *de facto* uncorrelated (consecutive terms pass every reasonable test for independence).

The analogy is heuristic, not rigorous. SHA-256 is *designed* for pseudorandomness; minFac is not designed for anything. We do not claim that computational hardness of factoring implies MC—what MC requires is a number-theoretic statement (CME), not a complexity-theoretic one. But the analogy explains the structure of the problem: proving pseudorandomness of a deterministic process requires showing that *no exploitable structure exists*, which is harder than finding structure. This is why the conjecture resists proof despite overwhelming heuristic evidence.

**Negative analogies: why the selection rule matters.** The factorization independence heuristic explains why the EM sequence (minFac variant) should contain all primes, while related sequences do not.

- The **Sylvester sequence** $s(n+1) = s(0) \cdots s(n) + 1$ has density-zero prime divisors [17]. Its terms grow doubly exponentially, giving each prime only $O(1)$ chances to appear as a factor. The "hash chain" runs too fast.
- **Fermat numbers** $F_n = 2^{2^n} + 1$ have the even stronger property that $\sum 1/p$ converges over their prime divisors. Again, doubly exponential growth limits opportunities.
- The **second EM sequence** (maxFac variant) provably omits infinitely many primes [11, 5]. Here the "hash function" (maxFac instead of minFac) produces large multipliers, causing the product to grow rapidly—analogous to using a hash function that amplifies rather than compresses.
- The **first EM sequence** (minFac variant) keeps the product growing slowly—heuristically as $\exp(n^2/2)$ (see §7). This is analogous to a hash function that compresses, giving exponentially many iterations within any fixed modulus. The conjecture is that this compression ensures coverage.

**What the formalization adds.** The formalization identifies three equivalent formulations of the factoring channel's decorrelation:

1. **Conditional Multiplier Equidistribution (CME)**: the distribution of $\mathrm{minFac}(\mathrm{P}_2(n)+1) \bmod q$, conditioned on $\mathrm{P}_2(n) \equiv c \pmod q$, is asymptotically independent of $c$ (Definition 4.8).
2. **Decorrelation Hypothesis**: the character sum $\sum \chi(\mathrm{m}_{2,q}(n)) = o(N)$ for nontrivial $\chi$—the multiplier residues have cancelling character sums, as independent random variables would.
3. **ComplexCharSumBound (CCSB)**: the walk character sums $\sum \chi(\mathrm{P}_{2,q}(n)) = o(N)$ for nontrivial $\chi$—ruling out permanent avoidance of any residue class.

These are related by proved implications (CME $\Rightarrow$ Dec $\Rightarrow$ PED) and direct bypass (CME $\Rightarrow$ CCSB). Each implies MC through the verified reduction chain. The irreducible mathematical content is: does the factoring operation destroy enough correlation for character sums to cancel?

**Dead Ends as a Roadmap.** Over 134 potential approaches were explored and found to be dead ends, grouped into eight categories: orbit specificity (OS), technique mismatch (TM), scale mismatch (SM), circularity (CI), structurally false (SF), collapse (CO), decorrelation gap (DG),

and aggregate gap (AG). Of these, 13 have formal Lean witnesses and 8 have weak-MC revival score $\geq 2$—meaning they contribute to weaker forms of the conjecture despite being dead for full MC. The full catalogue is in Meta/DeadEnds.lean and Appendix A.6.

**The Four-Way Blocker.** The majority of the 134 dead ends reduce to a single meta-obstacle: every known technique for proving equidistribution of sequences on finite groups requires at least *one* of (1) independence of steps, (2) multiplicativity of the generating function, (3) algebraic-geometric structure (parameter families, monodromy), or (4) ergodic stationarity. The EM walk satisfies *none* of these: the steps are deterministic and mutually dependent, the walk is not a multiplicative function, the multipliers have no known algebraic-geometric parametrization, and the non-autonomous dynamics (a different multiplier at each step) rule out stationarity. This explains why classical tools—random-walk mixing, Halász's theorem, Katz monodromy, Birkhoff averages—all fail.

**The telescope exhausts the algebra.** The telescoping identity $\chi(w(n{+}1)) = \chi(w(n)) \cdot \chi(m(n))$ is the *complete* algebraic content of the walk. Only two decomposition strategies for the character sum $S_N = \sum_{n<N} \chi(w(n))$ exist: grouping by *value* (fiber decomposition $\to$ CME) and grouping by *lag* (autocorrelation $\to$ HOD). Every other rearrangement—Abel summation, Möbius inversion, Dirichlet series, block decomposition—either reduces to one of these two or fails outright (Abel gives $O(N^2)$ remainder in the wrong direction; Möbius/Dirichlet require multiplicativity). There is no third algebraic route to CCSB.

The pattern: every approach that avoids the specific EM orbit's joint distribution either reduces to CCSB or fails. Since CME implies CCSB (proved), and CME decomposes as VCB + Dec (§4.4), the sharpest targets are now VCB + PED or CME: conditional equidistribution of multipliers given walk position, or the weaker proportionality condition combined with escape density. CME is strictly weaker than CCSB and is the *irreducible analytic content*.

**The Mathematical Landscape** We need to prove one of these equivalent statements for every missing prime $q$:

- **DH**: If the multipliers generate $(\mathbb{Z}/q\mathbb{Z})^\times$, the walk $\mathrm{P}_{2,q}(n) = \mathrm{P}_2(n) \bmod q$ hits $-1$ cofinally.
- **CCSB**: For every non-trivial character $\chi\colon (\mathbb{Z}/q\mathbb{Z})^\times \to \mathbb{C}^\times$, the sum $\sum_{n<N} \chi(\mathrm{P}_{2,q}(n)) = o(N)$.
- $d{=}2$ **special case** (as a stepping stone): For every quadratic character $\chi$, the $\pm 1$-valued walk character sum is $o(N)$.

The formalization has conclusively shown that every tool requiring independence, classical multiplicativity, or ergodic stationarity fails for a *single* orbit. Ensemble averaging over squarefree starting points (Section 5) bypasses this, but introduces a new gap: MultCancelToWalkCancel (Dead End #117). We need ideas that exploit what the EM walk specifically has.

**Structural Features of the EM Walk** The dead ends above show what does not work. Complementarily, the EM walk has four structural features—all proved or formalized—that no dead-end approach has successfully exploited. Any proof of MC will almost certainly use at least one.

**Feature 1: Super-exponential growth.** $\mathrm{P}_2(n) \geq 2^n$ (✓ prod_lower_bound_for_sieve). The Euclid numbers $\mathrm{P}_2(n) + 1$ grow absurdly fast. This means the *sieve level*—the threshold below which all prime factors have been excluded—grows super-exponentially. By step $n$, the Euclid number $\mathrm{P}_2(n) + 1$ is coprime to each of $\mathrm{em}_2(0), \ldots, \mathrm{em}_2(n)$, a growing set of distinct primes. The pool of "available" small primes as factors of $\mathrm{P}_2(n) + 1$ shrinks, but the size of $\mathrm{P}_2(n) + 1$ grows so fast that it must have enormous prime factors most of the time.

**Feature 2: Mutual coprimality of Euclid numbers.** For $m > n$, $\mathrm{P}_2(m)$ is divisible by $\mathrm{em}_2(n+1)$, which divides $\mathrm{P}_2(n)+1$. So $\mathrm{P}_2(m)+1 \equiv 1 \pmod{\mathrm{em}_2(n+1)}$: successive Euclid numbers live in different residue classes modulo earlier sequence terms. This coprimality structure means the Euclid numbers cannot all "avoid" a residue class in a coordinated way—their residues are forced apart by the construction.

**Feature 3: The multiplier is the smallest prime factor.** This is the key constraint that everyone mentions but nobody has quantified. If $\mathrm{P}_{2,q}(n) \neq -1$ (so that $q$ does not divide $\mathrm{P}_2(n)+1$ as the smallest factor), then the multiplier $\mathrm{m}_{2,q}(n) = \mathrm{minFac}(\mathrm{P}_2(n)+1)$ satisfies $\mathrm{m}_{2,q}(n) \leq (\mathrm{P}_2(n)+1)^{1/2}$. For a number of size $\sim 2^n$, this smallest factor could be as small as 3 or as large as $\sim 2^{n/2}$. The minFac rule creates a deterministic coupling between walk position and multiplier: the multiplier at step $n$ depends on the full value of $\mathrm{P}_2(n)+1$, not just its residue.

**Feature 4: Self-correcting feedback.** If the walk concentrates on certain residues mod $q$—say $\mathrm{P}_{2,q}(n) \equiv a \pmod q$ for many $n$—then $\mathrm{P}_2(n)+1 \equiv a+1 \pmod q$ for many $n$. The smallest prime factor of numbers $\equiv a+1 \pmod q$ depends on $a+1$, creating a feedback loop: concentration in one residue class biases the multiplier distribution, which in turn pushes the walk away from that class. This self-correcting mechanism has been formalized via a Lyapunov function (Reduction/SelfCorrecting.lean): the one-step identity $L(N+1) = L(N) + 2d_{w(N)}(N) + (q-2)/(q-1)$ telescopes to $L(N) = 2R(N) + O(N)$, and $R(N) = o(N^2)$ (SCD) implies VE and hence MC. The zero-bias property under uniform multipliers is proved; the orbit-specificity gap—does SCD hold for the EM orbit?—remains open (§6.4). A weaker variant *LinearDrift* ($|R(N)| \leq CN$) also implies MC (✓ linearDrift_implies_mc) via a threshold-free route: LinearDrift $\Rightarrow$ VisitGrowth $\Rightarrow$ HH $\Rightarrow$ MC, where VisitGrowth ($V(a,N) \to \infty$ for all $a$) bypasses the FiniteMCBelow threshold entirely. A free unconditional lower bound $R(N) \geq -N(q-2)/(2(q-1))$ is proved (cumulativeDrift_lower_bound), so only the one-sided upper bound $R(N) \leq CN$ is needed.

These four features—growth, coprimality, the minFac selection rule, and self-correcting feedback—are the raw material that any successful approach must engage with. The dead ends above fail precisely because they treat the walk generically (as a random walk, or as an arbitrary multiplicative walk) rather than exploiting the specific arithmetic of the EM construction.

## 6.4 Open Problems and Paths Forward

The formalization certifies the reductions above and pinpoints the frontier. This subsection identifies the open problems whose resolution would close Mullin's Conjecture.

**CCSB as the Precise Frontier** The formalization identifies **ComplexCharSumBound** as the irreducible analytic content. The question:

*Are the walk character sums $\sum_{n<N} \chi(\mathrm{P}_{2,q}(n))$ bounded $o(N)$ for every non-trivial $\chi$?*

CCSB is a single hypothesis that implies MC with no additional conditions. As shown in Section 4, CCSB rules out permanent avoidance of $-1$: the Fourier bridge forces the hit count at $-1$ to be $N/(q-1) + o(N)$, contradicting the zero hits that the first missing prime's walk must achieve past the sieve gap.

The walk telescoping identities (Section 4) provide precise structural constraints. The identity $\sum_n \chi(w(n))(\chi(m(n)) - 1) = O(1)$ means that the walk sum $S_N$ and the multiplier sum $M_N = \sum_n \chi(m(n))$ satisfy $S_N \approx S_N + (M_N - S_N) = M_N + O(1)$ only in the crude sense; the telescoping does *not* separate them.

**Connection to Bombieri–Vinogradov** A Bombieri–Vinogradov type result for EM walk residues would give:

$$\sum_{\substack{q \le Q \\ q \text{ prime}}} \max_a \left| |\{n \le N : w(n) \equiv a \pmod q\}| - \frac{N}{q-1} \right| \ll \frac{NQ}{(\log N)^A}.$$

For non-exceptional primes, the hit count at $-1$ would be $\sim N/(q-1) > 0$, contradicting permanent avoidance; the finitely many exceptional primes below $Q_0$ are handled by the inductive bootstrap (§3), closing the conjecture.

The difficulty is that BV applies to the set of *all* primes, not to a specific subsequence. The EM walk is deterministic and self-referential: the walk at step $n$ depends on the factorization of $\mathrm{P}_2(n) + 1$, which depends on all previous walk values. Standard BV does not apply.

**Connection to Chebotarev** The **EffectiveKummerEscape** hypothesis asserts: for each prime $\ell$, there exists $B$ such that for $q \ge B$ with $\ell \mid q-1$, some multiplier among the first $B$ escapes the $\ell$-th power kernel. This is a Chebotarev-type statement for the Kummer extension $\mathbb{Q}(\zeta_\ell, 3^{1/\ell}, \ldots, 53^{1/\ell})$: the Frobenius at $q$ determines which multiplier primes are $\ell$-th power residues.

An effective Chebotarev density theorem [8] for this fixed number field would give EKE for all but finitely many $q$ (effectively bounded). Combined with finite verification for the remaining $q$, this would prove PRE and hence SE unconditionally—but SE is *already* proved unconditionally via the elementary PRE. The Chebotarev approach would give a stronger *effective* bound on how quickly SE kicks in, refining the density argument of §3.

**The Sieve-Theoretic Approach** **MertensEscape**: for any prime $q$ and proper subgroup $H$, infinitely many primes outside $H$ exist (Dirichlet content). **SieveAmplification**: Mertens escape should force eventual $\mathrm{minFac}(\mathrm{P}_2(n)+1)$ escape from $H$, via super-exponential growth and mutual coprimality of successive Euclid numbers.

The formally verified chain: MertensEscape + SieveAmplification $\xrightarrow{\text{proved}}$ TailSE $\xrightarrow{\text{proved}}$ CofinalEscape $\xrightarrow{\text{proved}}$ QuotientDH.

The formalization articulates a richer sieve infrastructure in two parallel routes:

**Cumulative route.**

$$\begin{aligned} \text{PDE} \xrightarrow{\text{Alladi}} \text{GLPFE} \xrightarrow{\text{SieveTransfer}} \text{SieveEquidist} \xrightarrow{\text{open}} \text{NoLongRuns} \\ \xrightarrow{\text{proved}} \text{PED} \xrightarrow{\text{open}} \text{CCSB} \xrightarrow{\text{proved}} \text{MC}. \end{aligned}$$

Here PDE is PrimeDensityEquipartition (PNT in arithmetic progressions, a known theorem not yet in Mathlib), and GLPFE is GenericLPFEquidist (Alladi's theorem [9] on minFac distribution of generic integers, also known but not formalized). Both ends of the chain—from PDE to GLPFE via Alladi, and from CCSB to MC via Fourier inversion—are formally proved.

**Window route.**

$$\text{StrongSieveEquidist} \xrightarrow{\text{proved}} \text{NoLongRunsAt} \xrightarrow{\text{proved}} \text{PEDAt} \xrightarrow{\text{open}} \text{CCSB} \xrightarrow{\text{proved}} \text{MC}.$$

StrongSieveEquidist asserts that EM multipliers are equidistributed within sliding windows; NoLongRunsAt and PEDAt are per-prime variants proved by pigeonhole and block-counting respectively (✓ strongSieveEquidist_noLongRunsAt, ✓ noLongRunsAt_ped).

**The genuine frontier.** **SieveTransfer** is the critical open hypothesis: does the equidistribution of minFac residues for generic integers transfer to the specific EM orbit? Everything above SieveTransfer is known mathematics; everything below it is proved. SieveTransfer is where "known but not formalized" meets "genuinely open."

The difficulty: for *generic* $q$-rough integers, minFac residues are equidistributed (by CRT + Mertens)—the death channel gets its fair share of multipliers. But the EM Euclid numbers are not generic: each is determined by the entire walk history. Transferring the generic equidistribution to this specific orbit is the open step.

**Sieve-to-harmonic convergence.** The sieve hierarchy (§36–§39 of Equidist/SelfCorrecting.lean) and the harmonic hierarchy (§30–§35) converge: both produce DecorrelationHypothesis as output. The full chain

$$\text{SieveEquidist} \xrightarrow{\text{proved}} \text{Dec} \xrightarrow{\text{proved}} \text{PED} \xrightarrow[\text{sole gap}]{\text{open}} \text{CCSB} \xrightarrow{\text{proved}} \text{MC}$$

is formalized, with the first two arrows machine-verified (✓ sieve_equidist_implies_decorrelation, ✓ decorrelation_implies_ped). The sieve route achieves SieveEquidist ⇒ Dec via a counting-to-character-sum bridge: SieveEquidistribution produces EMMultCharSumBound with $Q_0 = 0$, meaning multiplier character sums cancel for *all* primes $q$, which is exactly DecorrelationHypothesis. The sole remaining gap on this route is **PEDImpliesComplexCSB** (✓ PEDImpliesComplexCSB): does positive escape density for all primes imply walk character sum cancellation? Any proof of SieveEquidistribution (e.g., from PNT in APs + Alladi's theorem) would immediately yield Dec and PED for free, isolating this single bridge as the only open step.

**DSL: The Sole Remaining Hypothesis** The ensemble averaging framework (Section 5) collapses the entire reduction landscape to a single open statement: the **Deterministic Stability Lemma** (DSL, Property 5.20). DSL asserts that population equidistribution of multiplier residues (a consequence of standard ANT) implies conditional multiplier equidistribution for the standard EM orbit ($n = 2$). The assembly DSL ⇒ CME ⇒ CCSB ⇒ MC is fully machine-verified (✓ full_chain_dsl). DSL is the orbit-transfer principle: it bridges from population-level statistics (which hold for almost all starting points) to the specific orbit.

A weaker variant also suffices:

**Theorem 6.8** (✓ pe_dsl_hitting_implies_mc)**.** $\text{PE} + \text{DSLHitting} \implies \text{MC}$,

where DSLHitting only requires that the walk hits $-1$ for a positive density of starting points, rather than full equidistribution.

**Pairwise Decorrelation and Weak MC** Dead End #125 proved that pairwise cancellation does not imply $k$-wise (XOR counterexample), killing the CCSB+CPD → UPE route. However, *variance bounds only use* $k = 2$: the identity $\mathrm{Var}(\sum_j X_j) = \sum_j \mathrm{Var}(X_j) + 2\sum_{j<k} \mathrm{Cov}(X_j, X_k)$ means pairwise decorrelation suffices for concentration. The formalization proves this revival chain:

**Theorem 6.9** (✓ dead_end_125_pairwise_revival)**.** *PairwiseStepDecorrelation + LinearMeanGrowth + ChebyshevConcentration* $\implies$ *AlmostAllSquarefreeRSD.*

The proved intermediate results include: $\mathrm{Var}[1/\mathrm{genSeq}(n,k)] \le 1/4$ (from genSeq $\ge 2$), the variance decomposition identity, and PSD+IVB ⇒ $\mathrm{Var}[S_K] \le (V+1)K$ (psd_ivb_implies_variance_bound_proved). The Chebyshev bridge is now proved (chebyshev_concentration_proved), and PSD+IVB ⇒ variance bound is proved, leaving exactly two open hypotheses: PSD and LMG.

A further simplification drops PSD entirely. Since $S_K(n) \le K/2$ deterministically (each term $\le 1/2$), a partition argument shows that LMG alone implies a positive density of starting points have divergent reciprocal sums:

**Theorem 6.10** (✓ lmg_implies_positive_density_rsd)**.** LinearMeanGrowth $\implies$ PositiveDensityRSD.

This is a 1-hypothesis route (vs. 2 for density 1), and the hypothesis LMG is strictly weaker than CME—it requires only that the ensemble mean grows linearly, not conditional equidistribution.

**Function Field Analog** Over $\mathbb{F}_p[t]$, the FF-EM sequence has additional structural advantages. The formalization proves (FunctionField/WeakMC.lean, 471 lines, zero sorry):

- **Degree escape** (✓ ffSeq_degree_tendsto_atTop): $\deg(\mathrm{ffSeq}(n)) \to \infty$, unconditional from finiteness + injectivity.
- **Capture count stabilization**: for each degree $d$, the number of degree-$d$ irreducibles captured eventually stabilizes.
- **Pool partition identity** (✓ captureCount_plus_missing): captured + unsieved = total, an exact accounting.
- **FFCaptureExhaustive** $\Leftrightarrow$ **FFMullinConjecture**: the two natural formulations are equivalent.

The pool partition identity gives quantitative control: if the total number of monic irreducibles of degree $\leq D$ is $M$, then among the first $N > M$ terms, at least one has degree $> D$. Dead End #129 (FFLM structurally false—cyclotomic Galois groups) is sidestepped entirely: degree escape uses only finiteness and injectivity, not monodromy.

**What Would Close the Conjecture** The cleanest paths to MC:

1. **Prove DSL** (sole remaining hypothesis): show that the character energy of generalized EM sequences concentrates when averaged over squarefree starting points. This is the weakest known hypothesis that implies MC, and the only one that does so without additional conditions. The assembly DSL $\Rightarrow$ CME $\Rightarrow$ CCSB $\Rightarrow$ MC is fully machine-verified (✓ full_chain_dsl).

2. **Prove CME**: show that the multiplier character sum $\sum_{\substack{n<N \\ w(n)=c}} \chi(m(n))$ is $o(N)$ for each walk position $c$. CME is strictly weaker than CCSB, and CME $\Rightarrow$ CCSB is proved (✓ cme_implies_ccsb). CME asks only about the *conditional* distribution of multipliers given walk state—it does not require controlling the walk character sum itself. This bypasses the $d \geq 3$ barrier entirely.

3. **Prove CCSB directly**: show that no non-trivial character sum can sustain the $\Omega(N)$ bias that permanent avoidance of $-1$ would require. The self-correcting sieve (concentration of EM primes in a residue class is exponentially self-limiting) is the strongest heuristic argument.

4. **Prove a BV-type estimate**: even an averaged bound over $q$ would suffice—for $q \geq Q_0$ it rules out permanent avoidance, and the finitely many $q < Q_0$ are handled by the inductive bootstrap (§3).

5. **Close the orbit chain gap**: show that at each cofinally visited walk position, at least two distinct multiplier classes appear. This would force the orbit chain to expand to the full group.

6. **Prove DH directly**: show that a multiplicative walk on a cyclic group with a generating set of multipliers must hit every element cofinally. This is a combinatorial question about deterministic walks.

7. **Prove SieveTransfer**: show that the EM orbit's minFac distribution matches that of generic integers, at least on average. The cumulative sieve route (§38) reduces this to known number theory (PNT in APs + Alladi's theorem); closing SieveTransfer gives CME (and hence CCSB) via the conditional multiplier equidistribution framework.

8. **Prove BVImpliesMMCSB or PrimeArithLSImpliesMMCSB**: the large sieve route (§41–§65) reduces MC to a transfer hypothesis. Given Bombieri–Vinogradov or the analytic large sieve, the remaining open step is showing that the EM orbit's multipliers receive their fair share of each residue class—in particular, that the death channel is not systematically avoided. This is the same orbit-specificity gap as SieveTransfer, approached from a different mathematical toolkit.

**Does the Walk Hit $-1$?** The irreducible open question is not whether DH holds (cofinal hitting is a convenient sufficient condition) but whether the walk hits $-1$ *at least once* past the sieve gap. The Single Hit Theorem (Theorem 3.5) shows that a single hit at each prime suffices for MC; DH, CCSB, and CME are strategies for producing that hit.

**Evidence for.** Three independent lines of evidence suggest the walk does hit $-1$ (see also Remark 5.22). (1) *The information bottleneck*: $\mathrm{P}_2(n)$ has $\sim 2^n$ bits, but the walk position carries only $O(\log q)$ bits. The smallest prime factor of $\mathrm{P}_2(n) + 1$ depends on the full value, not on its residue mod $q$, so conditioning on walk position constrains almost nothing about the factoring outcome—the conditional and unconditional minFac distributions should agree. (2) *Ensemble evidence*: for almost all squarefree starting points, CME holds (the proved SD $\Rightarrow$ cancellation chain). The standard orbit $n = 2$ has no special arithmetic property that would make it an outlier. DSL is a typicality assertion, not a structural miracle. (3) *Analogy with Artin's conjecture*: Artin's conjecture (that every non-square integer is a primitive root for infinitely many primes) has the same orbit-specificity structure and is believed true; Hooley [7] proved it conditional on GRH. The walk-hitting question is the analogous statement for the EM walk and would follow from an analogous uniformity hypothesis.

**Evidence against.** Two features of the EM sequence give pause. (1) *Cox–van der Poorten* [11]: the "largest factor" variant of the Euclid–Mullin sequence provably misses primes. The EM sequence's completeness is not a soft consequence of the Euclid construction but depends sensitively on the minFac selection rule. This fragility means heuristic arguments ("it should work because Euclid numbers have many factors") are not reliable. (2) *The $d \geq 3$ barrier*: the formalization proves that the most natural route from multiplier escape density to walk character sum cancellation (PED $\Rightarrow$ BRE $\Rightarrow$ CCSB) is *impossible* for character orders $d \geq 3$. This is not evidence against the hit, but it shows that producing one requires mechanisms beyond the simplest equidistribution framework. The CME bypass sidesteps this barrier, but the barrier's existence means any proof must be genuinely subtle.

**Assessment.** We believe the walk does hit $-1$ at every prime, primarily because the self-correcting sieve mechanism provides a concrete dynamical reason (not merely a probabilistic heuristic) for the walk to eventually hit $-1$. The strongest form of this belief: CME should hold because the EM multipliers, conditioned on walk position, have no arithmetic reason to avoid the death channel systematically. But we acknowledge that no existing technique can prove this. The formalization has exhaustively explored all known proof strategies across 134 dead ends: the $d \geq 3$ barrier, the MultCancelToWalkCancel counterexample (Dead End #117), the cofactor identity's failure to escape the Marginal/Joint Barrier (Dead End #115), and the exhaustion of all four DSL proof directions (algebraic identities, cofactor completeness, exponential sums, sum-product theory) collectively show that the proof, when found, will require genuinely new mathematical techniques—likely exploiting the specific arithmetic of the minFac rule on super-exponentially growing squarefree numbers in ways that current analytic number theory does not.

# 7 The Lean Formalization

Having developed the mathematical reduction and identified the structural obstacles, we describe the Lean 4 formalization that certifies these results.

**Codebase Structure** The formalization uses Lean 4 with Mathlib v4.29.0-rc1 across 104 files totaling ∼56,050 lines. The dependency chain is linear, with three leaf modules:

| File | Content | Lines |
|---|---|---|
| *Core sequence and walk* | | |
| Core/Euclid.lean | Constructive Euclid's theorem | 422 |
| Core/Defs.lean | seq, prod, aux, identities | 527 |
| Core/Conjectures.lean | MC, Conjecture A (FALSE), HH | 490 |
| Core/DWH.lean | DivisorWalkHypothesis (leaf) | 547 |
| Core/ResidueWalk.lean | WalkCoverage, residue walk, concrete MC | 603 |
| *Group theory and algebraic framework* | | |
| Group/Core.lean | walkZ, multZ, confinement, SE | 422 |
| Group/Escape.lean | Escape lemmas, 8-element argument | 634 |
| Group/SEInstances.lean | 29 concrete SE instances ($q \leq 157$) | 364 |
| Group/Pumping.lean | Gordon sequenceability [4] (leaf) | 343 |
| Group/QR.lean | QR obstruction ($\leq 1.6\%$) (leaf) | 684 |
| Group/CRT.lean | CRT multiplier invariance, walk recurrence | 160 |
| Group/DepartureGraph.lean | Departure graph, infinite recurrence, safe prime lattice | 641 |
| Group/RotorRouter.lean | Scheduled walk coverage (standalone) | 455 |
| Group/Bridge.lean | EMPR + SE ⇒ MC bridge | 87 |
| *Equidistribution and character sums* | | |
| Equidist/Preamble.lean | PE ⇒ MC, bootstrapping | 234 |
| Equidist/Sieve.lean | Sieve, WHP ⇔ HH, forbidden multiplier, Möbius death | 755 |
| Equidist/SelfAvoidance.lean | Self-avoidance, periodicity | 450 |
| Equidist/CharPRE.lean | Character non-vanishing, PRE ⇔ SE | 807 |
| Equidist/Bootstrap.lean | Inductive bootstrap, DH ⇒ MC, first passage | 694 |
| Equidist/Threshold.lean | Sieve gap, one-prime gap, cofinal pair avoidance | 321 |
| Equidist/CofinalOrbit.lean | Cofinal orbit expansion, quotient walk, cofinal escape | 667 |
| Equidist/OrbitAnalysis.lean | TailSE, sieve reduction, oracle barrier, selectability | 778 |
| Equidist/Fourier.lean | Character sums, Fourier bridge | 1237 |
| Equidist/SelfCorrecting.lean | Decorrelation, BRE, telescoping, kernel | 1163 |
| Equidist/SieveTransfer.lean | Sieve transfer, coprimality, neg-inv involution | 615 |
| Equidist/WalkDecomposition.lean | Quadratic/general walk sum decomposition, escape decorrelation | 863 |
| *CME decomposition and spectral analysis* | | |
| CME/Variants.lean | CME weaker variants (CME_d, CME_avg, CME_subseq, CME_target) | 96 |
| CME/Decomposition.lean | CME = A + B decomposition, EMD ⇒ CME | 355 |
| LargeSieve/Basic.lean | BV, ALS, ArithLS, MMCSB, Farey, GCT chains | 855 |
| LargeSieve/Structural.lean | Coprimality, divisibility, BV decomposition, sieve bridge | 945 |
| LargeSieve/Harmonic.lean | Parseval, Gauss sums, DFT, kernel | 899 |
| LargeSieve/Analytic.lean | Gauss inversion, WeakALS, GCT chain | 1149 |
| LargeSieve/PrimeArithLS.lean | Prime arithmetic large sieve, walk as partial product, dead ends | 561 |
| LargeSieve/Spectral.lean | Walk energy, SVE, Weyl criterion, HOD, VdC | 1071 |
| CME/Reduction.lean | CME definition, CME ⇒ CCSB ⇒ MC, FEB, hierarchy | 627 |

*continued on next page*

| File | Content | Lines |
|---|---|---|
| LargeSieve/WalkAnalysis.lean | VCB, energy increments, fiber decomposition, transition matrix | 1006 |
| *SDDS and independence* | | |
| SDDS/Dynamics.lean | Abstract SDDS framework, factoring rules | 195 |
| SDDS/Bridge.lean | SDDS $\leftrightarrow$ EM bridge, orbit/walk/mult correspondence | 375 |
| SDDS/Reduction.lean | StrongSME $\Rightarrow$ MC via sieve-map equidist. | 126 |
| Transfer/Excursion.lean | Walk excursions, char. sum independence | 461 |
| Transfer/CRTFiber.lean | SE $\Rightarrow$ NAO, CRT independence, death channel | 255 |
| *Population and weak variants* | | |
| Population/WeakMullin.lean | Missing primes, WM $\Rightarrow$ RD, EMBV $\Rightarrow$ MC | 362 |
| Population/WeakErgodicity.lean | Squarefree accumulator, PE+PT+EMDImpliesCME | 160 |
| Population/Proof.lean | MinFacResidueEquidist $\Rightarrow$ PE (analytic) | 187 |
| Population/ReciprocalSum.lean | Reciprocal sum divergence, PSD chain, positive density route | 1260 |
| Population/TransferStrategy.lean | PE + DSL $\Rightarrow$ MC, ensemble concentration | 273 |
| Population/Tauberian.lean | One-sided Tauberian, L-series bounds, prime power stripping | 557 |
| Population/AbelChain.lean | Abel summation chain: $(\log p)/p \to 1/p$ infrastructure | 641 |
| Population/AlladiDensity.lean | Alladi chain scaffolding, WPNT+DSL $\Rightarrow$ MC | 267 |
| *Ensemble framework (new)* | | |
| Ensemble/Structure.lean | Generalized EM: genProd, genSeq, injectivity | 269 |
| Ensemble/EM.lean | Generalized walk/multiplier, bridge to standard EM | 114 |
| Ensemble/CRT.lean | CRT equidistribution, sqfree residue averaging, death density bridge | 864 |
| Ensemble/Decorrelation.lean | CRT-based decorrelation, Markov density bounds | 431 |
| Ensemble/FirstMoment.lean | First moment, parity, SMLB chain, $k$=0/$k$=1/$k$=2 CRT, sieve density | 1450 |
| Ensemble/PT.lean | Variance bounds, joint equidist, CRT chain, SD $\Rightarrow$ cancellation | 1092 |
| Ensemble/WeylChain.lean | Generalized MC, Weyl hitting bridge, cancel_weyl_implies_mc | 834 |
| Ensemble/CRTFreedom.lean | SCRTI + SRE $\Rightarrow$ AEP, CRT bootstrap | 631 |
| Ensemble/BaseCase.lean | JSE base case, tower rule, uniform witness bounds | 377 |
| Ensemble/FiberAutonomy.lean | CRT fiber determines multiplier dynamics, walk readout | 255 |
| *DSL and master reduction (new)* | | |
| Reduction/DSLInfra.lean | Energy evolution, fiber analysis, FEB $\Rightarrow$ CME | 627 |
| Reduction/ShiftedDensity.lean | Sieve density $g(r)$, algebraic properties | 251 |
| Reduction/VisitEquidist.lean | ExcessEnergy = visit deviation, SVE $\leftrightarrow$ VE | 187 |
| Reduction/SelfCorrecting.lean | Lyapunov identity, SCD $\equiv$ SVE, Dead End #120 | 624 |
| Reduction/WeakRecurrence.lean | LinearDrift $\Rightarrow$ MC, VisitGrowth $\Rightarrow$ HH $\Rightarrow$ MC (threshold-free) | 425 |
| Reduction/SMSB.lean | Per-class bad set analysis, Dead End #121 | 459 |
| Reduction/Master.lean | All reduction chains assembled, DSL $\Rightarrow$ MC | 210 |
| Reduction/DSLVariance.lean | Population variance route to DSL, second moment | 365 |
| Transfer/CRTPointwise.lean | OCE = CME, all routes to MC via CRT | 260 |
| Transfer/Substitution.lean | SP = CME, fiber return visits, 4-route witness | 290 |
| Reduction/TailIdentity.lean | Tail energy identities, 4th moment, Chebyshev bridge | 433 |
| Reduction/TailWindow.lean | Window decomposition, variance identity, TWD $\Rightarrow$ MC | 477 |
| Transfer/IntegerDioph.lean | $T$-iteration $T(n)$=$(n-1)\cdot$minFac$(n)$+1, orbit, cofactor | 340 |

*continued on next page*

| File | Content | Lines |
|---|---|---|
| Transfer/SieveConstraint.lean | Prime support $S_n$, sieve exclusion, $P(n)+1 \equiv 1 \bmod S_n$ | 261 |
| *Adelic and profinite framework (new)* | | |
| Adelic/Equidist.lean | Adelic decomposition: CME $\Leftrightarrow$ MWI + MME, Fourier bridge, CPD | 656 |
| Adelic/Profinite.lean | Profinite equidistribution, UPE $\Rightarrow$ CCSB $\Rightarrow$ MC, Weyl criterion | 182 |
| Adelic/UniformConductor.lean | UCE hypothesis, conductor counting, UCE+DSL$\Rightarrow$MC | 301 |
| FunctionField/Analog.lean | FF-EM over $\mathbb{F}_p[t]$, Galois/monodromy, cyclotomic obstruction, Dead Ends #127, #129 | 952 |
| Advanced/Diamonds.lean | $p$-adic geometric perspective, Hecke obstruction, Dead End #128 | 340 |
| Advanced/MarkovSieve.lean | Doeblin/sieve collapse certificates, Artin analogy, Dead Ends confirmed | 538 |
| Advanced/Dobrushin.lean | Dobrushin coefficient = 1, MUB $\neq$ CME, stopping time, Dead End #131 | 704 |
| Advanced/LFunction.lean | $L_{\mathrm{EM}}$ Dirichlet series, self-similar decomposition, Dead Ends #132–#134 | 448 |
| FunctionField/Bootstrap.lean | FF-MC $\Leftarrow$ FFDynamicalHitting, competitor exhaustion, injectivity | 438 |
| FunctionField/SubgroupEscape.lean | SE for large $p$ via Weil contradiction, threshold $(d-1)^2+1$ | 552 |
| FunctionField/CyclicWalkCoverage.lean | Weyl criterion for walks on finite groups, $\mathbb{Z}/4\mathbb{Z}$ counterexample | 549 |
| FunctionField/MultiplierCCSB.lean | 4 routes to FF-MC, population/fiber/selection hierarchy | 763 |
| FunctionField/WeakMC.lean | Degree escape, pool partition, capture exhaustion (Dead End #129 revival) | 471 |
| GaussEM/GaussEMDefs.lean | Gaussian EM over $\mathbb{Z}[i]$: sequence, irreducibility, coprimality | 290 |
| GaussEM/GaussWalkStructure.lean | Gaussian walk: split/inert classification, norm kernel, orbit barrier | 331 |
| *Cross-check infrastructure* | | |
| Meta/Blueprint.lean | LeanArchitect [19] annotations for 20 key theorems | 229 |
| Meta/Registry.lean | Content-addressed registry, `@[publish]`/`@[open_point]` annotations | 189 |
| Meta/DeadEnds.lean | Dead end registry: 134 documented, 13 witnessed, 8 revivable | 220 |
| *Iwaniec–Kowalski infrastructure* | | |
| IK/Ch1.lean | Iwaniec–Kowalski [12] Ch. 1: arithmetic functions | 434 |
| IK/Ch2.lean | Iwaniec–Kowalski Ch. 2: summation formulas | 270 |
| IK/Ch3.lean | Iwaniec–Kowalski Ch. 3: combinatorial sieve | 557 |
| IK/Ch4.lean | Iwaniec–Kowalski Ch. 4: summation formulas | 598 |
| IK/Ch5.lean | Iwaniec–Kowalski Ch. 5: Kloosterman sums | 877 |
| IK/Ch7Foundations.lean | Iwaniec–Kowalski Ch. 7: foundations, norm bounds | 328 |
| IK/Ch7AdditiveLS.lean | Iwaniec–Kowalski Ch. 7: additive large sieve | 989 |
| IK/Ch7MultiplicativeLS.lean | Iwaniec–Kowalski Ch. 7: multiplicative large sieve | 462 |
| IK/Ch7SieveApplications.lean | Iwaniec–Kowalski Ch. 7: sieve applications (prime case) | 949 |
| IK/Ch7SieveCRT.lean | Iwaniec–Kowalski Ch. 7: Linnik, CRT general squarefree | 609 |
| IK/Ch7Hilbert.lean | Iwaniec–Kowalski Ch. 7: Hilbert rescaling, Mittag-Leffler, Gram | 1265 |
| IK/Ch7CesaroChain.lean | Iwaniec–Kowalski Ch. 7: Cesàro convergence, circular ALS chain | 1040 |

## 7.1 Axiom Usage: What's Constructive

The core definitions (seq, prod, aux) and their basic properties (seq_isPrime, seq_injective) are **fully constructive**: they use only propext and Quot.sound (no Classical.choice, no Decidable instances beyond $\mathbb{N}$). Euclid's theorem itself (Core/Euclid.lean) is constructive.

Classical reasoning enters at the reduction level:

- The HH $\Rightarrow$ MC proof uses well-founded induction (strong induction on $\mathbb{N}$), which in Lean 4 is constructive but relies on Classical.choice for the cofinal-implies-hit argument.
- Character theory (orthogonality, Fourier inversion) is inherently classical via open Classical.
- All open hypotheses are stated as def ...: Prop, never as sorry'd theorems. The type-checker guarantees that no proof obligation is silently assumed.

## 7.2 Mathlib Dependencies

The formalization draws on several Mathlib libraries:

- **Group theory**: Subgroup, QuotientGroup, orderOf, cyclic group structure, maximal subgroups (Subgroup.IsCoatom).
- **Number theory**: Nat.minFac, Legendre symbols, quadratic reciprocity, ZMod, Dirichlet characters, Gauss sums.
- **Character theory**: DirichletCharacter.Orthogonality, roots of unity in algebraically closed fields, character bounds, MulChar.sum_eq_zero_of_ne_one.
- **Analysis**: norm_sum_le, complex norms, IsOfFinOrder.norm_eq_one, Fourier analysis on $\mathbb{Z}/n\mathbb{Z}$ (ZMod.dft, discrete Fourier transform).
- **Dirichlet's theorem**: Nat.infinite_setOf_prime_and_eq_mod (primes in arithmetic progressions, via $L$-series).
- **Harmonic analysis**: Parseval's theorem for finite abelian groups, trigonometric exponentials, geometric series identities.

## 7.3 ANT Formalization Status

The sole unformalized input to the master reduction is ANT (§5.1): the standard analytic number theory implying MFRE. The chain is

$$\underbrace{\text{Dirichlet} + \text{Sieve}}_{\text{ANT}} \xrightarrow[\text{open}]{\text{W-I}} \text{WeightedPNTinAP} \xrightarrow[\checkmark]{\text{strip}} \text{PrimeLogSum} \xrightarrow[\checkmark]{\text{Abel}} \text{PrimesEquidist} \xrightarrow[\text{open}]{\text{Alladi}} \text{MFRE} \xrightarrow[\checkmark]{}$$

where "✓" denotes machine-verified arrows and "open" denotes unformalized steps. Three files provide the ANT infrastructure: Population/Tauberian.lean (557 lines, zero sorry) proves the Tauberian and stripping steps; Population/AbelChain.lean (641 lines, zero sorry) proves the full discrete Abel summation chain converting log-weighted prime sums into reciprocal-weighted sums; and Population/AlladiDensity.lean (267 lines, zero sorry) defines intermediate hypotheses for the Alladi chain and proves the master reduction ✓ wpnt_dsl_implies_mc: WeightedPNTinAP + Alladi + CRT + DSL $\Rightarrow$ MC.

**Proved steps.**

- **One-sided Tauberian lemma** (✓ one_sided_tauberian_upper): for nonnegative $b_n \geq 0$, $\sum_{n \leq N} b_n \leq N^\varepsilon \cdot \sum_n b_n/n^\varepsilon$. Elementary proof via $n^\varepsilon \leq N^\varepsilon$. This gives $O(N^\varepsilon)$ partial-sum bounds from Dirichlet series behavior, without requiring the full Wiener–Ikehara theorem.

- **L-series two-sided bounds** (✓ residueClass_tsum_both_bounds): Mathlib's PrimesInAP.lean proves a *lower* bound on $\sum \Lambda(n)\mathbf{1}_{n\equiv a}/n^s$ near $s = 1$ via LSeries_residueClass_lower_bound, but does not export the corresponding upper bound. We extract the identity tsum $=$ $\mathrm{Aux}(a, s) + (\varphi(q))^{-1}/(s-1)$ from Mathlib's proof and derive both bounds.

- **Prime power stripping** (✓ prime_power_stripping_proved): WeightedPNTinAP $\Rightarrow$ PrimeLogSumEquidist. The von Mangoldt function $\Lambda$ counts prime powers $p^k$ with weight $\log p$; the contribution from $k \geq 2$ is uniformly bounded by $\sum_p 2 \log p/p^2 < \infty$. This 250-line proof strips the higher prime powers and converts the $\Lambda$-weighted sum into a $(\log p)/p$ sum over primes only.

- **Abel summation chain** (✓ prime_log_to_reciprocal_proved, 641 lines): PrimeLogSumEquidist $\Rightarrow$ PrimesEquidistributedInAP. Discrete Abel summation (summation by parts) converts the log-weighted prime sum $\sum(\log p)/p$ into the reciprocal-weighted sum $\sum 1/p$. The proof includes derivative identities $(\log\log t)' = 1/(t\log t)$ and $(-1/\log t)' = 1/(t(\log t)^2)$; integral evaluations via FTC; the sandwich bound $|\sum_{k=2}^{m-1}(\log(k+1) - \log k)/\log(k+1) - (\log\log m - \log\log 2)| \leq 1/(\log 2)^2$; and the discrete Fubini step (double-sum reindexing).

- **Full composed chain** (✓ wpnt_implies_primes_equidist_proved): WeightedPNTinAP $\Rightarrow$ PrimesEquidistribute composing prime power stripping with discrete Abel summation.

- **Dirichlet's theorem** (✓ dirichlet_primes_in_ap): imported directly from Mathlib's Nat.infinite_setOf_prime_and_eq_mod.

**Remaining gaps.** Mathlib v4.29.0 already provides ∼92% of the required infrastructure: qualitative Dirichlet (via $L$-functions and non-vanishing on $\mathrm{Re}(s) \geq 1$), Abel summation (AbelSummation.lean), Chebyshev bounds, Dirichlet character orthogonality, and the von Mangoldt function. Two gaps remain:

1. **Wiener–Ikehara bridge** (sole blocker, ∼300–500 lines): convert $\sum \Lambda(n)\mathbf{1}_{n\equiv a}/n^{1+\varepsilon} = (\varphi(q))^{-1}/\varepsilon + O(1)$ into the partial-sum asymptotic $\sum_{n\leq x}\Lambda(n)\mathbf{1}_{n\equiv a}/n = \log x/\varphi(q) + O(1)$. Because $\Lambda \geq 0$, a one-sided monotone argument suffices: the one-sided Tauberian lemma (proved above) already gives $O(N^\varepsilon)$ bounds; what remains is the *asymptotic*, which requires a quantitative version of the abelian Tauberian theorem. As of March 2026, no external Lean 4 project provides a usable Wiener–Ikehara theorem: the PNT+ project (Kontorovich–Tao et al.) includes W-I in its blueprint but has not implemented it in Lean, and the Gauss project (Math, Inc.) uses a different method (zero-free regions). If a W-I formalization lands in Mathlib, the gap closes immediately via the L-series identity above.

2. **Alladi chain** (∼1,000–1,400 lines remaining): Alladi's formula [9] for the density of $\{m : \mathrm{minFac}(m) = p\}$ combined with CRT sieving gives PrimesEquidistInAP $\Rightarrow$ MFRE. The reduction scaffolding is now formalized in Population/AlladiDensity.lean (267 lines, zero sorry), which decomposes the chain into two precisely stated open hypotheses: PrimesEquidistImpliesRoughLPF (Alladi density + weight independence, ∼600–800 lines) and RoughLPFImpliesMFRE (CRT sieve transfer from generic $q$-rough integers to shifted squarefree integers, ∼400–600 lines). The master reduction ✓ wpnt_dsl_implies_mc composes these with the proved ANT chain and DSL to give MC. The sieve density infrastructure already exists (Reduction/ShiftedDensity.lean). The key observation is that the Alladi weight $h(p) = (1/p) \cdot \prod_{q<r<p}(1 - 1/r)$ depends on $p$ only through $|p|$, not through $p \bmod q$, so weighted Dirichlet equidistribution transfers to minFac residues. No prior formalization of Alladi's density formula or the Buchstab identity exists in any proof assistant.

We estimate ∼1,300–2,300 lines to close the full chain. The Abel summation step is complete (Population/AbelChain.lean), the Alladi chain scaffolding with master reduction is formalized (Population/AlladiDensity.lean), and the Wiener–Ikehara bridge and Alladi density content are the two remaining components. Formalizing ANT is feasible future work but does not affect the paper's contribution, since the reduction DSL $\Rightarrow$ MC is the novel content.

| | |
|---|---|
| Lines of Lean code | ∼54,200 |
| Files | 103 |
| Theorems/lemmas | ∼1,850 |
| Definitions | ∼740 |
| sorry occurrences | **0** |
| Open hypotheses (stated as def) | ∼50 |
| Mathlib version | v4.29.0-rc1 |

## 7.4 Summary of Formally Verified Results

| Result | Status | Lean identifier |
|---|---|---|
| *Sequence foundations* | | |
| Every $\mathrm{em}_2(n)$ is prime | Proved | seq_isPrime |
| No prime repeats | Proved | seq_injective |
| *Main reductions to MC* | | |
| **DSL** ⇒ **MC** (sole hypothesis, via ensemble) | **Proved** | full_chain_dsl |
| **SHH** ⇒ **MC** (Single Hit Theorem) | Proved | single_hit_implies_mc |
| **DH** ⇒ **MC** (cofinal hitting route) | Proved | dynamical_hitting_implies_mullin |
| **CCSB** ⇒ **MC** (single hypothesis) | Proved | complex_csb_mc' |
| **CME** ⇒ **MC** (sharpest, all $d$) | Proved | cme_implies_mc |
| PE + DSL ⇒ MC | Proved | pe_dsl_implies_mc |
| PE + DSLHitting ⇒ MC | Proved | pe_dsl_hitting_implies_mc |
| PE ⇒ MC | Proved | pe_implies_mullin |
| HH ⇒ MC | Proved | hh_implies_mullin |
| SE + MH ⇒ MC | Proved | se_mixing_implies_mullin |
| **WE** ⇒ **MC** (single Prop) | Proved | walk_equidist_mc |
| *Inductive bootstrap* | | |
| PrimeResidueEscape (elementary) | Proved | prime_residue_escape |
| MC($<p$) + PRE ⇒ SE($p$) | Proved | mcBelow_pre_implies_se |
| $q$-roughness from MC($<q$) | Proved | mcBelow_implies_seq_ge |
| One-prime gap | Proved | mcBelow_cofinal_hit_implies_mc_at |
| mcBelow 11 | Proved | concrete_mcBelow_11 |
| *Algebraic framework* | | |

*continued on next page*

| Result | Status | Lean identifier |
|---|---|---|
| Confinement Theorem | Proved | confinement_forward/reverse |
| PRE ⇔ SE | Proved | pre_iff_se |
| SE ⇔ character detection | Proved | se_iff_char_detection |
| Maximal subgroup reduction | Proved | se_of_maximal_escape |
| WHP ⇔ HH | Proved | whp_iff_hh |
| SE density argument (CRT + QR) | Proved | se_qr_obstruction |
| *Character sum chain* | | |
| Fourier bridge: CCSB ⇒ hit count lb | Proved | complex_csb_implies_hit_count_lb_proved |
| Decorrelation ⇒ PED | Proved | decorrelation_implies_ped |
| NoLongRuns($L$) ⇒ PED | Proved | noLongRuns_implies_ped |
| BRE ⇒ PEDImpliesCSB | Proved | block_rotation_implies_ped_csb |
| CME ⇒ CCSB (all $d$, bypasses BRE) | Proved | cme_implies_ccsb |
| CME ⇒ MC | Proved | cme_implies_mc |
| Walk char recurrence ($\mathbb{C}$-valued) | Proved | char_walk_recurrence |
| Telescoping identity | Proved | walk_telescope_identity |
| Telescoping norm $\leq 2$ | Proved | walk_telescope_norm_bound |
| Shift-one autocorrelation | Proved | walk_shift_one_correlation |
| Order-2 sign-flip chain | Proved | order2_noLongRuns_mc |
| *Walk dynamics* | | |
| Walk–divisibility bridge | Proved | walkZ_eq_neg_one_iff |
| Products strictly monotone | Proved | prod_strictMono |
| Fundamental trichotomy | Proved | avoidance_contradicts_se_mixing |
| Self-avoidance dichotomy | Proved | self_avoidance_dichotomy |
| Scheduled walk coverage | Proved | scheduled_walk_covers_all |
| *Selectability analysis* | | |
| Divisor freshness | Proved | divisor_not_yet_in_seq |
| Passed-over persistence | Proved | passed_over_persists |

*continued on next page*

| Result | Status | Lean identifier |
|---|---|---|
| Selectability extinction | Proved | selectability_extinguished |
| MC ⇒ ¬InfinitelySelectable | Proved | mc_implies_not_infinitely_selectable |
| DH ⇒ InfinitelySelectable | Proved | dh_implies_infinitely_selectable |
| *Sieve and orbit analysis* | | |
| EMFE ⇔ TailSE | Proved | emfe_iff_tail_se_at |
| TailSE ⇒ CofinalEscape ⇒ QuotientDH | Proved | tail_se_gives_sub_dh |
| Dirichlet: ∞ primes per residue class | Proved | dirichlet_residues_independent |
| Minimality sieve + coupling | Proved | minimality_sieve |
| StrongSieveEquidist ⇒ NoLongRunsAt | Proved | strongSieveEquidist_noLongRunsAt |
| NoLongRunsAt ⇒ PEDAt | Proved | noLongRunsAt_ped |
| DPED ⇒ PED | Proved | dped_implies_ped |
| PDE + sieve chain ⇒ MC | Proved | primeDensity_chain_mc |
| GLPFE + SieveTransfer ⇒ MC | Proved | genericLPF_chain_mc |
| SieveEquidist ⇒ Dec | Proved | sieve_equidist_implies_decorrelation |
| SieveEquidist ⇒ PED | Proved | sieve_equidist_implies_ped |
| *Ensemble and DSL framework* | | |
| Generalized EM: genProd, genSeq | Proved | genProd_two_eq_prod |
| genSeq injective | Proved | genSeq_injective |
| Tail identification: $\mathrm{P}_{\mathrm{P}_s(M)}(k) = \mathrm{P}_s(M+k)$ | Proved | genProd_restart |
| $n \mid \mathrm{genProd}(n,k)$ | Proved | start_dvd_genProd |
| $\mathrm{P}_2(n)$ squarefree | Proved | prod_squarefree |
| Buchstab weight $\kappa(2) = 2/3$ | Proved | buchstabWeight_two |
| FM + VB ⇒ RSD | Proved | first_moment_variance_implies_rsd |
| CharConcentration ⇒ Cancellation | Proved | char_concentration_implies_cancellation |
| FEB ⇒ CME (fiber energy) | Proved | feb_implies_cme |

*continued on next page*

| Result | Status | Lean identifier |
|---|---|---|
| Cross term = sum of fiber cross terms | Proved | total_cross_term_eq_sum_fiber |
| $\|\chi(u)\| = 1$ for group chars | Proved | char_value_norm_one |
| Energy $= N + 2\sum$ cross terms | Proved | char_sum_energy_eq_N_plus_cross |
| $o(N)$ cross terms $\Rightarrow$ linear energy | Proved | cross_term_controls_growth |
| ExcessEnergy = visit deviation | Proved | excessEnergy_eq_visit_deviation |
| SVE $\Leftrightarrow$ VE | Proved | sve_iff_ve |
| Lyapunov one-step identity | Proved | lyapunov_one_step |
| Lyapunov telescope: $L(N) = 2R(N) + \text{linear}$ | Proved | lyapunov_telescope |
| Visit deviations sum to zero | Proved | visitDeviation_sum_zero |
| SCD $\Rightarrow$ VE $\Rightarrow$ MC | Proved | scd_implies_ve |
| Doubly stochastic transitions | Proved | group_walk_doubly_stochastic |
| Zero expected drift (uniform multiplier) | Proved | uniform_multiplier_zero_drift |
| SVE $\Rightarrow$ SCD above threshold (equivalence) | Proved | sve_implies_scd_above_threshold |
| LinearDrift $\Rightarrow$ MC (one-sided upper suffices) | Proved | linearDrift_implies_mc |
| VisitGrowth $\Rightarrow$ HH $\Rightarrow$ MC (threshold-free) | Proved | visitGrowth_implies_mc |
| Cumulative drift free lower bound | Proved | cumulativeDrift_lower_bound |
| One-sided upper drift $\Rightarrow$ MC | Proved | upper_drift_bound_implies_mc |
| Per-class bad set partition identity | Proved | badVisitsInClass_card_sum_eq |
| Pigeonhole: some class small bad set | Proved | exists_class_small_bad_set |
| Population energy $\geq 0$ | Proved | populationCharEnergy_nonneg |
| Population energy = ensemble avg | Proved | populationCharEnergy_eq_ensembleAvg |
| Cross-term pair symmetry | Proved | crossTermPair_comm |
| CSVB $\Rightarrow$ SecondMomentBound | Proved | charSumVarianceBound_implies_secondMomentBound |

*continued on next page*

| Result | Status | Lean identifier |
|---|---|---|
| SD ⇒ PairwiseCrossTermVanishing | Proved | stepDecorrelation_implies_pairwiseVanishing |
| Variance chain from bridges | Proved | variance_chain_from_bridges |
| EnsembleConcentration ⇒ AlmostAllSqfreeEqd | Proved | ensemble_concentration_implies_eqd |
| OCE = CME (definitional, rfl) | Proved | oce_eq_cme |
| OCE ⇒ MC | Proved | oce_implies_mc |
| PCE + CRT bridge ⇒ MC | Proved | pce_bridge_implies_mc |
| DSL subsumes CRT bridge | Proved | dsl_implies_crt_bridge |
| All three routes ⇒ MC | Proved | all_routes_to_mc |
| SE ⇒ NAO | Proved | se_implies_nao |
| Full CRT chain ⇒ cancellation | Proved | full_crt_chain_implies_cancellation |
| WeylHittingBridge | Proved | weyl_hitting_bridge_proved |
| PerChiCancellationBridge | Proved | per_chi_cancellation_bridge_proved |
| Walk cancellation ($n$=2) ⇒ MC | Proved | cancel_weyl_implies_mc |
| JSE + MultCancelToWalkCancel ⇒ MC | Proved | jse_transfer_implies_mc |
| SD ⇒ a.a. char sum cancellation | Proved | sd_implies_cancellation |
| 4-hypothesis master (SRE+CRT+Bridge+Decorr) | Proved | ensemble_pt_master_simplified |
| GenHittingImpliesGenMC | Proved | gen_hitting_implies_gen_mc_proved |
| DecorrelationImpliesVariance | Proved | decorrelation_implies_variance_proved |
| CharVarianceImpliesConcentration | Proved | char_variance_implies_concentration_proved |
| EnsembleMultEquidistImpliesCharMeanZero | Proved | ensemble_mult_equidist_char_mean_zero |
| JSE base case (tower rule) | Proved | jse_base_case |
| PSD+IVB ⇒ variance $\leq (V+1)K$ | Proved | psd_ivb_implies_variance_bound_proved |
| Individual variance $\leq 1/4$ (genSeq $\geq$ 2) | Proved | individual_variance_quarter |

*continued on next page*

| Result | Status | Lean identifier |
|---|---|---|
| Variance = double sum of covariances | Proved | variance_eq_double_sum_cov |
| Dead End #125 pairwise revival landscape | Proved | dead_end_125_pairwise_revival |
| $S_K(n) \leq K/2$ (deterministic, genSeq $\geq 2$) | Proved | recipPartialSum_le_half_K |
| LMG $\Rightarrow$ PositiveDensityRSD (1 hypothesis) | Proved | lmg_implies_positive_density_rsd |
| Positive density landscape (5-clause) | Proved | positive_density_landscape |
| Ensemble average linearity ($\mathbb{E}[\sum] = \sum \mathbb{E}$) | Proved | ensembleAvg_sum_range |
| FMS $\Rightarrow$ LMG (1 hypothesis, full chain) | Proved | first_moment_step_implies_lmg |
| FMS $\Rightarrow$ PositiveDensityRSD (composition) | Proved | first_moment_step_implies_positive_density_rsd |
| Weak MC landscape (3-clause) | Proved | weak_mc_landscape |
| $\kappa_3 = 1/3$ (explicit Buchstab constant) | Proved | kappaPartial_three |
| genProd$(n,k)$ even for $k \geq 1$ (parity) | Proved | genProd_even_of_pos |
| genProd$(n,k)$+1 odd for $k \geq 1$ | Proved | genProd_succ_odd |
| genSeq$(n,k) \geq 3$ for $k \geq 1$ (unconditional) | Proved | genSeq_ge_three |
| $\mathbb{E}[1/\text{genSeq}(\cdot,0)] \geq 1/4$ (unconditional) | Proved | ensembleAvg_k0_ge_quarter |
| SMLB $\Rightarrow$ LMG $\Rightarrow$ PositiveDensityRSD | Proved | smlb_implies_positive_density_rsd |
| FMS$(\kappa) \Rightarrow \kappa \geq 1/4$ | Proved | fms_kappa_ge_quarter |
| genSeq$(n,1) = 3$ for $n \equiv 1 \bmod 6$ sqfree | Proved | genSeq_one_of_mod6 |
| Parity + SMLB landscape (4-clause) | Proved | parity_smlb_landscape |
| genProd$(n,2) = 6n$ for $n \equiv 1 \bmod 6$ | Proved | genProd_two_of_mod6 |
| genSeq$(n,2) = 5$ for $n \equiv 19 \bmod 30$ | Proved | genSeq_two_of_mod30 |
| PartialSMLB $\Rightarrow$ mean lower bound | Proved | partial_smlb_implies_mean_lower_bound |
| PartialSMLB$(1/4,0)$ unconditional | Proved | partial_smlb_zero_unconditional |
| Mod6DensityLB $\Rightarrow$ SMLB at $k$=1 | Proved | mod6_density_implies_smlb_k1 |

*continued on next page*

| Result | Status | Lean identifier |
|---|---|---|
| Mod6DensityLB proved (sieve: $d^2 \equiv 1 \bmod 6$) | Proved | mod6_density_lb_proved |
| genSeq = 3 when genProd $\equiv 2 \bmod 3$ | Proved | genSeq_eq_three_of_genProd_mod3 |
| $\mathbb{E}[1/\text{genSeq}] \geq$ mod-3 density/3 | Proved | ensembleAvg_ge_mod3_density |
| AccumMod3LB $\Rightarrow$ SMLB $\Rightarrow$ PRSD | Proved | accum_mod3_implies_positive_density_rsd |
| genSeq $\leq q$ on death fiber (prime $q \mid$ genProd+1) | Proved | genSeq_le_of_genProd_neg_one |
| $\mathbb{E}[1/\text{genSeq}] \geq$ death density/$q$ (all $q \geq 3$) | Proved | ensembleAvg_ge_death_density |
| DeathDensityLB$(q, c) \Rightarrow$ SMLB $\Rightarrow$ PRSD | Proved | death_density_implies_prsd |
| AccumMod3LB $\Leftrightarrow$ DeathDensityLB$(3, c)$ | Proved | accumMod3LB_iff_deathDensity3 |
| EWE landscape extended (4-route conjunction) | Proved | ewe_landscape_extended |
| sqfreeCount inclusion-exclusion $(4, 9, 36)$ | Proved | sqfreeCount_plus_fourth_ninth |
| Non-sf mod-6 count $\leq X/24 + \sqrt{X}$ | Proved | nonsf_mod6_count_bound |
| Telescoping $\sum 1/d^2 \leq 1/(K-1)$ | Proved | sum_inv_sq_le_telescoping |
| CRT fiber determines genSeq | Proved | crt_fiber_determines_genSeq |
| CRT fiber propagates across steps | Proved | crt_fiber_propagates |
| Walk readout from multipliers | Proved | walk_readout_from_multipliers |
| Walk death $\Leftrightarrow$ fiber condition | Proved | walk_death_is_fiber_condition |
| Cofactor identity: $w(n)+1 = m(n) \cdot \text{cof}(n)$ | Proved | shifted_walk_eq_mult_mul_cof |
| Hit $\Leftrightarrow$ cofZ = 0 | Proved | walkZ_eq_neg_one_iff_cofZ_zero |
| SP = CME (definitional, simp) | Proved | sp_eq_cme |
| SP $\Rightarrow$ MC | Proved | substitution_principle_implies_mc |
| All 4 routes with SP $\Rightarrow$ MC | Proved | all_routes_to_mc_with_sp |
| Fiber return visit injectivity | Proved | return_visit_mult_injective |

*continued on next page*

| Result | Status | Lean identifier |
|---|---|---|
| Fiber return visit coprimality | Proved | return_visit_mult_coprime |
| SP structural summary (4-tuple) | Proved | sp_structural_summary |
| Tail energy = standard EM tail | Proved | genSeqCharEnergy_standard_tail |
| SMSB ⇒ Chebyshev density bound | Proved | second_moment_squared_implies_chebyshev |
| FourPointPCV chain ⇒ CDB | Proved | four_point_pcv_chain |
| Window = tail identity | Proved | windowCharSum_eq_genSeqCharPartialSum |
| Variance identity (diag + cross) | Proved | norm_sq_sum_eq_diag_plus_cross |
| Total sum = sum of window sums | Proved | charSum_eq_window_sum |
| Total energy = diag + cross | Proved | charEnergy_window_decomp |
| Diagonal energy $\leq J \cdot K^2$ | Proved | diag_energy_le |
| TWD ⇒ MC (via CCSB bridge) | Proved | twd_implies_mc_from_bridge |
| *Adelic and profinite framework* | | |
| CME ⇔ AdelicEquidist (full equivalence) | Proved | cme_iff_adelic |
| MWI + MME ⇒ CME | Proved | mwi_mme_implies_cme |
| CME ⇒ MME (fiber decomposition) | Proved | cme_implies_mme |
| AdelicEquidist ⇒ MC | Proved | adelic_implies_mc |
| UPE ⇒ CCSB (k=1 specialization) | Proved | uniform_profinite_implies_ccsb |
| UPE ⇒ MC | Proved | uniform_profinite_implies_mc |
| UPE ⇒ CPD (k=2 specialization) | Proved | uniform_profinite_implies_cpd |
| CRTFiber + MME ⇒ MWI (Fourier inversion) | Proved | crt_fiber_implies_mwi_proved |
| CRTFiber + MME ⇒ CME | Proved | crt_fiber_mme_implies_cme |
| MME ⇔ walk autocorrelation | Proved | mme_iff_walk_autocorrelation |
| CCSB ∧ MME + MWI ⇒ CME | Proved | ccsb_mme_landscape |

*continued on next page*

| Result | Status | Lean identifier |
|---|---|---|
| Adelic landscape (5-route conjunction) | Proved | adelic_landscape |
| *Uniform Conductor Equidistribution* | | |
| UCE + DSL ⇒ MC (via Alladi chain) | Proved | uce_dsl_implies_mc |
| UCEImpliesCME ⇒ MC | Proved | uce_cme_implies_mc |
| $\prod(n)$ coprime to $q \notin$ seq | Proved | prod_coprime_of_not_in_seq |
| UCE landscape (3-clause conjunction) | Proved | uce_landscape |
| *Function field analog* | | |
| FF-EM coprimality cascade | Proved | coprimality_cascade |
| FF-EM landscape (Weil ⇒ PE, coprimality) | Proved | ff_analog_landscape |
| Dead End #127: Weil does not close FF-DSL | Documented | WeilDoesNotImplyFFDSL |
| FF-EM Galois group (monodromy framework) | Defined | ffGaloisGroup |
| FF-EM degree strictly monotone | Proved | ffProd_natDegree_strict_mono |
| deg(ffProd($n$)+1) = deg(ffProd($n$)) | Proved | ffProdPlusOne_natDegree |
| FF-EM monodromy landscape | Proved | ff_monodromy_landscape |
| Dead End #129: FFLM structurally false (cyclotomic) | Proved | ff_cyclotomic_dead_end |
| FFDH ⇒ FF-MC (competitor exhaustion) | Proved | ff_dh_implies_ffmc |
| FF-EM sequence injective | Proved | ffSeq_injective_proved |
| Competitor capture (degree finiteness) | Proved | ff_element_capture |
| Weil ⇒ FF-SE for $p \geq (d-1)^2+1$ | Proved | weil_implies_ff_se |
| FF-SE unconditional for $d = 1$ | Proved | ff_se_degree_one |
| Weil arithmetic contradiction | Proved | weil_arithmetic_contradiction |
| Walk char cancel ⇒ coverage (Weyl) | Proved | walk_cancel_implies_covers |
| $\mathbb{Z}/4\mathbb{Z}$ counterexample (generation ≠ coverage) | Proved | alternating_walk_misses_two |
| Weil ⇒ population multiplier CCSB | Proved | weil_implies_population_mult_ccsb |
| Selection bias chain (population → orbit) | Proved | selection_bias_chain |
| Dead End #130: SE ⇏ DH (selection bias) | Documented | se_does_not_imply_dh |

*continued on next page*

| Result | Status | Lean identifier |
|---|---|---|
| FF degree escape ($\deg(\mathrm{ffSeq}(n)) \to \infty$) | Proved | ffSeq_degree_tendsto_atTop |
| FF capture count stabilizes | Proved | captureCount_eventually_constant |
| FF pool partition (captured + unsieved = total) | Proved | captureCount_plus_missing |
| FF pool depletion ⇒ no future captures | Proved | pool_depletion |
| FFCaptureExhaustive ⇔ FFMullinConjecture | Proved | captureExhaustive_iff_ffmc |
| FF weak MC landscape (6-clause conjunction) | Proved | ff_weak_mc_landscape |
| *p-adic geometric perspective* | | |
| $p$-adic valuation monotone | Proved | emPadicVal_mono |
| Slope sequence positive | Proved | emSlope_pos |
| Diamonds perspective landscape | Proved | diamonds_perspective_landscape |
| Dead End #128: $p$-adic geometry (technique mismatch) | Documented | padicGeometryDeadEnd |
| *Markov chain / sieve synthesis* | | |
| Doeblin convergence = CME (collapse) | Proved | doeblin_eq_cme |
| Sieve orbit control = CCSB (collapse) | Proved | sieve_orbit_control_eq_ccsb |
| Spectral gap ⇒ CME | Proved | spectral_gap_implies_doeblin |
| Quantitative DSL ⇒ DSL | Proved | qdsl_implies_dsl |
| $\mathrm{minFac}(nm) = \min(\mathrm{minFac}(n), \mathrm{minFac}(m))$ | Proved | minFac_mul_eq_min |
| 7-route landscape | Proved | markov_sieve_landscape |
| *Dobrushin coefficient / stopping time* | | |
| CME ⇒ MUB (strictly weaker) | Proved | cme_implies_mub |
| Dobrushin coefficient = 1 (deterministic) | Proved | dobrushin_coefficient_one |
| Dead End #131: Dobrushin inapplicable | Documented | dead_end_131_witness |
| *$L_{\mathrm{EM}}$ Dirichlet series* | | |
| $\sum 1/\mathrm{prod}(n)$ converges (geometric comparison) | Proved | accum_reciprocal_summable |
| Self-similar head + tail decomposition | Proved | em_self_similar_decomposition |
| $p^a \neq q^b$ for distinct primes (FTA) | Proved | prime_pow_ne_prime_pow |

*continued on next page*

| Result | Status | Lean identifier |
|---|---|---|
| $\log p/\log q$ irrational for distinct primes | Proved | log_ratio_irrational |
| $L_{\mathrm{EM}}$ landscape (6-clause conjunction) | Proved | em_lfunction_landscape |
| Dead End #132: $L$-function factorization circular | Documented | dead_end_132_witness |
| Dead End #133: self-similar FE framework mismatch | Documented | dead_end_133_witness |
| Dead End #134: no Tauberian lever for $L_{\mathrm{EM}}$ | Documented | tauberian_lever_absent_witness |
| Dead End #135: number field extensions invisible | Documented | dead_end_135_certificate |
| Dead end registry (134 dead ends, 13 witnessed, 8 revivable) | Proved | dead_end_registry |
| *Integer-level $T$-iteration* | | |
| $T$-orbit = shifted accumulators | Proved | emIterationT_iterate_eq |
| $T$-orbit strictly monotone | Proved | emIterationT_orbit_strictMono |
| New prime factor at each step | Proved | T_orbit_new_prime_factor |
| GCD of consecutive orbit elements | Proved | T_orbit_consecutive_gcd_dvd |
| Integer quadratic cofactor identity | Proved | prod_succ_add_one_cofactor |
| *Sieve constraint infrastructure* | | |
| $\lvert S_n\rvert = n{+}1$ (support cardinality) | Proved | emSupport_card |
| $P(n){+}1 \equiv 1 \bmod p$ for $p \in S_n$ | Proved | prod_succ_mod_emSupport |
| $\mathrm{em}_2(n{+}1) \notin S_n$ (boundary) | Proved | seq_succ_not_mem_emSupport |
| $S_n \subsetneq S_{n+1}$ (strict monotonicity) | Proved | emSupport_ssubset |
| genSupport: exclusion, growth, cardinality | Proved | genSupport_not_dvd_succ |
| *Large sieve route* | | |
| MultiModularCSB $\Rightarrow$ MC | Proved | mmcsb_implies_mc |
| BV chain $\Rightarrow$ MC | Proved | bv_chain_mc |
| ArithLS chain $\Rightarrow$ MC | Proved | arith_ls_chain_mc |
| ALS chain $\Rightarrow$ MC | Proved | als_prime_arith_ls_chain_mc |
| **WeakALS** (§58) | **Proved** | weak_als_from_card_bound |

*continued on next page*

| Result | Status | Lean identifier |
|---|---|---|
| Gauss sum inversion (§57) | Proved | char_sum_to_exp_sum |
| **ALS ⇒ PrimeArithLS** (§65) | **Proved** | als_implies_prime_arith_ls |
| Hilbert chain ⇒ ALS | Proved | hilbert_chain_als |
| HilbertInequality1 ⇒ HilbertInequality (rescaling) | Proved | hilbert_rescale |
| MittagLefflerCsc (Mittag-Leffler for csc) | Proved | mittag_leffler_csc_proved |
| CscBilinearBound ⇒ GramOffDiag | Proved | csc_bilinear_implies_gram_offdiag |
| CrossRCesaroConvergence | Proved | cross_r_cesaro_convergence_proved |
| GramOffDiag ⇒ ALS | Proved | gram_offdiag_bilinear_implies_als |
| Refined Gram off-diagonal bound | Proved | gramMatrix_offdiag_bound_dist |
| Packing bound (pigeonhole) | Proved | round_sep_card_le |
| Jordan's inequality (§56) | Proved | sin_pi_ge_two_mul |
| Geometric sum bound (§56) | Proved | norm_eAN_geom_sum_le_inv |
| Parseval for ZMod.dft (§53) | Proved | zmod_dft_parseval |
| Gauss sum norm $\|\tau\|^2 = p$ (§54) | Proved | gaussSum_norm_sq_eq_prime |
| Walk autocorrelation identities (§53) | Proved | walkAutocorrelation_* |
| Character Parseval (§60) | Proved | char_parseval_units |
| All 8 GCT internal lemmas (§56–§62) | Proved | gct_nontrivial_char_sum_le |
| *Open hypotheses — live targets* | | |
| **DeterministicStabilityLemma** (sole hypothesis) | **Open** | DeterministicStabilityLemma |
| **DSLHitting** (weaker variant) | **Open** | DSLHitting |
| **SingleHitHypothesis** (weakest sufficient) | **Open** | SingleHitHypothesis |
| **DynamicalHitting** | **Open** | DynamicalHitting |
| **ComplexCharSumBound** | **Open** | ComplexCharSumBound |
| **MultiModularCSB** | **Open** | MultiModularCSB |
| DecorrelationHypothesis | **Open** | DecorrelationHypothesis |

*continued on next page*

| Result | Status | Lean identifier |
|---|---|---|
| PositiveEscapeDensity | **Open** | PositiveEscapeDensity |
| **PEDImpliesComplexCSB** (sole sieve-route gap) | **Open** | PEDImpliesComplexCSB |
| NoLongRuns($L$) | **Open** | NoLongRuns |
| SieveEquidistribution | **Open** | SieveEquidistribution |
| MertensEscape | **Open** | MertensEscape |
| SieveAmplification | **Open** | SieveAmplification |
| **SieveTransfer** (genuine frontier) | **Open** | SieveTransfer |
| StrongSieveEquidist | **Open** | StrongSieveEquidist |
| DistributionalPED | **Open** | DistributionalPED |
| **BVImpliesMMCSB** (genuine frontier) | **Open** | BVImpliesMMCSB |
| GaussConductorTransfer (all lemmas proved) | **Open** | GaussConductorTransfer |
| PrimeArithLSImpliesMMCSB | **Open** | PrimeArithLSImpliesMMCSB |
| HilbertInequality (IK Lemma 7.8, $\delta$-separated) | **Open** | HilbertInequality |
| HilbertInequality1 (1-separated core) | **Open** | HilbertInequality1 |
| HilbertCscBilinearBridge | **Open** | HilbertCscBilinearBridge |
| EnsembleConcentration | **Open** | EnsembleConcentration |
| RecipSumConcentration | **Open** | RecipSumConcentration |
| PairwiseStepDecorrelation (covariance $\to 0$) | **Open** | PairwiseStepDecorrelation |
| EnsembleMeanDivergence | **Open** | EnsembleMeanDivergence |
| LinearMeanGrowth ($\mathbb{E}[S_K] \geq \kappa K$) | **Open** | LinearMeanGrowth |
| ChebyshevConcentration (Chebyshev bridge) | **Open** | ChebyshevConcentration |
| CharSumVarianceBound | **Open** | CharSumVarianceBound |
| PopulationEquidist | **Open** | PopulationEquidist |
| PopulationTransfer | **Open** | PopulationTransfer |
| EMDImpliesCME | **Open** | EMDImpliesCME |
| JointStepEquidist (ensemble route gap) | **Open** | JointStepEquidist |
| MultCancelToWalkCancel ($\equiv$ CCSB, Dead End #117) | **Open** | MultCancelToWalkCancel |

*continued on next page*

| Result | Status | Lean identifier |
|---|---|---|
| PairwiseVanishingImpliesSMB (variance route) | **Open** | PairwiseVanishingImpliesSMB |
| SMBImpliesDSL (second moment $\Rightarrow$ DSL) | **Open** | SMBImpliesDSL |
| VarianceChainImpliesDSL (full variance chain) | **Open** | VarianceChainImpliesDSL |
| MFREConditional (conditional minFac equidist, $O(1/q^2)$) | **Open** | MFREConditional |
| EnsembleSelectionLemma (orbit-population for MFRE) | **Open** | EnsembleSelectionLemma |
| MFRECondImpliesSMLB (MFRE + Selection $\Rightarrow$ SMLB) | **Open** | MFRECondImpliesSMLB |
| DeathDensityLB$(q, c)$ (death density $\geq c$ for all $k$) | **Open** | DeathDensityLB |
| AccumMod3LB$(c)$ (mod-3 density $\geq c$ for all $k$) | **Open** | AccumMod3LB |
| CRTPointwiseTransferBridge (PCE $\Rightarrow$ OCE) | **Open** | CRTPointwiseTransferBridge |
| SubstitutionPrinciple (= CME, fiber char sums) | **Open** | SubstitutionPrinciple |
| FourPointPCV (4-point correlation vanishing) | **Open** | FourPointPCV |
| SecondMomentSquaredBound | **Open** | SecondMomentSquaredBound |
| FourPointPCVImpliesSMSB | **Open** | FourPointPCVImpliesSMSB |
| SelfCorrectingDrift ($R(N) = o(N^2)$) | **Open** | SelfCorrectingDrift |
| LinearDrift ($\lvert R(N)\rvert \leq CN$) | **Open** | LinearDrift |
| TailWindowDecorrelation (cross terms vanish) | **Open** | TailWindowDecorrelation |
| TWDImpliesCCSB (TWD $\Rightarrow$ CCSB bridge) | **Open** | TWDImpliesCCSB |
| CrossPrimeDecorrelation (walk independence at distinct primes) | **Open** | CrossPrimeDecorrelation |
| MultiplierMarginalEquidist (unconditional mult char sums) | **Open** | MultiplierMarginalEquidist |
| MultWalkIndependence (mult–walk decorrelation) | **Open** | MultWalkIndependence |
| CRTMultiplierFiber (mixed mult–walk char sums) | **Open** | CRTMultiplierFiber |
| UniformProfiniteEquidist (Weyl criterion for $\hat{\mathbb{Z}}^\times$) | **Open** | UniformProfiniteEquidist |
| UniformConductorEquidist (sieve with growing conductor) | **Open** | UniformConductorEquidist |
| UCEImpliesCME (orbit-specificity bridge for UCE) | **Open** | UCEImpliesCME |
| FFLargeMonodromy (Galois group $\supseteq A_d$ for FF-EM) | **Open** | FFLargeMonodromy |
| FFCME (conditional equidist for FF-EM) | **Open** | FFCME |
| FFDynamicalHitting (cofinal $-1$ hits for FF-EM) | **Open** | FFDynamicalHitting |

*continued on next page*

| Result | Status | Lean identifier |
|---|---|---|
| SelectionBiasNeutral (min-degree preserves cancellation) | **Open** | SelectionBiasNeutral |
| WalkCharExpansion (Fourier inversion on finite groups) | **Open** | WalkCharExpansion |
| *ANT infrastructure (one-sided Tauberian + Abel chain)* | | |
| One-sided Tauberian upper bound | Proved | one_sided_tauberian_upper |
| L-series upper bound (residue classes) | Proved | residueClass_tsum_upper_bound |
| L-series both bounds (residue classes) | Proved | residueClass_tsum_both_bounds |
| WeightedPNTinAP ⇒ PrimeLogSumEquidist | Proved | prime_power_stripping_proved |
| Dirichlet's theorem (from Mathlib) | Proved | dirichlet_primes_in_ap |
| $\int 1/(t \log t)\, dt = \log\log$ (FTC) | Proved | integral_inv_mul_log |
| $\int 1/(t(\log t)^2)\, dt$ (FTC) | Proved | integral_inv_mul_log_sq |
| Main sum sandwich ($\log\log$ approximation) | Proved | main_sum_sandwich |
| WPNT ⇒ PrimesEquidistInAP (composed chain) | Proved | wpnt_implies_primes_equidist_proved |
| WPNT + Alladi + CRT + DSL ⇒ MC | Proved | wpnt_dsl_implies_mc |
| *Known theorems — not yet in Mathlib* | | |
| PrimeDensityEquipartition (PNT in APs) | Known | PrimeDensityEquipartition |
| GenericLPFEquidist (Alladi [9]) | Known | GenericLPFEquidist |
| BombieriVinogradov | Known | BombieriVinogradov |
| AnalyticLargeSieve | Known | AnalyticLargeSieve |
| ArithmeticLargeSieve | Known | ArithmeticLargeSieve |
| *Dead ends — false or blocked* | | |
| MultCSBImpliesMMCSB (false in general, §6.2) | **Dead** | MultCSBImpliesMMCSB |
| BlockRotationEstimate (impossible for $d \geq 3$, Remark 6.7) | **Dead** | BlockRotationEstimate |
| MultCancelToWalkCancel (counterexample, Dead End #117) | **Dead** | MultCancelToWalkCancel |
| Cofactor identity (joint variable, Dead End #115) | **Dead** | shifted_walk_eq_mult_mul_cof |
| SCD ≡ SVE (no new leverage, Dead End #120) | **Dead** | sve_implies_scd_above_threshold |
| SMSB+SE per-class → CME (Dead End #121) | **Dead** | smsb_se_collapse_certificate |

*continued on next page*

| Result | Status | Lean identifier |
|---|---|---|
| CCSB+CPD $\to$ UPE (pairwise $\not\Rightarrow$ $k$-wise, Dead End #125) | **Dead** | CCSBCPDImpliesUPE |
| SE $\not\Rightarrow$ DH (generation $\neq$ coverage, Dead End #130) | **Dead** | se_does_not_imply_dh |
| Dobrushin coefficient $= 1$ (deterministic, Dead End #131) | **Dead** | dobrushin_coefficient_one |
| $L$-function factorization circular (Dead End #132) | **Dead** | dead_end_132_witness |
| Self-similar FE $\neq$ Lapidus framework (Dead End #133) | **Dead** | dead_end_133_witness |
| No Tauberian lever for $L_{\mathrm{EM}}$ (Dead End #134) | **Dead** | tauberian_lever_absent_witness |

# A Appendix

## A.1 History and Computational Status

Mullin posed the conjecture in 1963 [1]. In over sixty years, no proof has been found, and no theoretical approach has come close. The problem sits in an unusual position: it is elementary to state, each individual step is deterministic, yet the global behavior of the sequence appears completely intractable.

**The largest-factor variant.** Cox and van der Poorten [11] showed that the related sequence using the *largest* prime factor—where each term is $\mathrm{gpf}(\mathrm{P}_2(n)+1)$ instead of minFac—provably misses infinitely many primes (for instance, 5 never appears). By always jumping to the largest factor of $\mathrm{P}_2(n)+1$, the sequence leaps past small primes and can never return to them, since each Euclid number is coprime to every earlier term. This refuted the natural strengthening that surjectivity holds regardless of the factor-selection rule, and showed that the minFac rule is essential to the conjecture.

The two selection rules are also structurally different. The largest prime factor $P^+(n) = \mathrm{gpf}(n)$ has rich algebraic structure: the sets $\{n : P^+(n) \leq y\}$ (smooth numbers) are controlled by the Dickman function, and for polynomial sequences $f(n) = \mathrm{P}_2(n) + 1$ one can sometimes exploit algebraic curves and Hasse–Weil bounds. In contrast, the smallest prime factor $P^-(n) = \mathrm{minFac}(n)$ is purely a *sieve* object: controlling $P^-(n)$ requires excluding small prime divisors one at a time (CRT + Mertens), and no algebraic-geometric handle exists. This gpf/minFac asymmetry is one reason the largest-factor variant admits a short proof while the smallest-factor conjecture remains open.

**Variants and surveys.** Booker [3] showed that a carefully chosen variant of the Euclid–Mullin sequence *does* contain every prime: by selecting a specific (not necessarily smallest) prime factor at each step, one can steer the sequence to hit every prime. This demonstrates that the conjecture is *delicate*: the surjectivity depends on the precise rule, not just the Euclidean structure. Pollack and Treviño [5] surveyed the problem's place in the broader landscape of Euclid-inspired sequences, and studied distributional properties of primes "forgotten" by Euclid-type constructions.

**Computational status.** The sequence has been extended through a series of large-scale factoring efforts:

- Wagstaff (1993) computed through the 43rd term.

- In 2010, the 180-digit number $P_2(43) + 1$ was factored via GNFS (General Number Field Sieve), yielding a 68-digit prime as $a(44)$. Terms $a(45)$–$a(47)$ followed.
- In 2012, Propper factored the 256-digit number $P_2(47) + 1$ by ECM (Elliptic Curve Method), discovering a 75-digit factor and extending the sequence to 51 terms (Booker–Irvine [2]).
- Finding $a(52)$ requires factoring a 335-digit number. No factorization is known as of 2025.

After 51 terms, the smallest primes not yet observed are 41 and 47. Note that 31—a smaller prime—does not appear until position 50.

**Brute force and the complexity of factoring.** Brute-force computation cannot attack the conjecture. Each new term requires factoring a number whose digit count grows roughly linearly with the number of terms, quickly exceeding the reach of any known algorithm. But even if we could compute millions of terms, the conjecture is a $\forall$-statement over all primes, and no finite prefix can rule out a prime that first appears at an astronomically large index.

The deeper issue is a possible link to the computational complexity of integer factorization. Factoring is believed to be *slightly less than hard*: neither polynomial (as it would be if $\mathsf{P} = \mathsf{NP}$) nor fully exponential, but subexponential—the best known algorithms (number field sieve) run in time $L_N(1/3, c) = \exp\bigl(c\,(\ln N)^{1/3}\,(\ln\ln N)^{2/3}\bigr)$. This intermediate complexity may be reflected in the conjecture itself. Each term $a(n{+}1) = \mathrm{minFac}(P_2(n)+1)$ depends on the *complete factorization* of a number encoding all previous terms; changing a single early term alters every subsequent one. If factoring were easy, the sequence would be transparently computable and the conjecture might yield to direct analysis. If factoring were maximally hard (truly exponential), the sequence would behave like a random walk and the conjecture could be studied probabilistically. The conjectured intermediate complexity of factoring places the Euclid–Mullin sequence in a regime where it has enough algebraic structure to support a proof (it is not random), yet resists brute computation—precisely the regime addressed by the structural approach in the body of this paper.

## A.2 Analogies and Context

Mullin's Conjecture has no known applications: if proved tomorrow, no other theorem in number theory would follow from it. The value of the problem lies instead in what it *is an instance of*—and in the methods its resolution would require. The orbit-specificity barrier identified by this formalization appears, in recognizable form, across several active areas of mathematics.

**Artin's conjecture and the orbit-specificity gap.** The closest structural analogue to MC is Artin's conjecture on primitive roots [16]: for any integer $a \neq -1$ that is not a perfect square, the group $(\mathbb{Z}/p\mathbb{Z})^\times$ is generated by $a$ for infinitely many primes $p$. The parallel is precise:

- **Artin** asks whether the orbit of a fixed generator $a$ under repeated multiplication fills $(\mathbb{Z}/p\mathbb{Z})^\times$.
- **Mullin** asks whether the orbit of 2 under multiplication by successive EM primes in $(\mathbb{Z}/q\mathbb{Z})^\times$ hits the single element $-1$.

Both conjectures are blocked by the same fundamental obstacle: transferring *averaged* equidistribution results (which hold for most moduli or most generators) to *one specific deterministic orbit*. Hooley [7] proved Artin's conjecture conditional on GRH for Dedekind zeta functions of Kummer extensions—because GRH provides the uniformity across individual characters needed to control a single orbit. In our setting, this uniformity is exactly what CCSB demands.

The analogy is not merely structural. The Kummer extensions $\mathbb{Q}(\zeta_\ell, a^{1/\ell})$ that appear in Hooley's proof are the same extensions that arise in the EffectiveKummerEscape approach to SubgroupEscape (Section 6.4). The elementary PRE lemma (Theorem 3.1) sidesteps this Chebotarev machinery entirely for the algebraic component, but the dynamical component—does the

walk *hit* $-1$, not merely *generate* the full group?—remains exactly the orbit-specificity gap that GRH closes for Artin and that no known tool closes for Mullin.

**Multiplicative walks on finite groups.** The walk reformulation (Section 2) places MC in the framework of random walks on finite groups, studied systematically by Diaconis and others since the 1980s [14]. The Diaconis–Shahshahani upper bound lemma [13] shows that a random walk on a finite group $G$ driven by i.i.d. multipliers from a conjugation-invariant distribution mixes in $O(\log |G|)$ steps, with mixing measured by character sums.

The EM walk has the same algebraic structure—a multiplicative walk on the cyclic group $(\mathbb{Z}/q\mathbb{Z})^\times$—but violates every assumption of the classical mixing theory. The multipliers are deterministic, not random; they are not identically distributed; and most critically, the multiplier at step $n$ depends on the walk position at step $n$, creating exactly the position-multiplier correlation that the Diaconis–Shahshahani framework assumes away. CCSB is the precise derandomization of the mixing-time bound: it asks that the Fourier coefficients of the walk's occupation measure tend to zero for every non-trivial character.

**Smallest prime factor distribution.** The SieveTransfer hypothesis (Section 6.4) connects MC to the distribution of the smallest prime factor function $P^-(n) = \min\{p : p \mid n\}$, studied by Alladi [9], Hildebrand [10], and others. For generic integers in an arithmetic progression $n \equiv a \pmod q$, the distribution of $P^-(n)$ is controlled by the Dickman function and CRT-based equidistribution results. MC asks whether this equidistribution transfers from generic integers to the specific subsequence $\{\mathrm{P}_2(n) + 1\}_{n\geq 0}$. The same orbit-specificity transfer problem arises for Mersenne numbers $2^p - 1$, Fibonacci numbers, and polynomial iterates $f^{\circ n}(a)$ in arithmetic dynamics.

**The marginal/joint barrier and Sarnak's conjecture.** The formalization identifies a precise meta-obstacle (Section 6): *marginal* equidistribution of the multiplier residues is provable (the EM primes are equidistributed in residue classes, by Dirichlet's theorem); what MC requires is *joint* equidistribution of the pair (walk position, multiplier), conditioned on the walk's history. This barrier is an instance of a broader phenomenon. Sarnak's conjecture [15] asserts that the Möbius function $\mu(n)$ is orthogonal to every bounded deterministic sequence: $\frac{1}{N}\sum_{n\leq N} \mu(n)\, a_n \to 0$. CCSB is a Möbius-orthogonality-type statement for the EM sequence, placing MC squarely within the Sarnak program's conceptual framework, even though the EM sequence falls outside the technical scope of existing results (which require zero topological entropy).

**Greedy sieves and orbit-hitting.** MC is the simplest nontrivial instance of a broader question: does a greedy, deterministic prime-selection process eventually cover all primes? The Cox–van der Poorten result [11] shows that this determinism is fragile: choosing the *largest* factor instead provably misses primes. More generally, MC belongs to the family of *orbit-hitting problems* in arithmetic dynamics: given a map $T$ on a space $X$ and a target set $S \subset X$, does the orbit eventually enter $S$? Unlike Artin (where the map $x \mapsto ax$ is the same at every step) or Collatz (where the map depends only on the current state), the EM map varies at each step, determined by the factorization of a number that depends on the entire orbit history. This is the accumulator coupling of Section 1: the running product $\mathrm{P}_2(n)$ is a cumulative digest of the full orbit, and the walk–multiplier framework makes it precise. The formalization shows it is the sole source of difficulty: once the coupling is controlled (via CCSB or CME), MC follows by machine-checked deduction.

## A.3 The Function Field Analog

The Euclid–Mullin construction makes sense over any unique factorization domain. Replacing $\mathbb{Z}$ by $\mathbb{F}_p[t]$ and primes by monic irreducible polynomials gives a sequence

$$f_0 = t, \qquad f_{n+1} = \text{min-degree monic irreducible factor of } F(n) + 1,$$

where $F(n) = f_0 \cdots f_n$ is the running product. We call this the **FF-EM sequence** and state the function field analog of MC:

**Conjecture A.1** (FF-MC). ✓ *FFMullinConjecture* *Every monic irreducible polynomial in $\mathbb{F}_p[t]$ eventually appears in the FF-EM sequence.*

The function field setting is instructive because the Weil bound—an *open hypothesis* over $\mathbb{Z}$ (Wiener–Ikehara + Alladi)—is a *theorem* over $\mathbb{F}_p[t]$. This eliminates the analytic number theory entirely: population equidistribution is free. The question becomes: what remains after removing the ANT difficulty?

**What the Weil bound gives.** Let $Q \in \mathbb{F}_p[t]$ be a monic irreducible of degree $d$, and $\chi : (\mathbb{F}_p[t]/(Q))^\times \to \mathbb{C}^\times$ a non-trivial multiplicative character. The Weil bound for function fields states:

$$\Big| \sum_{\substack{\alpha \in \mathbb{F}_p[t] \\ \deg \alpha < d}} \chi(\alpha \bmod Q) \Big| \;\le\; (d-1)\sqrt{p}.$$

This immediately gives **population equidistribution** (✓ weil_implies_population_equidist): among all monic irreducibles, the residues modulo $Q$ are equidistributed in $(\mathbb{F}_p[t]/(Q))^\times$. Over $\mathbb{Z}$, obtaining the analogous statement requires the Weighted PNT in Arithmetic Progressions (= Wiener–Ikehara), which is the sole unformalized ANT input. Over $\mathbb{F}_p[t]$, it is unconditional.

**What the Weil bound does not give.** Population equidistribution controls character sums over *all* monic irreducibles—a generic sum. FF-MC requires controlling the factorization of the *specific* polynomial $F(n) + 1$, which is determined by the entire history of the sequence. The Weil bound says nothing about which irreducible factor of a specific polynomial has the smallest degree.

This is the **orbit-specificity barrier** (Dead End #127, ✓ WeilDoesNotImplyFFDSL), structurally identical to the integer case: no known result transfers population-level equidistribution to a specific deterministic orbit. The function field analog thus confirms that the difficulty of MC is *not* the analytic number theory but the orbit transfer.

**The bootstrap: competitor exhaustion.** Over $\mathbb{Z}$, the bootstrap induction is clean: minFac selects a unique prime, so if $q \mid \mathrm{P}_2(n)+1$ and all smaller primes have appeared, then $\mathrm{em}_2(n+1) = q$. Over $\mathbb{F}_p[t]$, multiple irreducibles of the same degree can divide $F(n) + 1$, and the min-degree rule only guarantees that the selected factor has degree $\le \deg Q$.

The solution is **competitor exhaustion** (✓ ff_element_capture): there are finitely many monic irreducibles of each degree $d$ over $\mathbb{F}_p$ (exactly $\frac{1}{d}\sum_{e|d} \mu(d/e)\, p^e$ of them). If $Q$ divides $F(n) + 1$ cofinally, the hitting set $\{n : Q \mid F(n)+1\}$ is infinite. At each such $n$, the selected factor $f_{n+1}$ has $\deg f_{n+1} \le \deg Q$ and is injective into the finite set of competitors (by ✓ ffSeq_injective_proved). Since an injection from an infinite set to a finite set is impossible, eventually all competitors of degree $\le \deg Q$ are consumed, and $Q$ must be selected.

**Theorem A.2** (✓ ff_dh_implies_ffmc). FFDynamicalHitting $\implies$ FF-MC.

Here FFDynamicalHitting asserts: for every monic irreducible $Q$ not in the sequence, $Q \mid F(n) + 1$ for cofinally many $n$. The proof is a strong induction on $\deg Q$: given FF-MC below degree $d$, cofinal hits by $Q$ plus competitor exhaustion force $Q$ to appear.

**SubgroupEscape via Weil.** Over $\mathbb{Z}$, SubgroupEscape (SE) is proved elementarily via PrimeResidueEscape. Over $\mathbb{F}_p[t]$, the Weil bound gives a quantitative version for *large* $p$.

The idea: suppose all degree-1 multipliers $\{(t-a) \bmod Q : a \in \mathbb{F}_p\}$ lie in a proper subgroup $H \leq (\mathbb{F}_p[t]/(Q))^\times$ of index $\ell$. Then for any character $\chi$ that kills $H$ (i.e., $\chi(h) = 1$ for $h \in H$), the character sum $\sum_{a \in \mathbb{F}_p} \chi((t-a) \bmod Q) = p$ since every term is 1. But the Weil bound gives $|\text{sum}| \leq (d-1)\sqrt{p}$, yielding $p \leq (d-1)\sqrt{p}$, i.e., $p \leq (d-1)^2$.

**Theorem A.3** (✓ weil_implies_ff_se)**.** *If $p \geq (d-1)^2 + 1$, then the degree-1 multipliers generate the full unit group $(\mathbb{F}_p[t]/(Q))^\times$ for every monic irreducible $Q$ of degree $d$.*

The threshold $(d-1)^2 + 1$ is sharp for this argument. For $d = 1$, SE holds for all $p$ (the degree-1 images *are* all nonzero elements of $\mathbb{F}_p$, ✓ ff_se_degree_one). For $d = 2$, the threshold is 2, so SE holds for all odd primes.

**The generation-to-coverage gap.** SE proves that the multipliers *generate* the full unit group. Does this imply the walk *visits* $-1$? No.

**Example A.4** (✓ alternating_walk_misses_two)**.** In $\mathbb{Z}/4\mathbb{Z}$, the alternating steps $\{1, 3, 1, 3, \ldots\}$ generate the full group ($\gcd(1, 3) = 1$), but the additive walk $0 \to 1 \to 0 \to 1 \to \cdots$ visits only $\{0, 1\}$, permanently missing 2 and 3.

This is **Dead End #130**: SE does not imply DH. Generation is an algebraic property (the subgroup generated by the step set is maximal); coverage is a dynamical property (the walk trajectory actually reaches every element). The two coincide for random walks (Diaconis–Shahshahani) but diverge for deterministic ones.

**The three-level hierarchy.** The FF-MC reduction decomposes the orbit-specificity barrier into three levels of difficulty (✓ ff_mc_mult_ccsb_landscape):

1. **Population level** (solved). Among *all* monic irreducibles of degree $e$, character values are equidistributed. Free from the Weil bound.
2. **Fiber level** (open). Among irreducible factors of a *specific* polynomial $f$ lying in a specific residue class mod $Q$, character values cancel. This requires orbit-specific information: Deligne's equidistribution theorem (Weil II) applies to algebraic families, not to the sequential FF-EM construction.
3. **Selection level** (open). Among the irreducible factors of $f$, the one of *smallest degree* has unbiased character value. This is SelectionBiasNeutral: does the greedy min-degree rule preserve character cancellation? It is a purely combinatorial question, independent of algebraic geometry.

The selection level is the true core of the difficulty. Even if the Weil bound gives population equidistribution and Deligne gives fiber-level equidistribution, the minimum-degree selection could systematically bias character values.

**The cyclotomic obstruction.** A natural strategy for fiber-level information is the monodromy approach: if the Galois group of $F(n) + 1$ is "large" (e.g., contains the alternating group $A_d$), then Deligne's equidistribution theorem [18] constrains the Frobenius conjugacy class distribution and hence the factorization statistics.

*Remark* A.5 (Dead End #129, ✓ ff_cyclotomic_dead_end). The **FF Large Monodromy** hypothesis (Galois group of $F(n) + 1$ eventually contains $A_d$) is *structurally false*. The product of all monic irreducibles of degree $\leq d$ over $\mathbb{F}_p$ is $t^{p^d} - t$ (a standard identity). Adding 1 gives $t^{p^d} - t + 1$, whose splitting field is contained in $\mathbb{F}_{p^N}$ for some $N$: the Galois group is *abelian*. Since the FF-EM sequence greedily consumes all irreducibles of each degree, $F(n)$ eventually divides $t^{p^d} - t$, and the Galois group of $F(n) + 1$ is forced to be abelian. Abelian monodromy

recovers only Dirichlet-type character sums—i.e., population equidistribution, which is already free from Weil.

This rules out the monodromy route to FF-MC entirely. The Galois structure of the greedy Euclid construction is fundamentally different from that of a "random" polynomial of the same degree.

**Summary.** The function field analog isolates the difficulty of Mullin's Conjecture with surgical precision. Removing the analytic number theory (by working over $\mathbb{F}_p[t]$ where Weil replaces Wiener–Ikehara) reveals that the entire difficulty lies in the orbit-specificity transfer: from population statistics to a specific deterministic orbit. The three dead ends (#127: Weil does not imply FF-DSL; #129: large monodromy is false; #130: SE does not imply DH) collectively show that the function field setting, despite its algebraic advantages, faces the same fundamental barrier as the integer case.

The formalization across five files (2,302 lines, zero `sorry`) makes the orbit-specificity barrier visible as a mathematical theorem, not merely a heuristic observation: *every* algebraic tool that is available over function fields has been applied, and the residual is precisely the same open hypothesis (DSL/CME) that blocks MC over $\mathbb{Z}$.

## A.4 Additional Sieve and Spectral Routes

This appendix collects the sieve and spectral-energy routes to MC that complement the three principal reductions (DH, CCSB, BV) presented in the body. All reduction arrows are machine-verified; the sole open content in each route is the orbit-specificity transfer.

### Arithmetic Large Sieve Route

**Theorem A.6** (✓ arith_ls_chain_mc)**.** ArithLS + ArithLSImpliesMMCSB $\implies$ MC.

The arithmetic large sieve gives character sum bounds for Dirichlet characters (a known result, not in Mathlib). The transfer ArithLSImpliesMMCSB is open and is in fact a **dead end**: universal coefficient bounds cannot distinguish equidistributed walks from clumped walks.

### Analytic Large Sieve Route

The most developed route connects the analytic large sieve to MC via Gauss sum inversion.

**Property A.7** (AnalyticLargeSieve (**ALS**))**.** For well-separated points $\{\alpha_r\} \subset \mathbb{R}/\mathbb{Z}$ with $\min_{r\neq s} \|\alpha_r - \alpha_s\| \geq \delta$:

$$\sum_r \left\| \sum_{n<N} a_n\, e(n\alpha_r) \right\|^2 \;\leq\; (N - 1 + \delta^{-1}) \sum_{n<N} \|a_n\|^2.$$

**Theorem A.8** (✓ weak_als_from_card_bound)**.** *A* weak *version with constant $N\cdot(\delta^{-1}+1)$ is proved (the optimal constant is $N - 1 + \delta^{-1}$, but the difference is immaterial since MMCSB requires only $o(N)$).*

The key bridge is Gauss sum inversion: a Gauss sum $\tau(\chi) = \sum_a \chi(a)\, e(a/p)$ intertwines multiplication and addition on $\mathbb{Z}/p\mathbb{Z}$, converting character sums to exponential sums.

**Theorem A.9** (✓ char_sum_to_exp_sum)**.** *For a non-trivial character $\chi$ mod $p$ prime: $\sum_n f(n)\,\chi(n) = \tau^{-1} \sum_{b=1}^{p-1} \chi^{-1}(b) \sum_n f(n)\,\psi(bn)$.*

The GaussConductorTransfer composes eight internal lemmas (all proved, §56–§62) into the bridge from ALS to the prime arithmetic large sieve:

**Theorem A.10** (✓ als_implies_prime_arith_ls). AnalyticLargeSieve $\Longrightarrow$ PrimeArithLS.

**Theorem A.11** (✓ als_prime_arith_ls_chain_mc). ALS+PrimeArithLSImpliesMMCSB $\Longrightarrow$ MC.

A deeper decomposition of ALS itself is architectured in IKCh7.lean: the **Hilbert chain**

$$\text{HilbertInequality+CscPartialFraction} \xrightarrow{\text{open}} \text{CscBilinearBound} \xrightarrow{\text{open}} \text{GramOffDiagBilinearBound} \xrightarrow{\text{proved}} \text{A}$$

(✓ hilbert_chain_als). HilbertInequality is the Montgomery–Vaughan generalized Hilbert inequality (IK Lemma 7.8); CscPartialFraction is the Mittag-Leffler expansion $\pi/\sin(\pi\theta) = 1/\theta + \sum_{n\geq 1}(-1)^n(1/(\theta+n) + 1/(\theta-n))$, derivable from Mathlib's cot_series_rep via $\csc x = \cot(x/2) - \cot x$. The infrastructure for CscPartialFraction (the identity $\pi\cot(\pi\theta/2) - \pi\cot(\pi\theta) = \pi/\sin(\pi\theta)$ and both Mathlib cot-series specializations) is proved; the final HasSum assembly is complete (proved via mittag_leffler_csc_proved). Two bridges (HilbertCscBilinearBridge, CscBilinearImpliesGramOffDiag) and the terminal arrow (gram_offdiag_bilinear_implies_als) complete the chain.

The remaining open content is PrimeArithLSImpliesMMCSB: transferring prime-modulus arithmetic large sieve bounds to multi-modular character sum bounds for the specific EM orbit.

### The Spectral Energy Route

Instead of individual character sums, this route examines the *total energy* of the walk occupation measure $V_N(a) = |\{n < N : \mathrm{P}_{2,q}(n) = a\}|$.

**Theorem A.12** (✓ walk_energy_parseval). $\sum_\chi \|S_\chi(N)\|^2 = (q-1)\sum_{a\in(\mathbb{Z}/q\mathbb{Z})^\times} V_N(a)^2$ *(Parseval).*

The *excess energy* $E(N) = \sum_{\chi\neq 1}\|S_\chi(N)\|^2$. If $E(N) = o(N^2)$, then every non-trivial character sum is individually $o(N)$, which is CCSB.

**Property A.13** (SubquadraticVisitEnergy (**SVE**)). For every missing prime $q$ and $\varepsilon > 0$, there exists $N_0$ such that for $N \geq N_0$: $E(N) \leq \varepsilon N^2$.

**Theorem A.14** (✓ sve_implies_mmcsb). SVE $\Longrightarrow$ MMCSB $\Longrightarrow$ MC.

SVE bounds the total energy $\sum_{\chi\neq 1}\|S_\chi(N)\|^2 = o(N^2)$; since each non-trivial character sum is a non-negative summand, every individual $\|S_\chi(N)\|^2 = o(N^2)$, giving CCSB for each prime individually and MMCSB jointly.

**Van der Corput and higher-order decorrelation.** The van der Corput inequality bounds $|\sum z_n|$ via autocorrelations:

**Theorem A.15** (✓ van_der_corput_bound). $\left\|\sum_{n\leq N} z_n\right\|^2 \leq \frac{N+H}{H+1}\left(N + 2\sum_{h=1}^{H}|\mathrm{Re}\sum_{n\leq N-h} z_n\overline{z_{n+h}}|\right)$.

For the EM walk, lag-$h$ autocorrelations involve $h$-step multiplier products. At $h = 1$, the autocorrelation equals the multiplier character sum (Theorem 4.23), so VdC with a single shift gives only $O(N)$. Higher lags may decorrelate:

**Property A.16** (HigherOrderDecorrelation (**HOD**)). For every missing prime $q$, non-trivial $\chi$, and $\varepsilon > 0$: there exists $H_0$ such that for $H \geq H_0$, $N_0$ such that for $N \geq N_0$ and all $1 \leq h \leq H$: $\|R_h(N)\| \leq \varepsilon N$.

**Theorem A.17** (✓ hod_implies_ccsb). HOD $\Longrightarrow$ CCSB $\Longrightarrow$ MC.

**Conditional multiplier equidistribution.**

**Property A.18** (ConditionalMultiplierEquidist (**CME**)). For every missing prime $q$, non-trivial $\chi$, $\varepsilon > 0$, $N_0$ such that for $N \geq N_0$ and every $c \in (\mathbb{Z}/q\mathbb{Z})^\times$: $\|\sum_{\substack{n<N \\ w(n)=c}} \chi(m(n))\| \leq \varepsilon N$.

**Theorem A.19** (✓ cme_implies_dec). CME $\Longrightarrow$ DecorrelationHypothesis.

**Theorem A.20** (✓ cme_implies_ccsb). CME $\Longrightarrow$ CCSB.

*Proof sketch.* The walk telescoping identity gives $\sum \chi(w(n)) = \sum \chi(w(n))\chi(m(n)) - (\chi(w(N)) - \chi(w(0)))$. The product sum decomposes by fiber: $\sum \chi(w(n))\chi(m(n)) = \sum_a \chi(a) \cdot \sum_{w(n)=a} \chi(m(n))$. CME bounds each fiber sum by $\varepsilon' N$; the triangle inequality sums over at most $|(\mathbb{Z}/q\mathbb{Z})^\times|$ fibers; the boundary term $\chi(w(N)) - \chi(w(0))$ has norm $\leq 2$ and is absorbed for large $N$. □

This is the key reduction that bypasses PED, BRE, and the $d \geq 3$ barrier. The proof works for all character orders because it uses only the fiber decomposition and telescoping—no block rotation estimate is needed.

**Theorem A.21** (✓ cme_implies_mc). CME $\Longrightarrow$ MC.

*Proof.* Compose `cme_implies_ccsb` with `complex_csb_mc'`. □

**Theorem A.22** (✓ cme_chain_mc). CME + PEDImpliesCSB $\Longrightarrow$ MC.

This older route through the Dec $\to$ PED $\to$ CCSB chain is superseded by the direct CME $\to$ CCSB reduction above, which requires no additional hypotheses.

**The Complete Hypothesis Hierarchy**

$$\text{PED} < \text{Dec} < \text{CME} \xrightarrow{\text{proved}} \text{CCSB} \approx \text{HOD} \approx \text{SVE},$$

where "$<$" means strictly weaker (proved implication, known not to reverse) and "$\approx$" means equivalent. HOD $\Leftrightarrow$ CCSB via van der Corput; SVE $\Leftrightarrow$ CCSB via Parseval; CME $\Rightarrow$ CCSB via telescoping + fiber decomposition (Theorem A.20).

Every hypothesis implies MC. The PED route has an open BRE bridge for $d \geq 3$ characters, but this is now bypassed: the direct CME $\to$ CCSB arrow is proved for all character orders. CME is the *sharpest sufficient condition*—the weakest hypothesis known to imply MC.

## A.5 Weak Mullin and Confined Energy

The formalization explores what can be said about the "missing primes"—those primes that never appear in the EM sequence—without assuming MC outright.

**Missing primes and Weak Mullin.** Define the set of *missing primes*

$$M = \{p \in \mathbb{P} : p \neq \mathrm{em}_2(k) \text{ for all } k\}.$$

MC is the assertion $M = \emptyset$. A natural weakening asks only that $M$ is *small* in an analytic sense:

**Property A.23** (WeakMullin (**WM**)). ✓ WeakMullin The reciprocal sum over missing primes converges: $\sum_{q \in M} 1/q < \infty$.

This is strictly weaker than MC (which gives $M = \emptyset$ and hence a trivially convergent empty sum) but strong enough to have a nontrivial consequence:

**Property A.24** (ReciprocalDivergence (**RD**)). ✓ ReciprocalDivergence The reciprocal sum over EM primes diverges: $\sum_{k=0}^{\infty} 1/\mathrm{em}_2(k) = \infty$.

**Theorem A.25** (✓ mc_implies_wm). MC $\Longrightarrow$ WM.

**Theorem A.26** (✓ wm_implies_rd). WM $\Longrightarrow$ RD.

*Proof.* Partition the primes into two disjoint sets: $\mathbb{P} = A \cup M$, where $A = \{\mathrm{em}_2(k) : k \in \mathbb{N}\}$ is the set of appeared primes. The sets are disjoint since every missing prime is, by definition, not in $A$. Consider the indicator sums $\Sigma_A = \sum_{p \in A} 1/p$ and $\Sigma_M = \sum_{q \in M} 1/q$.

Suppose for contradiction that $\sum_k 1/\mathrm{em}_2(k)$ converges. Since $\mathrm{em}_2$ is injective (the EM sequence never repeats a prime), the map $k \mapsto \mathrm{em}_2(k)$ is an injection into $A$, so $\Sigma_A$ converges. WM gives that $\Sigma_M$ converges. But then $\sum_{p \in \mathbb{P}} 1/p = \Sigma_A + \Sigma_M$ converges, contradicting the divergence of the sum of prime reciprocals (`not_summable_one_div_on_primes` in Mathlib). □

The chain MC ⇒ WM ⇒ RD gives a proved consequence of MC: if every prime appears, then the reciprocal sum of the sequence diverges. Contrapositively, if $\sum 1/\mathrm{em}_2(k)$ converged, some primes would be missing with divergent reciprocal sum—i.e., the missing set would be "large" in the harmonic sense.

**Product divergence.** The negation of WM has a quantitative consequence for products over missing primes.

**Theorem A.27** (✓ safe_fraction_exp_bound). *For a finite set $Q$ of reals with $q \geq 2$ for each $q \in Q$:*

$$\prod_{q \in Q} \frac{q-2}{q-1} \;\leq\; \exp\Big(-\sum_{q \in Q} \frac{1}{q-1}\Big).$$

*Proof sketch.* Each factor satisfies $1 - 1/(q-1) \leq e^{-1/(q-1)}$ by the inequality $1 - x \leq e^{-x}$. Taking the product over $Q$ gives the result. □

**Theorem A.28** (✓ not_wm_product_diverges). *If ¬WM, then for every $C \in \mathbb{R}$ there exists a finite subset $F \subseteq M$ with $\prod_{q \in F} \frac{q-1}{q-2} \geq C$.*

*Proof sketch.* ¬WM gives $\sum_{q \in M} 1/q = \infty$, hence $\sum_{q \in M} 1/(q-1) = \infty$. By the safe fraction bound, $\prod_{q \in F} (q-2)/(q-1) \leq e^{-\sum 1/(q-1)}$, which tends to 0 as $F$ grows. Its reciprocal $\prod (q-1)/(q-2)$ therefore exceeds any bound. □

The product $\prod (q-1)/(q-2)$ over missing primes measures the "confinement cost": each missing prime $q$ confines the walk to $q-2$ of the $q-1$ units in $(\mathbb{Z}/q\mathbb{Z})^\times$ (avoiding $-1$). If WM fails, this confinement cost is unbounded, meaning that avoiding more and more primes imposes an exponentially growing constraint.

**EMBV and confined energy.** The confined-energy perspective connects the missing primes to the spectral route via visit counts.

**Property A.29** (EMBV). ✓ EMBV An alias for MMCSB, emphasizing the Bombieri–Vinogradov analogy: the EM walk satisfies multi-modular character sum bounds.

**Theorem A.30** (✓ embv_implies_mc). EMBV $\Longrightarrow$ MC (*conditional on the sieve-gap threshold* $Q_0 \leq 11$).

For a missing prime $q \geq 3$, the walk avoids $-1$ entirely, so the $N$ visits are distributed among only $q-2$ residues instead of the full $q-1$. A pigeonhole argument gives:

**Theorem A.31** (✓ per_prime_confined_energy_lb). *For a missing prime $q \geq 3$ and $N$ steps:*

$$\frac{N^2}{q-2} \leq (q-1) \sum_{a \in (\mathbb{Z}/q\mathbb{Z})^\times} V_N(a)^2,$$

*where $V_N(a) = |\{n < N : \mathrm{P}_{2,q}(n) = a\}|$ is the visit count.*

*Proof sketch.* Since $q$ is missing, $V_N(-1) = 0$, so all $N$ visits lie among $q-2$ residues. By Cauchy–Schwarz (or convexity of $x^2$), $\sum_a V_N(a)^2 \geq N^2/(q-2)$. Multiplying by $q-1$ gives the stated bound. □

Compare this with the equidistributed baseline $N^2/(q-1)$: the confined-to-equidistributed energy ratio is $(q-1)/(q-2)$, which is bounded away from 1 for all $q$. This excess energy is precisely what SVE forbids: subquadratic visit energy requires the walk to spread evenly, but a missing prime forces concentration.

**Property A.32** (JointSVE). ✓ JointSVE Joint subquadratic visit energy: the sum of excess energies over any finite set of missing primes is $o(N^2)$.

**Theorem A.33** (✓ jointSVE_implies_mmcsb). JointSVE $\Longrightarrow$ MMCSB.

The proof reduces JointSVE to per-prime SVE (by instantiating with singleton sets), then applies the proved SVE $\Rightarrow$ MMCSB chain. This connects the "missing primes" picture to the spectral route: bounding the total confined energy across primes is equivalent to the multi-modular character sum bound.

**The shifted squarefree population.** The EM accumulator $\mathrm{P}_2(n)$ is a product of distinct primes and is therefore squarefree:

**Theorem A.34** (✓ prod_squarefree). *$\mathrm{P}_2(n)$ is squarefree for all $n$.*

*Proof.* By induction. The base case $\mathrm{P}_2(0) = 2$ is prime, hence squarefree. For the inductive step, $\mathrm{P}_2(n+1) = \mathrm{P}_2(n) \cdot \mathrm{em}_2(n+1)$. The new factor $\mathrm{em}_2(n+1)$ divides $\mathrm{P}_2(n)+1$ and is therefore coprime to $\mathrm{P}_2(n)$ (consecutive integers share no common factor). Since both $\mathrm{P}_2(n)$ (by induction) and $\mathrm{em}_2(n+1)$ (a prime) are squarefree, and they are coprime, their product is squarefree. □

Consequently, every Euclid number $\mathrm{P}_2(n) + 1$ belongs to the *shifted squarefree population* $\mathcal{S} = \{m \geq 2 : m-1 \text{ squarefree}\}$, which has density $6/\pi^2 \approx 0.608$ among the positive integers.

This gives a decomposition of WE (= EMDirichlet) into two components:

- **Population Equidistribution (PE):** among elements of $\mathcal{S}$, the smallest prime factor is equidistributed modulo any prime $q$. This is provable by the Selberg sieve and Dirichlet's theorem: the sieve weights $g(p) \prod_{r<p}(1-g(r))$ are smooth in $p$ and do not depend on $p \bmod q$, so summing over primes in each residue class gives density $1/(q-1)$.
- **Population Transfer (PT):** the EM trajectory samples $\mathcal{S}$ without introducing mod-$q$ bias. Formally: PE $\Rightarrow$ EMDirichlet. This is the open content, structurally supported by `crt_multiplier_invariance` (the sampling rule is $q$-blind).

**Theorem A.35** (✓ pe_transfer_cme_implies_mc). PE + PT + EMDImpliesCME $\Longrightarrow$ MC.

The chain is: PE + PT gives EMDirichlet, which with EMDImpliesCME gives CME, which implies CCSB, which implies MC. The open content is isolated in PT (the trajectory-to-population transfer) and EMDImpliesCME (the unconditional-to-conditional transfer). Both gaps are instances of the orbit-specificity barrier: transferring population statistics to a specific deterministic trajectory.

## A.6 Dead Ends Catalogue

134 potential approaches were explored and found to be dead ends (catalogued in full in Meta/DeadEnds.lean, with 13 formal Lean witnesses). Each elimination is informative: it narrows the space of viable strategies. Eight dead ends have weak-MC revival score $\geq 2$, meaning they contribute to weaker forms of the conjecture (see §6.4). A representative selection, grouped by the type of obstruction:

| **Dead end** | **Why it fails** |
|---|---|
| Ensemble-to-orbit transfer: *tool applies to generic sequences, not the specific EM orbit* | |
| BV for EM subsequence | BV applies to all primes in APs, not to a greedy subsequence. |
| Furstenberg / ergodic theory | Standard ergodic methods assume classical multiplicativity; the EM sequence is recursive and non-multiplicative. |
| Diaconis–Shahshahani lemma | Requires i.i.d. random steps; inapplicable to the deterministic EM walk. |
| Independence / linearity violated: *tool requires additive or independent structure the walk lacks* | |
| Large sieve for partial products | The large sieve handles linear sums, not multiplicative walks. |
| Abel summation | Converts multiplier decorrelation to walk-sum bounds, but the summation weights *amplify* rather than cancel. |
| Self-avoidance $\Rightarrow$ CCSB | Self-avoidance (no repeated $\hat{\mathbb{Z}}$ positions) is invisible to characters, which see only residues. |
| Wrong algebraic structure: *the group or decomposition has no room for the desired bound* | |
| Non-abelian / representation | $(\mathbb{Z}/q\mathbb{Z})^\times$ is cyclic; all irreps are 1-d characters. No higher-dimensional structure to exploit. |
| CRT product group | Reformulating on $\prod_{q\leq Q}(\mathbb{Z}/q\mathbb{Z})^\times$ makes the problem harder: the product group is exponentially large. |
| NoLongRuns + PED $\Rightarrow$ BRE ($d\geq 3$) | Variable block lengths align adversarially with character phases. |
| DPED $\Rightarrow$ CCSB ($d\geq 3$) | Alternating $\omega, \omega^2$ rotations satisfy DPED yet produce $\Theta(N)$ walk sums. All PED-to-CCSB intermediates ruled out. |
| Reduces to single-modulus CCSB: *no genuine simplification* | |
| Multi-modular approaches | All variants (BV + threshold, CRT, death coupling) collapse to single-modulus CCSB. |
| Death set coupling across moduli | Death sets $\{m : \mathrm{minFac}(m) \equiv -c^{-1}\}$ vary per step; no uniform coupling bound exists. |
| Spectral gap (deterministic walk) | Spectral gap theory applies to probability measures on groups (convergence of random sampling); the EM walk is a single deterministic path. |
| Information-theoretic bounds | Category error: entropy/mutual-information tools assume a random variable; the EM sequence is deterministic with zero entropy. |
| Multiplier-to-walk transfer: *multiplier cancellation does not force walk cancellation* | |
| MultCancelToWalkCancel | Multiplier energy $o(K)$ does not force walk energy $o(K)$. Counterexample: alternating multipliers $\{2,3\}$ mod 5 with $\chi(2) = i$ give multiplier cancellation yet $\lvert W_K\rvert = \Theta(K)$. Compatible with *all* EM structural properties (squarefree accumulator, coprime cascade, CRT invariance). Dead End #117. |

| Dead end | Why it fails |
|---|---|
| Cofactor identity | The "+1 shift" identity $w(n)+1 = m(n) \cdot \mathrm{cofZ}(n)$ (Theorem 4.24) factorizes one correlated variable into two; the cofactor remains a joint quantity, so the Marginal/Joint Barrier persists. Dead End #115. |
| SelfCorrectingDrift | The Lyapunov function $L(N) = \sum_c (V_c(N) - N/(q-1))^2$ telescopes to $L(N) = 2R(N) + O(N)$, so SCD ($R(N) = o(N^2)$) is algebraically equivalent to SVE ($L(N) = o(N^2)$). SCD provides no new proof leverage; it is a dynamical reformulation, not a reduction. Dead End #120. |
| SMSB + SE per-class escape | SecondMomentSquaredBound gives a global bad-set density bound; combining with SubgroupEscape to get per-class escape requires BadSetEquidistribution (bad steps don't concentrate in one class). BSE is a consequence of CME: going from marginal to conditional bad-density requires joint (position, badness) independence, which IS the orbit-specificity gap. Pigeonhole gives "some class" but not the specific class $-1$ needed for MC. Dead End #121. |
| Dobrushin coefficient | The Dobrushin coefficient of ergodicity equals 1 for every step of the deterministic EM walk (each transition is a point mass; disjoint support gives overlap = 0). Dobrushin's theorem requires $\sum(1-\alpha) = \infty$, but $\sum 0 = 0$. The weaker MUB hypothesis is genuinely weaker than CME (CME $\Rightarrow$ MUB proved) but useless without Dobrushin. Dead End #131. |
| $L$-function factorization | The factorization $L(s,\chi) = L_{\mathrm{EM}}(s,\chi) \cdot L_{\text{non-EM}}(s,\chi)$ is circular: proving $L_{\text{non-EM}} \neq 0$ on $\Re(s) = 1$ requires knowing which primes are non-EM, i.e., requires MC itself. Dead End #132. |
| Self-similar functional equation | The tail identity gives $L_{\mathrm{EM}} = \mathrm{head} + L_{\mathrm{EM,from}P(M)}$, but the tail orbit starts from $P(M) \neq 2$, so it is *not* a scalar multiple of $L_{\mathrm{EM}}$. The Lapidus–van Frankenhuijsen fractal zeta framework requires scaling ratios $\zeta(s) = \sum r_j^s \zeta(s) + f(s)$; the EM self-similarity does not match this form. Dead End #133. |
| No Tauberian lever | The super-exponential growth of $P(n)$ makes $\sum \mathrm{prod}(n)^{-s}$ converge for all $\Re(s) > 0$ (proved: accum_reciprocal_summable). The resulting Dirichlet series is entire in $\Re(s) > 0$ — no pole at $s = 1$ to exploit via Tauberian methods. The standard PNT argument uses the pole of $\zeta(s)$; $L_{\mathrm{EM}}$ has no such pole because EM primes are too sparse. Dead End #134. |

## A.7 Glossary of Definitions and Hypotheses

The table below collects every named definition, hypothesis, and key theorem introduced in this paper, with abbreviations and the section where each is defined.

| Abbr. | Name | Meaning | Ref. |
|---|---|---|---|
| *Core sequence and walk* | | | |
| — | Walk / Multiplier | $\mathrm{P}_{2,q}(n) = \mathrm{P}_2(n) \bmod q$; $\mathrm{m}_{2,q}(n) = \mathrm{em}_2(n+1) \bmod q$ | Def. 2.3 |

*continued on next page*

| Abbr. | Name | Meaning | Ref. |
|---|---|---|---|
| **MC** | MullinConjecture | Every prime appears in the Euclid–Mullin sequence | Conj. 1.1 |
| **ANT** | — | Standard analytic number theory (Dirichlet + sieve $\Rightarrow$ MFRE); assumed, not formalized | §5.1 |
| **MFRE** | MinFacResidueEquidist | minFac residues equidist. mod $q$ among $q$-rough sqfree ints; MFRE $\Rightarrow$ PE (proved) | §5.1 |
| *Algebraic hypotheses (§2–§3)* | | | |
| **SE** | SubgroupEscape | No proper subgroup of $(\mathbb{Z}/q\mathbb{Z})^\times$ contains all multipliers | Def. 2.14 |
| **HH** | HittingHypothesis | The walk reaches $-1$ cofinally: $\forall N, \exists n \geq N,\ q \mid \mathrm{P}_2(n)+1$ | Def. 3.6 |
| **DH** | DynamicalHitting | $\mathrm{SE}(q) \Rightarrow \mathrm{HH}(q)$ for every missing prime $q$ | Def. 3.6 |
| **SHH** | SingleHitHypothesis | $\mathrm{MC}(<q) + \mathrm{SE}(q) + q$ missing $\Rightarrow \exists\, n \geq N_0$ with $q \mid \mathrm{P}_2(n)+1$ | Def. 3.4 |
| **PRE** | PrimeResidueEscape | Every proper subgroup of $(\mathbb{Z}/p\mathbb{Z})^\times$ is escaped by some odd prime $< p$ | Thm. 3.1 |
| **PRE$_\ell$** | PowerResidueEscape | Multipliers escape the index-$\ell$ subgroup of $(\mathbb{Z}/q\mathbb{Z})^\times$ | §3 |
| — | ThresholdHitting | DH restricted to primes $q \geq B$ | §4.5 |
| *Character-analytic hypotheses (§4)* | | | |
| **CCSB** | ComplexCharSumBound | Walk char sums $S_\chi(N) = o(N)$ for all non-trivial $\chi$ | §4 |
| **MMCSB** | MultiModularCSB | CCSB simultaneously for all primes $q$ in a range | §4 |
| **ALS** | AnalyticLargeSieve | Large sieve inequality adapted to EM walk | §4 |
| — | HilbertInequality | Montgomery–Vaughan generalized Hilbert inequality (IK Lemma 7.8) | App. A.4 |
| — | CscPartialFraction | Mittag-Leffler expansion of $\pi \csc(\pi\theta)$ (proved) | App. A.4 |
| **PED** | PositiveEscapeDensity | Positive density of $n$ with $\mathrm{m}_{2,q}(n) \notin H$, for every proper $H$ | §4 |
| — | DecorrelationHypothesis | $\mathrm{m}_{2,q}(n)$ and $\mathrm{m}_{2,q}(n{+}1)$ are asymptotically independent | §4 |
| **BRE** | BlockRotationEstimate | Cancellation in block sums of characters applied to walk | §4 |
| **SVE** | SubquadraticVisitEnergy | $\sum_a \lvert\{n \leq N : \mathrm{P}_{2,q}(n) = a\}\rvert^2 = o(N^2/(q{-}1))$ | §4 |
| **SCD** | SelfCorrectingDrift | $R(N) = o(N^2)$; $\equiv$ SVE via Lyapunov telescope (Dead End #120) | §5 |
| **TWD** | TailWindowDecorrelation | Avg. \|cross term\| between windows vanishes; TWD $\Rightarrow$ CCSB $\Rightarrow$ MC | §5.6 |
| **HOD** | HigherOrderDecorrelation | Higher-order correlation bounds for walk increments | §4 |
| **CME** | ConditionalMultiplierEquidist | Conditional equidist. of multipliers given walk state; implies CCSB (proved) | §4 |
| — | EMDirichlet | EM primes equidistributed in residue classes; alias for Dec | App. A.4 |
| — | EMDImpliesCME | Open: unconditional equidist. $\Rightarrow$ conditional equidist. | App. A.4 |
| **WM** | WeakMullin | $\sum_{q \in M} 1/q < \infty$; MC $\Rightarrow$ WM $\Rightarrow$ RD (proved) | App. A.5 |
| **RD** | ReciprocalDivergence | $\sum_k 1/\mathrm{em}_2(k) = \infty$; WM $\Rightarrow$ RD (proved) | App. A.5 |
| **EMBV** | EM Bombieri–Vinogradov | Multi-modular char sum bound (alias for MMCSB); EMBV $\Rightarrow$ MC | App. A.5 |
| — | JointSVE | Joint subquadratic visit energy; JointSVE $\Rightarrow$ MMCSB (proved) | App. A.5 |
| — | PopulationEquidist | minFac equidist mod $q$ in shifted squarefree population (provable by sieve) | App. A.5 |

*continued on next page*

| Abbr. | Name | Meaning | Ref. |
|---|---|---|---|
| — | PopulationTransfer | PE $\Rightarrow$ EMDirichlet (open = unbiased sampling); PE+PT $\Rightarrow$ MC | App. A.5 |
| — | ExcursionIndependence | Excursion char sums approximately independent; EIP + BME $\Rightarrow$ MC | App. A.4 |
| *Ensemble framework (§5)* | | | |
| **DSL** | DeterministicStabilityLemma | Ensemble char energy concentrates over sqfree starting points; DSL $\Rightarrow$ MC | §5 |
| — | DSLHitting | Weaker: walk hits $-1$ for positive density of starting points; PE+DSLHitting $\Rightarrow$ MC | §5 |
| — | genProd / genSeq | Generalized EM from arbitrary starting point $n$; genProd$(2,k) = \mathrm{P}_2(k)$ | §5 |
| — | EnsembleConcentration | Char energy density for bad starting points $\to 0$ as $X \to \infty$ | §5 |
| — | CharSumVarianceBound | Ensemble average of char energy $\leq C \cdot K$ for all $X \geq X_0$ | §5 |
| — | FiberEnergyBound | $\sum_a \lVert F(a,N)\rVert^2 \leq \varepsilon N^2$; FEB $\Rightarrow$ CME (proved) | §4.4 |
| — | MinFacResidueEquidist | minFac residues equidist for $q$-rough sqfree ints; MFRE $\Rightarrow$ PE (proved) | §5 |
| — | JointStepEquidist | Joint distribution of consecutive genSeq equidist over sqfree $n$ (open) | §5 |
| — | MultCancelToWalkCancel | Mult. char cancel $\Rightarrow$ walk char cancel; $\equiv$ CCSB (Dead End #117) | §5 |
| — | WeylHittingBridge | Walk char cancel $\Rightarrow$ cofinal hitting; proved | §5 |
| — | Cofactor Identity | $w(n)+1 = m(n)\cdot\mathrm{cofZ}(n)$; proved but doesn't escape correlation | §4.5 |
| *Function field analog (App. A.3)* | | | |
| **FF-MC** | FFMullinConjecture | Every monic irreducible appears in FF-EM sequence | App. A.3 |
| — | FFDynamicalHitting | Cofinal $Q \mid F(n)+1$ for every monic irred. $Q$; FFDH $\Rightarrow$ FF-MC (proved) | App. A.3 |
| — | SelectionBiasNeutral | Min-degree selection preserves character cancellation (open; = Dead End #90) | App. A.3 |
| — | FFSubgroupEscape | SE for $p \geq (d-1)^2+1$ via Weil contradiction (proved) | App. A.3 |
| *SDDS framework* | | | |
| — | SDDS | Abstract sieve-defined dynamical system $s_{n+1} = s_n \cdot \Phi(s_n+1)$ | App. A.4 |
| — | NoAlgebraicObstruction | Multiplier subgroup generates full unit group; SE $\Rightarrow$ NAO (proved) | App. A.4 |
| — | StrongSME | Walk hits every unit cofinally; StrongSME $\Rightarrow$ MC (proved) | App. A.4 |
| *Named theorems* | | | |
| — | Confinement | If SE fails, the walk is confined to a proper coset | Thm. 2.13 |
| — | Walk–Divisibility Bridge | $\mathrm{P}_{2,q}(n) = -1 \Leftrightarrow q \mid \mathrm{P}_2(n)+1$ | Thm. 2.5 |
| — | One-prime gap | MC$(<q)$ + cofinal hit $\Rightarrow$ MC$(q)$ | Thm. 3.14 |
| — | Squarefree Accumulator | $\mathrm{P}_2(n)$ is squarefree (product of distinct primes); proved | App. A.5 |
| — | QR Obstruction | SE failure has density $O(2^{-k})$ by CRT + quadratic reciprocity | §3 |
| — | Gauss sum inversion | Character sums $\leftrightarrow$ exponential sums via Gauss sums | §4 |

## References


[1] A. A. Mullin. Recursive function theory (a modern look at a Euclidean idea). *Bull. Amer. Math. Soc.*, 69:737, 1963.

[2] A. R. Booker and S. A. Irvine. The Euclid–Mullin graph. *J. Number Theory*, 165:30–57, 2016.

[3] A. R. Booker. A variant of the Euclid–Mullin sequence containing every prime. *J. Integer Sequences*, 19:Article 16.6.4, 2016.

[4] B. Gordon. Sequences in groups with distinct partial products. *Pacific J. Math.*, 11(4):1309–1313, 1961.

[5] P. Pollack and E. Treviño. The primes that Euclid forgot. *Amer. Math. Monthly*, 121(5):433–437, 2014.

[6] M. Hardy and C. Woodgold. Prime simplicity. *Math. Intelligencer*, 31:44–52, 2009.

[7] C. Hooley. On Artin's conjecture. *J. Reine Angew. Math.*, 225:209–220, 1967.

[8] J. C. Lagarias and A. M. Odlyzko. Effective versions of the Chebotarev density theorem. In *Algebraic Number Fields (Durham Symposium)*, pages 409–464. Academic Press, 1977.

[9] K. Alladi. On the distribution of the largest prime factor. *Stud. Sci. Math. Hungar.*, 12:1–9, 1977.

[10] A. Hildebrand. On the number of positive integers $\leq x$ and free of prime factors $> y$. *J. Number Theory*, 22(3):289–307, 1986.

[11] C. D. Cox and A. J. van der Poorten. On a sequence of prime numbers. *J. Austral. Math. Soc.*, 8:571–574, 1968.

[12] H. Iwaniec and E. Kowalski. *Analytic Number Theory.* Amer. Math. Soc. Colloq. Publ., vol. 53, 2004.

[13] P. Diaconis and M. Shahshahani. Generating a random permutation with random transpositions. *Z. Wahrsch. Verw. Gebiete*, 57:159–179, 1981.

[14] F. R. K. Chung, P. Diaconis, and R. L. Graham. Random walks arising in random number generation. *Ann. Probab.*, 15(3):1148–1165, 1987.

[15] P. Sarnak. Three lectures on the Möbius function, randomness, and dynamics. Lecture notes, IAS, 2010. Available at `https://publications.ias.edu/sarnak/paper/512`.

[16] E. Artin. Beweis des allgemeinen Reziprozitätsgesetzes. *Abh. Math. Semin. Univ. Hambg.*, 5:353–363, 1927.

[17] R. W. K. Odoni. On the prime divisors of the sequence $w_{n+1} = 1 + w_1 \cdots w_n$. *J. London Math. Soc. (2)*, 32(1):1–11, 1985.

[18] P. Deligne. La conjecture de Weil. II. *Publ. Math. IHES*, 52:137–252, 1980.

[19] T. Zhu, P. Monticone, J. Avigad, and S. Welleck. LeanArchitect: Automating blueprint generation for humans and AI. *arXiv preprint*, 2601.22554, 2026.