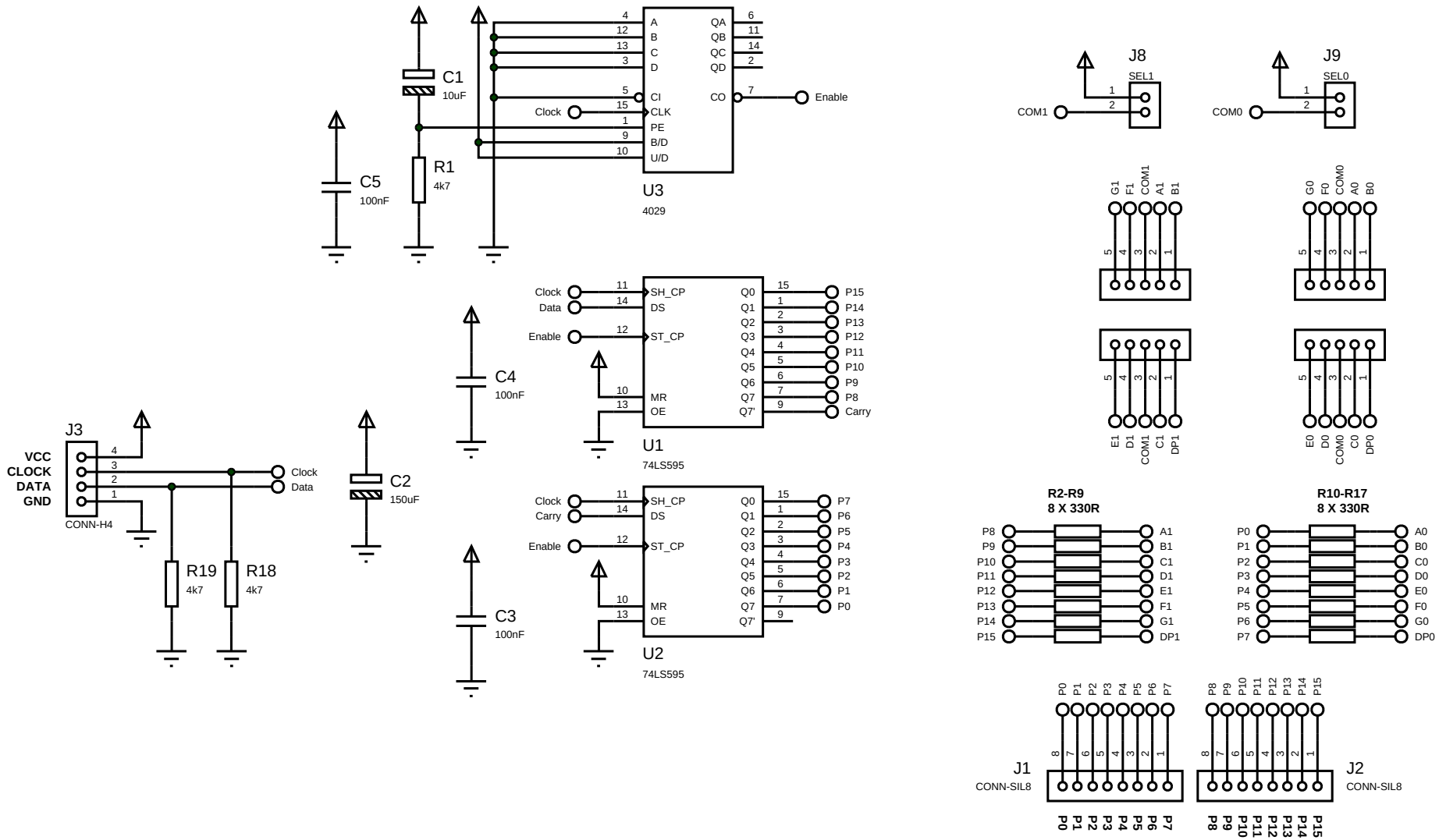

FILE NAME:	16Bits_Serial.dsn	DATE:	27/4/2017
DESIGN TITLE:	H:\AVR Studio\16bits\16Bits_Serial.dsn	PAGE:	1 of 1
PATH:	H:\AVR Studio\16bits\16Bits_Serial.dsn		
BY: <NONE>	REV:<NONE>	TIME:	11:44:27