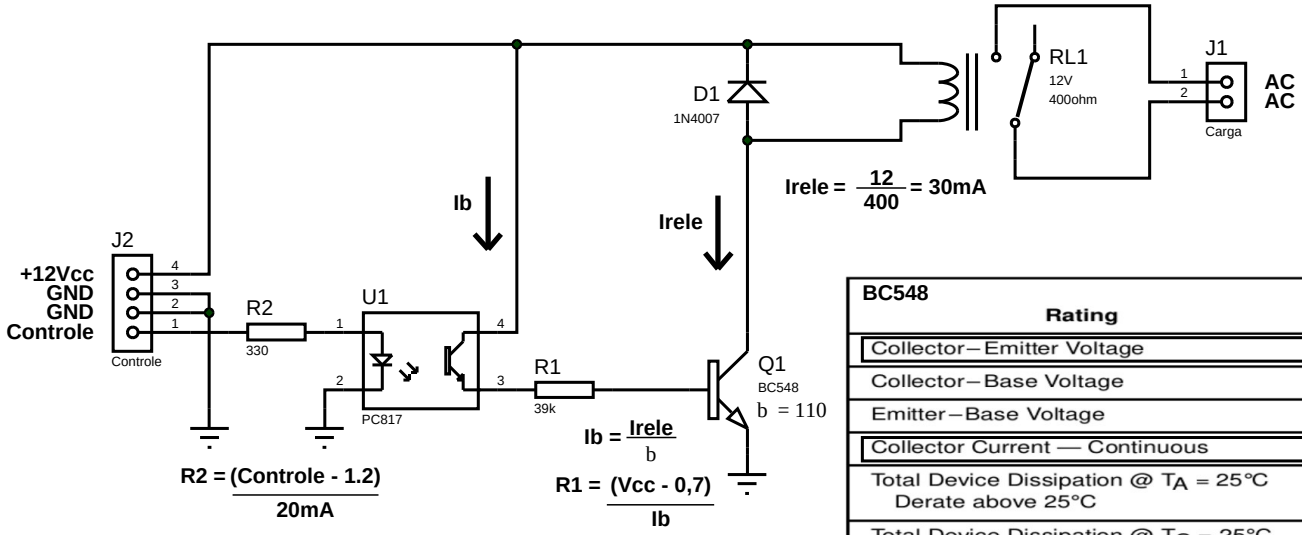

BC548 Rating	Symbol	BC 546	BC 547	BC 548	Unit
Collector–Emitter Voltage	V_{CEO}	65	45	30	Vdc
Collector–Base Voltage	V_{CBO}	80	50	30	Vdc
Emitter–Base Voltage	V_{EBO}	6.0			Vdc
Collector Current — Continuous	I_C	100			mAdc
Total Device Dissipation @ T_A = 25°C Derate above 25°C	P_D	625 5.0			mW mW/°C
Total Device Dissipation @ T_C = 25°C Derate above 25°C	P_D	1.5 12			Watt mW/°C
Operating and Storage Junction Temperature Range	T_J, T_{stg}	−55 to +150			°C

PC817	Parameter	Symbol	Condition	MIN.	TYP.	MAX.	Unit
Input	Forward voltage	V_F	I_F=20mA	-	1.2	1.4	V
	Peak forward voltage	V_{FM}	I_{FM}=0.5A	-	-	3.0	V
	Reverse current	I_R	V_R=4V	-	-	10	μA
	Terminal capacitance	C_t	V=0, f=1kHz	-	30	250	pF
Output	Dark current	I_{CEO}	V_{CE}=50V, I_F=0	-	-	100	nA
	Collector-emitter breakdown voltage	BV_{CEO}	I_c=0.1mA I_F=0	80	-	-	V
	Emitter-collector breakdown voltage	BV_{ECO}	I_E=10μA, I_F=0	6	-	-	V
Transfer charac-teristics	Collector current	I_c	I_F=5mA, V_{CE}=5V	2.5	-	30	mA
	Collector-emitter saturation voltage	$V_{CE(sat)}$	I_F=20mA I_c=1mA	-	0.1	0.2	V
	Isolation resistance	R_{ISO}	DC500V 40 to 60%RH	5×10^{10}	10^{11}	-	Ω
	Floating capacitance	C_f	V=0, f=1MHz	-	0.6	1.0	pF
	Cut-off frequency	f_c	V_{CE}=5V, I_c=2mA R_L=100Ω, -3dB	-	80	-	kHz
	Rise time	tr	V_{CE}=2V I_c=2mA R_L=100Ω	-	4	18	μs
	Fall time	t_f		-	3	18	μs

FILE NAME:	Relay_Shild.dsn	DATE:	31/3/2017
DESIGN TITLE:	D:\home\marcelo\Área de trabalho\Climatizador Sc		
PATH:	D:\home\marcelo\Área de trabalho\Climatizador\Schematics\Relay_Shild.cs	PAGE:	1 of 1
BY: <NONE>	REV:<NONE>	TIME:	08:39:03