2011 - MX-5 Service Highlights

- General Information
- Engine
- Body and Accessories

Service Highlights - General Information

2011 - MX-5

General Information

- VEHICLE IDENTIFICATION NUMBER (VIN) CODE
- VEHICLE IDENTIFICATION NUMBER (VIN)

Service Highlights - Engine

2011 - MX-5

Outline

- ENGINE ABBREVIATIONS [LF]
- ENGINE FEATURES [LF]
- ENGINE SPECIFICATIONS [LF (Except U.S.A., Canada and Mexico)]
- ENGINE SPECIFICATIONS [LF]

On-Board Diagnostics

- ON-BOARD DIAGNOSTIC OUTLINE [LF]
- ON-BOARD DIAGNOSTIC SYSTEM TEST MODE [LF]
- DTC DETECTION LOGIC AND CONDITIONS [LF]

Control System

- ENGINE CONTROL SYSTEM OUTLINE [LF]
- DRIVE-BY-WIRE CONTROL OUTLINE [LF]
- DRIVE-BY-WIRE CONTROL OPERATION [LF]

Service Highlights - Body and Accessories

2011 - MX-5

Outline

- BODY AND ACCESSORIES ABBREVIATIONS
- BODY AND ACCESSORIES NEW FEATURES

Instrumentation/Driver Info.

- INSTRUMENTATION/DRIVER INFO. OUTLINE
- INSTRUMENT CLUSTER SYSTEM WIRING DIAGRAM
- INSTRUMENT CLUSTER STRUCTURAL VIEW

2011 - MX-5 - Engine

ENGINE SPECIFICATIONS [LF (Except U.S.A., Canada and Mexico)]

Item				Specification	
				2011MY	2010MY
				LF (2.0L)	LF (2.0L)
MECHANICAL					
Type				DOHC-16 valves in-line, 4-cylinder	←
Combustion chamber				Pentroof	←
Displacement	(ml {cc, cu in})			1,999 {1,999, 122.0}	←
Bore × stroke	(mm {in})			87.5 × 83.1 {3.44 ×3.27}	←
Compression ratio				10:8	←
Compression pressure	(kPa {kgf/cm^2, psi} [rpm])			1,720 {17.54, 249.5} [300]	←
Valve timing	IN	Open	BTDC (°)	0—30	←
		Close	ABDC (°)	32—62	←
	EX	Open	BBDC (°)	42	←
		Close	ATDC (°)	5	←

Valve clearance		(mm {in})	IN	0.22—0.28 {0.0087—0.011} [Engine cold]	←
			EX	0.27—0.33 {0.0107—0.0129} [Engine cold]	←
LUBRICATION SYSTEM					
Type				Force-fed type	←
Oil pressure (reference value) [oil temperature: 100°C {212°F}]			(kPa {kgf/cm^2, psi} [rpm])	337—591 {3.44—6.03, 49.0—85.8} [3,000]	←
Oil pump	Type			Trochoid gear type	←
Oil filter	Type			Full-flow, paper element	←
	Bypass pressure		(kPa {kgf/cm^2, psi})	78—118 {0.80—1.20, 12.0—17.1}	←
Engine oil capacity (approx. quantity) [Without oil cooler]	Total (dry engine)		(L {US qt, Imp qt})	—	4.75 {5.02, 4.18}
	Oil replacement		(L {US qt, Imp qt})	—	4.05 {4.28, 3.56}
	Oil and oil filter replacement		(L {US qt, Imp qt})	—	4.45 {4.70, 3.92}
Engine oil capacity (approx. quantity) [With oil cooler]	Total (dry engine)		(L {US qt, Imp qt})	4.85 {5.12, 4.27}	←
	Oil replacement		(L {US qt, Imp qt})	4.05 {4.28, 3.56}	←
	Oil and oil filter replacement		(L {US qt, Imp qt})	4.55 {4.81, 4.00}	←
COOLING SYSTEM					
Type				Water-cooled, Electromotive	←
Coolant capacity (approx. quantity)			(L {US qt, Imp	7.5 {7.9, 6.6}	←

		qt})		
Water pump	Type		Centrifugal, V-ribbed belt-driven	←
Thermostat	Type		Wax, bottom-bypass	←
	Opening temperature	(°C {°F})	80—84 {176—183}	←
	Full-open temperature	(°C {°F})	97 {207}	←
	Full-open lift	(mm {in})	8.0 {0.31} or more	←
Radiator	Type		Corrugated fin	←
Cooling system cap	Cap valve opening pressure	(kPa {kgf/cm^2, psi})	93.2—122.6 {0.95—1.25, 13.5—17.8}	←
Cooling fan	Type		Electric	←
	Number of blades		5	←
	Outer diameter	(mm {in})	360 {14.2}	←
	Cooling fan motor output	(W)	120	←
FUEL SYSTEM				
Injector	Type		Hi-ohmic	←
	Type of fuel delivery		Top-feed	←
	Type of drive		Voltage	←
Pressure regulator control pressure		(kPa {kgf/cm^2, psi})	Approx. 390 {3.98, 56.6}	←
Fuel pump type			Electric	←
Fuel tank capacity		(L {US gal, Imp gal})	48.0 {12.7, 10.6}	←
Fuel type (Anti-knock index)			Premium unleaded fuel (95 or above)	←

EMISSION SYSTEM				
EGR type			Stepping motor	←
Catalyst form			WU-TWC (monolith), TWC (monolith)	←
Evaporative emission (EVAP) control system			Charcoal canister type	←
Positive crankcase ventilation (PCV) system			Closed type	←
CHARGING SYSTEM				
Battery	Voltage	(V)	12	←
	Type and capacity (5-hour rate)	(A·h)	46B24L (36)	←
Generator	Output	(V-A)	12-100	←
	Regulated voltage		Controlled by PCM	←
	Self diagnosis function			
IGNITION SYSTEM				
Ignition system	Type		SEI	←
	Spark advance		Electronic	←
	Firing order		1—3—4—2 (all cylinders independent firing)	←
			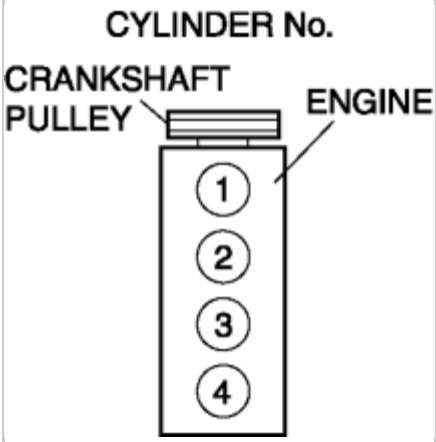	←

Spark plug	Type		L3G2 18 110, L3Y1 18 110	←
STARTING SYSTEM				
Starter	Type		Coaxial reduction	←
	Output	(kW)	1.4	←

Engine oil specification

Item	Specifications
Engine oil grade	API SG/SH/SJ/SL/SM or ILSAC GF–2/GF–3/GF–4
Engine oil viscosity	30, 40, 5W–30, 5W-40, 10W–30, 10W–40, 10W–50, 15W–40, 15W–50, 20W–40, 20W–50

< Previous **Next >**

Back to Top

© 2011 Mazda North American Operations, U.S.A.

Next >

2011 - MX-5 - Engine

ENGINE ABBREVIATIONS [LF]

ABDC	After Bottom Dead Center
AT	Automatic Transmission
ATDC	After Bottom Dead Center
BBDC	Before Bottom Dead Center
BTDC	Before Top Dead Center
CAN	Controller Area Network
CCM	Comprehensive Component Monitor
CM	Control Module
DC	Drive Cycle
DSC	Dynamic Stability Control
EX	Exhaust
HU	Hydraulic Unit
IN	Intake
KOEO	Key On Engine Off
KOER	Key On Engine Running
MT	Manual Transmission
OCV	Oil Control Valve

PCV	Positive Crankcase Ventilation
RAM	Random Access Memory
SEI	Single Electronic Ignition

Next >

Back to Top

© 2011 Mazda North American Operations, U.S.A.

2011 - MX-5 - Engine

ENGINE FEATURES [LF]

On-board Diagnostic

Improved serviceability	• DTC adopted

Control System

Improved driveability	• Drive-by-wire control changed

© 2011 Mazda North American Operations, U.S.A.

2011 - MX-5 - Engine

ENGINE SPECIFICATIONS [LF]

Item				Specification	
				2011MY	2010MY
MECHANICAL					
Type				DOHC-16 valves in-line, 4-cylinder	←
Combustion chamber				Pentroof	←
Displacement	(ml {cc, cu in})			1,999 {1,999, 122.0}	←
Bore × stroke	(mm {in})			87.5 × 83.1 {3.44 ×3.27}	←
Compression ratio				10:8	←
Compression pressure	(kPa {kgf/cm^2, psi} [rpm])			1,720 {17.54, 249.5} [300]	←
Valve timing	IN	Open	BTDC (°)	0—30	←
		Close	ABDC (°)	32—62	←
	EX	Open	BBDC (°)	42	←
		Close	ATDC (°)	5	←
Valve clearance	(mm {in})	IN		0.22—0.28 {0.0087—0.011} [Engine cold]	←

		EX	0.27—0.33 {0.0107—0.0129} [Engine cold]	←
LUBRICATION SYSTEM				
Type			Force-fed type	←
Oil pressure (reference value) [oil temperature: 100°C {212°F}]		(kPa {kgf/cm^2, psi} [rpm])	337—591 {3.44—6.03, 49.0—85.8} [3,000]	←
Oil pump	Type		Trochoid gear type	←
Oil filter	Type		Full-flow, paper element	←
	Bypass pressure	(kPa {kgf/cm^2, psi})	78—118 {0.80—1.20, 12.0—17.1}	←
Engine oil capacity (approx. quantity) [Without oil cooler]	Total (dry engine)	(L {US qt, Imp qt})	4.75 {5.02, 4.18}	←
	Oil replacement	(L {US qt, Imp qt})	4.05 {4.28, 3.56}	←
	Oil and oil filter replacement	(L {US qt, Imp qt})	4.45 {4.70, 3.92}	←
Engine oil capacity (approx. quantity) [With oil cooler]	Total (dry engine)	(L {US qt, Imp qt})	4.85 {5.12, 4.27}	←
	Oil replacement	(L {US qt, Imp qt})	4.05 {4.28, 3.56}	←
	Oil and oil filter replacement	(L {US qt, Imp qt})	4.55 {4.81, 4.00}	←
COOLING SYSTEM				
Type			Water-cooled, Electromotive	←
Engine coolant capacity [U.S.A. and Canada] (approx. quantity)		(L {US qt, Imp qt})	Manual transmission [M15M-D]: 7.3 {7.7, 6.4} Manual transmission [P66M-D]: 7.6 {8.0, 6.7} Automatic transmission [SJ6A-EL]: 7.2 {7.6, 6.3}	←

Engine coolant capacity [Except U.S.A. and Canada] (approx. quantity)		(L {US qt, Imp qt})	Manual transmission [P66M-D]: 7.6 {8.0, 6.7} Automatic transmission [SJ6A-EL]: 7.5 {7.9, 6.6}	←
Water pump	Type		Centrifugal, V-ribbed belt-driven	←
Thermostat	Type		Wax, bottom-bypass	←
	Opening temperature	(°C {°F})	80—84 {176—183}	←
	Full-open temperature	(°C {°F})	97 {207}	←
	Full-open lift	(mm {in})	8.0 {0.31} or more	←
Radiator	Type		Corrugated fin	←
Cooling system cap	Cap valve opening pressure	(kPa {kgf/cm^2, psi})	93.2—122.6 {0.95—1.25, 13.5—17.8}	←
Cooling fan	Type		Electric	←
	Number of blades		5	←
	Outer diameter	(mm {in})	360 {14.2}	←
	Cooling fan motor output	(W)	120	←
FUEL SYSTEM				
Injector	Type		Hi-ohmic	←
	Type of fuel delivery		Top-feed	←
	Type of drive		Voltage	←
Pressure regulator control pressure		(kPa {kgf/cm^2, psi})	Approx. 390 {3.98, 56.6}	←
Fuel pump type			Electric	←
Fuel tank capacity		(L {US gal, Imp gal})	48.0 {12.7, 10.6}	←

Fuel type (Anti-knock index)			Premium unleaded fuel 91 [(R+M)/2 method] or adove (96 RON or above)	←
EMISSION SYSTEM				
EGR type			Stepping motor	←
Catalyst form			WU-TWC (monolith), TWC (monolith)	←
Evaporative emission (EVAP) control system			Charcoal canister type	←
Positive crankcase ventilation (PCV) system			Closed type	←
CHARGING SYSTEM				
Battery	Voltage	(V)	12	←
	Type and capacity (5-hour rate)	(A·h)	46B24L (36)	←
Generator	Output	(V-A)	12-100	←
	Regulated voltage		Controlled by PCM	←
	Self diagnosis function			
IGNITION SYSTEM				
Ignition system	Type		SEI	←
	Spark advance		Electronic	←
	Firing order		1—3—4—2 (all cylinders independent firing)	←
				←

			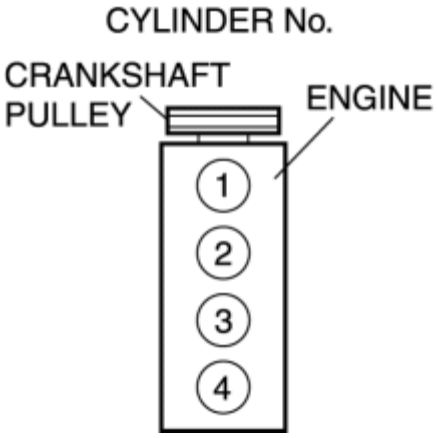	
Spark plug	Type		L3G2 18 110, L3Y1 18 110	←
STARTING SYSTEM				
Starter	Type		Coaxial reduction	←
	Output	(kW)	1.4	←

Engine oil specification

Item	U.S.A. and CANADA	Except U.S.A. and CANADA
Engine oil grade	(ILSAC)	(ILSAC)
		API SM or ILSAC
Engine oil viscosity	0W–20	5W–20 (If SAE 5W-20 engine oil is not available in your market, use SAE 5W-30 engine oil.)

© 2012 Mazda North American Operations, U.S.A.

Next >

2011 - MX-5 - General Information

VEHICLE IDENTIFICATION NUMBER (VIN) CODE

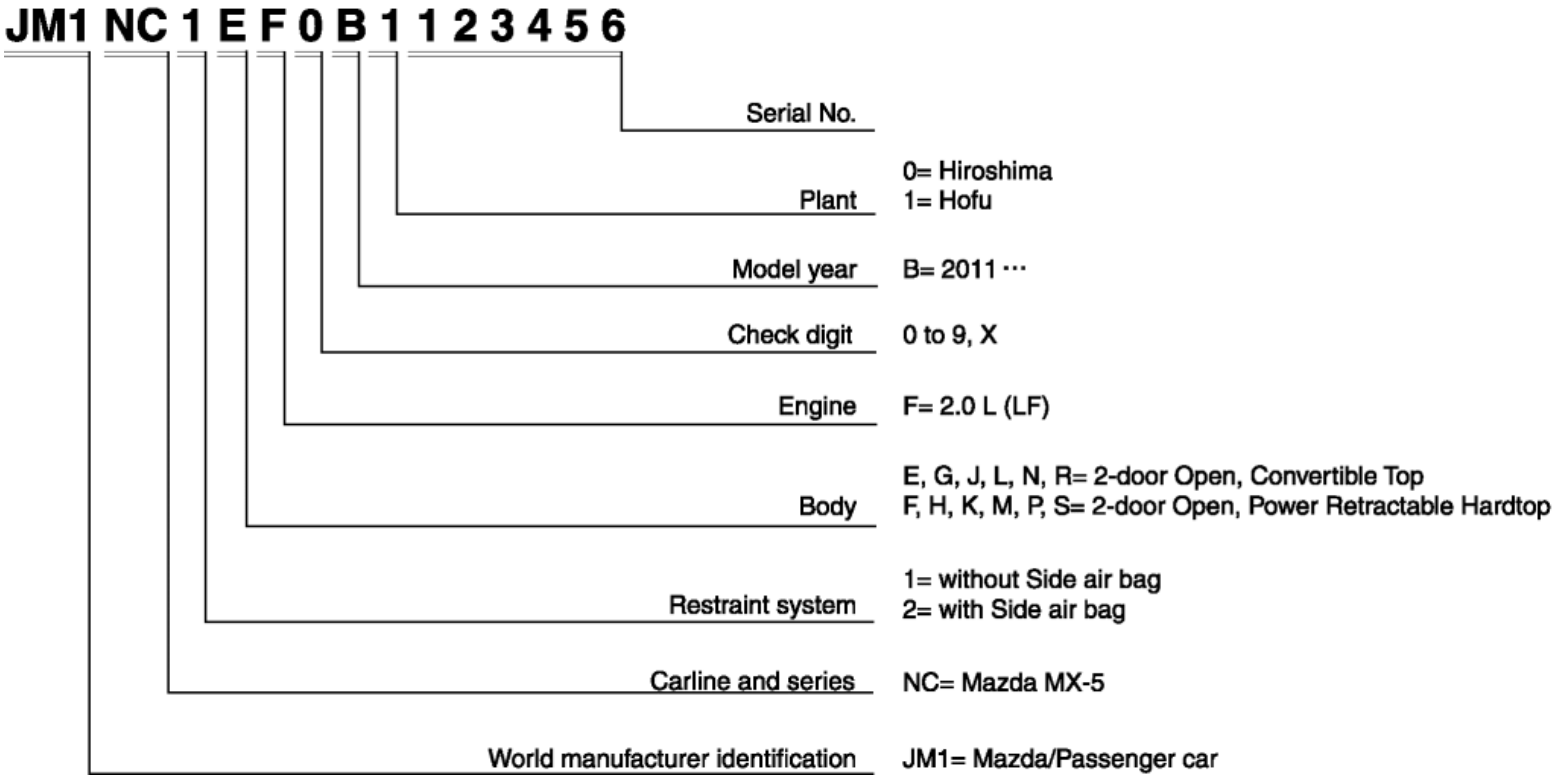

Next >

Back to Top

© 2011 Mazda North American Operations, U.S.A.

2011 - MX-5 - General Information

VEHICLE IDENTIFICATION NUMBER (VIN)

JM1 NC1*F*B# 200001—

JM1 NC2*F*B# 200001—

© 2011 Mazda North American Operations, U.S.A.

2011 - MX-5 - Engine

ON-BOARD DIAGNOSTIC OUTLINE [LF]

Features

Improved serviceability	• DTC adopted

© 2011 Mazda North American Operations, U.S.A.

2011 - MX-5 - Engine

ON-BOARD DIAGNOSTIC SYSTEM TEST MODE [LF]

Sending Emission-related Malfunction Code

- The DTCs are shown below.

×: Applicable—: Not applicable

DTC No.		Condition	MIL	Generator warning light	DC	Monitor item	Self test type*1	Memory function
2011MY	2010MY							
B1342	←	PCM malfunction	OFF	OFF	—	—	C, O	—
P0011	←	CMP timing over-advanced	ON	OFF	1	CCM	C, R	×
P0012	←	CMP timing over-retarded	ON	OFF	2	CCM	C, R	×
P0016	←	CKP-CMP correlation	ON	OFF	2	CCM	C	×
P0030	←	A/F sensor heater control circuit problem	ON	OFF	2	A/F sensor heater, HO2S heater	C, O, R	×
P0031	←	A/F sensor heater circuit low input	ON	OFF	2	A/F sensor heater, HO2S heater	C, O, R	×
P0032	←	A/F sensor heater circuit high input	ON	OFF	2	A/F sensor heater, HO2S heater	C, O, R	×
P0037	←	HO2S heater circuit low input	ON	OFF	2	A/F sensor heater, HO2S heater	C, O, R	×
P0038	←	HO2S heater circuit high input	ON	OFF	2	A/F sensor heater, HO2S heater	C, O, R	×
P0053	←	A/F sensor heater resistance	ON	OFF	2	A/F sensor heater, HO2S heater	C, R	×
P0054	←	HO2S heater resistance	ON	OFF	2	A/F sensor heater,	C, R	×

						HO2S heater		
P0069	←	Manifold absolute pressure/atmospheric pressure correlation	ON	OFF	2	CCM	C	×
P0101	←	MAF sensor circuit range/performance problem	ON	OFF	2	CCM	C	×
P0102	←	MAF sensor circuit low input	ON	OFF	1	CCM	C, O, R	×
P0103	←	MAF sensor circuit high input	ON	OFF	1	CCM	C, O, R	×
P0107	←	MAP sensor circuit low input	ON	OFF	1	CCM	C, O, R	×
P0108	←	MAP sensor circuit high input	ON	OFF	1	CCM	C, O, R	×
P0111	←	IAT sensor circuit range/performance problem	ON	OFF	2	CCM	C	×
P0112	←	IAT sensor circuit low input	ON	ON	1	CCM	C, O, R	×
P0113	←	IAT sensor circuit high input	ON	ON	1	CCM	C, O, R	×
P0116	←	Engine coolant temperature circuit range/performance problem	ON	OFF	1	Engine cooling system	C	×
P0117	←	ECT sensor circuit low input	ON	OFF	1	Engine cooling system	C, O, R	×
P0118	←	ECT sensor circuit high input	ON	OFF	1	Engine cooling system	C, O, R	×
P0122	←	TP sensor No.1 circuit low input	ON	OFF	1	CCM	C, O, R	×
P0123	←	TP sensor No.1 circuit high input	ON	OFF	1	CCM	C, O, R	×
P0125	←	Excessive time to enter closed loop fuel control	ON	OFF	2	Engine cooling system	C	×

P0126	←	Coolant thermostat stuck open	ON	OFF	2	Engine cooling system	C	×
P0128	←		ON	OFF	2	Engine cooling system	C	×
P0130	←	A/F sensor circuit problem	ON	OFF	2	A/F sensor, HO2S	C, O, R	×
P0131	←	A/F sensor circuit low input	ON	OFF	2	A/F sensor, HO2S	C, O, R	×
P0132	←	A/F sensor circuit high input	ON	OFF	2	A/F sensor, HO2S	C, O, R	×
P0133	←	A/F sensor circuit problem	ON	OFF	2	A/F sensor, HO2S	C	×
P0134	←	A/F sensor no activity detected	ON	OFF	2	A/F sensor, HO2S	C, R	×
P0137	←	HO2S circuit low input	ON	OFF	2	A/F sensor, HO2S	C, O, R	×
P0138	←	HO2S circuit high input	ON	OFF	2	A/F sensor, HO2S	C, O, R	×
P0139	←	HO2S circuit slow response	ON	OFF	2	A/F sensor, HO2S	C	×
P0140	←	HO2S no activity detected	ON	OFF	2	A/F sensor, HO2S	C, R	×
P0171	←	Fuel trim system too lean	ON	OFF	2	Fuel system	C, R	×
P0172	←	Fuel trim system too rich	ON	OFF	2	Fuel system	C, R	×
P0222	←	TP sensor No.2 circuit low input	ON	OFF	1	CCM	C, O, R	×
P0223	←	TP sensor No.2 circuit high input	ON	OFF	1	CCM	C, O, R	×
P0300	←	Random misfire detected	Flash/ON	OFF	2	Misfire	C, R	×
P0301	←	Cylinder No.1 misfire detected	Flash/ON	OFF	2	Misfire	C, R	×
P0302	←	Cylinder No.2 misfire detected	Flash/ON	OFF	2	Misfire	C, R	×
P0303	←	Cylinder No.3 misfire detected	Flash/ON	OFF	2	Misfire	C, R	×

P0304	←	Cylinder No.4 misfire detected	Flash/ON	OFF	2	Misfire	C, R	×
P0327	←	KS circuit low input	ON	OFF	1	CCM	C, O, R	×
P0328	←	KS circuit high input	ON	OFF	1	CCM	C, O, R	×
P0335	←	CKP sensor circuit problem	ON	OFF	1	CCM	C	×
P0340	←	CMP sensor circuit problem	ON	OFF	1	CCM	C	×
P0401	←	EGR flow insufficient detected	ON	OFF	2	EGR system	C, R	×
P0403	←	EGR valve (stepping motor) circuit problem	ON	OFF	2	CCM	C, O, R	×
P0421	←	Warm up catalyst system efficiency below threshold	ON	OFF	2	Catalyst	C	×
P0441	←	EVAP system incorrect purge flow	ON	OFF	2	EVAP system	C, R	×
P0442	←	EVAP system leak detected (small leak)	ON	OFF	2	EVAP system	C, R	×
P0443	←	Purge solenoid valve circuit problem	ON	OFF	2	CCM	C, O, R	×
P0446	←	Change over valve (COV) (EVAP system leak detection pump) stuck close	ON	OFF	2	CCM	C, R	×
P0455	←	EVAP system leak detected (gross leak/no flow)	ON	OFF	2	EVAP system	C, R	×
P0456	←	EVAP system leak detected (very small leak)	ON	OFF	2	EVAP system	C, R	×
P0461	←	Fuel gauge sender unit range/performance problem	ON	OFF	2	CCM	C	×
P0462	←	Fuel gauge sender unit circuit low input	ON	OFF	2	CCM	C, O, R	×
P0463	←	Fuel gauge sender unit circuit high input	ON	OFF	2	CCM	C, O, R	×

P0480	←	Cooling fan relay No.1 control circuit malfunction	OFF	OFF	1	Other	C, O, R	×
P0481	←	Cooling fan relay No.2 control circuit malfunction	OFF	OFF	1	Other	C, O, R	×
P0482	←	Cooling fan relay No.3 control circuit malfunction	OFF	OFF	1	Other	C, O, R	×
P0500	←	VSS circuit problem	ON	OFF	2	CCM	C	×
P0505	←	Idle speed control system problem	OFF	OFF	—	—	R	—
P0506	←	Idle speed control system RPM lower than expected	ON	OFF	2	CCM	C	×
P0507	←	Idle speed control system RPM higher than expected	ON	OFF	2	CCM	C	×
P050A	←	Cold start idle air control system performance problem	ON	OFF	2	Cold start emission reduction strategy monitoring	C, R	×
P050B	←	Cold start ignition timing performance problem	ON	OFF	2	Cold start emission reduction strategy monitoring	C, R	×
P0550	←	PSP switch circuit malfunction	ON	OFF	2	CCM	C	×
P0564 *2	←	Cruise control switch circuit malfunction	OFF	OFF	1	Other	C	×
P0571	←	Brake switch circuit problem	OFF	OFF	1	Other	C	×
P0601	←	PCM memory check sum error	ON	OFF	1	CCM	C, O, R	×
P0602	←	PCM programming error	ON	OFF	1	CCM	C, O, R	×
P0604	←	PCM random access memory (RAM) error	ON	OFF	1	CCM	C, O, R	×
P0606	←	PCM processor error	ON	OFF	1	CCM	C, O, R	×

P0610	←	PCM vehicle options error	ON	OFF	1	CCM	C, O, R	×
P0638	←	Throttle valve actuator control circuit range/performance problem	ON	OFF	1	CCM	C	×
P0661	←	Variable intake air solenoid valve circuit low input	OFF	OFF	1	Other	C, O, R	×
P0662	←	Variable intake air solenoid valve circuit high input	OFF	OFF	1	Other	C, O, R	×
P0685	←	Main relay control circuit open	ON	OFF	2	CCM	C	×
P06B8	←	Internal control module non-volatile random access memory error	ON	OFF	1	CCM	C, O, R	×
P0703	←	Brake switch input circuit problem	ON	OFF	2	CCM	C	×
P0704 *3	←	CPP switch input circuit problem	ON	OFF	2	CCM	C	×
P0850 *3	←	Neutral switch input circuit problem	ON	OFF	2	CCM	C	×
P1260	←	Immobilizer system problem	OFF	OFF	—	—	C, O	—
P2004	←	Variable tumble shutter valve stuck open	ON	OFF	2	CCM	C, R	×
P2006	←	Variable tumble shutter valve stuck closed	ON	OFF	2	CCM	C, R	×
P2009	←	Variable tumble solenoid valve circuit low input	ON	OFF	2	CCM	C, O, R	×
P2010	←	Variable tumble solenoid valve circuit high input	ON	OFF	2	CCM	C, O, R	×
P2088	←	OCV circuit low input	ON	OFF	1	CCM	C, O, R	×
P2089	←	OCV circuit high input	ON	OFF	1	CCM	C, O, R	×
P2096	←	Target A/F feedback system too	ON	OFF	2	Fuel system	C	×

		lean						
P2097	←	Target A/F feedback system too rich	ON	OFF	2	Fuel system	C	×
P2101	←	Throttle valve actuator circuit range/performance problem	ON	OFF	1	CCM	C, R	×
P2107	←	Throttle valve actuator control module processor error	ON	OFF	1	CCM	C, R	×
P2108	←	Throttle valve actuator control module performance error	ON	OFF	1	CCM	C, R	×
P2109	←	TP sensor minimum stop range/performance problem	ON	OFF	1	CCM	C, R	×
P2112	←	Throttle valve actuator control system range/performance problem	ON	OFF	1	CCM	C, R	×
P2119	←	Throttle valve actuator control throttle body range/performance problem	ON	OFF	2	CCM	C, R	×
P2122	←	APP sensor No.1 circuit low input	ON	OFF	1	CCM	C, O, R	×
P2123	←	APP sensor No.1 circuit high input	ON	OFF	1	CCM	C, O, R	×
P2127	←	APP sensor No.2 circuit low input	ON	OFF	1	CCM	C, O, R	×
P2128	←	APP sensor No.2 circuit high input	ON	OFF	1	CCM	C, O, R	×
P2135	←	TP sensor No.1/No.2 voltage correlation problem	ON	OFF	1	CCM	C, O, R	×
P2138	←	APP sensor No.1/No.2 voltage correlation problem	ON	OFF	1	CCM	C, O, R	×
N/A	P2195	A/F sensor signal stuck lean	ON	OFF	2	A/F sensor, HO2S	C	×
N/A	P2196	A/F sensor signal stuck rich	ON	OFF	2	A/F sensor, HO2S	C	×

P2228	←	BARO sensor circuit low input	ON	OFF	1	CCM	C, O, R	×
P2229	←	BARO sensor circuit high input	ON	OFF	1	CCM	C, O, R	×
P2299	N/A	Accelerator pedal: spring back malfunction	OFF	OFF	1	Other	C, R	×
P2401	←	EVAP system leak detection pump motor circuit low input	ON	OFF	2	CCM	C, R	×
P2402	←	EVAP system leak detection pump motor circuit high input	ON	OFF	2	CCM	C, R	×
P2404	←	EVAP system leak detection pump sense circuit problem	ON	OFF	2	CCM	C, R	×
P2405	←	EVAP system leak detection pump sense circuit low input	ON	OFF	2	CCM	C, R	×
P2502	←	Charging system voltage problem	OFF	ON	1	Other	C, R	×
P2503	←	Charging system voltage low input	OFF	ON	1	Other	C, R	×
P2504	←	Charging system voltage high input	OFF	ON	1	Other	C, R	×
P2507	←	PCM battery voltage low input	ON	OFF	1	CCM	C, O, R	×
P2610	←	PCM internal engine off timer performance problem	ON	OFF	2	CCM	C	×

*1

C: CMDTC self test, O: KOEO self test, R: KOER self test

*2

With cruise control system

*3

MT

< Previous Next >

Back to Top

© 2011 Mazda North American Operations, U.S.A.

2011 - MX-5 - Engine

DTC DETECTION LOGIC AND CONDITIONS [LF]

- The detection condition of the following DTC has been adopted from 2010MY.

  P2299 Accelerator pedal: spring back malfunction

- Brake override system operates.

Back to Top

© 2011 Mazda North American Operations, U.S.A.

2011 - MX-5 - Engine

ENGINE CONTROL SYSTEM OUTLINE [LF]

Features

Improved driveability	• Drive-by-wire control changed

Back to Top

© 2011 Mazda North American Operations, U.S.A.

2011 - MX-5 - Engine

DRIVE-BY-WIRE CONTROL OUTLINE [LF]

Control List

Control name	Control Outline
Brake override system	• If the brake pedal is depressed with the accelerator pedal depressed, the vehicle can be stopped safely by closing the throttle valve. As a result, the brake operation takes priority over the accelerator pedal operation.

© 2011 Mazda North American Operations, U.S.A.

2011 - MX-5 - Engine

DRIVE-BY-WIRE CONTROL OPERATION [LF]

Brake Override System

Operation of brake override system

- In the event of any malfunction in the accelerator system, the vehicle is equipped with a sub-system that prioritizes the brake operation over the accelerator pedal operation. Specifically, the sub-system functions to close throttle valve when the brake pedal is depressed while the accelerator pedal is depressed to safely decelerate the vehicle to a full stop.

Brake override operation conditions	• If any of the following conditions are met with the accelerator pedal and the brake pedal depressed together for 1 s or more, the PCM adjusts the throttle valve opening angle so that the engine speed is approx. 1,100 rpm. **While driving vehicle** ▪ Accelerator pedal opening angle: 5% or more from fully-closed ▪ Vehicle speed: 10 km/h {6.2 mph} or more ▪ In gear ▪ Engine speed: 1,150 rpm or more **While vehicle stopped** ▪ Accelerator pedal opening angle: 5% or more from fully-closed ▪ Shift lever position: neutral (MT) ▪ Selector lever position: N position (AT) ▪ Engine speed: 1,150 rpm or more
End brake override operation	• To return the throttle to normal operation, the following conditions must be met. ▪ Accelerator pedal is not depressed ▪ Brake pedal is not depressed

	NOTE: • Cycling the key off and back on will also end brake override operation.

Disabling of brake override system

- If the servicing procedure requiring the brake pedal and the accelerator pedal to be depressed together, operation of the brake override system can be prevented, if necessary.

Disable brake override operation conditions	• If the following conditions are met for 10 s within 30 s after switching the ignition ON (engine off), the brake override system is disabled until the activate brake override operation conditions are met. ▪ Vehicle speed: 0 km/h {0 mph} ▪ Accelerator pedal fully depressed ▪ Brake pedal depressed
Activate brake override operation conditions	• Cycling the key off and back on will activate the brake override operation conditions.

Brake warning light illumination request (vehicles without malfunction warning light)

- If the following condition is met, the PCM sends the brake warning light illumination request signal to the instrument cluster. The brake warning light illuminates to alert the driver that there is a malfunction in the brake system.
  - Brake switch No. 1 or 2 malfunction is detected

Malfunction warning light illumination request (vehicles with malfunction warning light)

- If the following condition is met, the PCM sends the malfunction warning light illumination request signal to the instrument cluster. The malfunction warning light illuminates to alert the driver that there is a malfunction in the brake system.
  - Brake switch No. 1 or 2 malfunction is detected

< Previous

Back to Top

© 2012 Mazda North American Operations, U.S.A.

Next >

2011 - MX-5 - Body and Accessories

BODY AND ACCESSORIES ABBREVIATIONS

ABS	Antilock Brake System
CM	Control Module
DSC	Dynamic Stability Control
HU	Hydraulic Unit
PCM	Powertrain Control Module

Next >

Back to Top

© 2012 Mazda North American Operations, U.S.A.

2011 - MX-5 - Body and Accessories

BODY AND ACCESSORIES NEW FEATURES

Improved safety	• Brake override system has been adopted.

Back to Top

© 2012 Mazda North American Operations, U.S.A.

2011 - MX-5 - Body and Accessories

INSTRUMENT CLUSTER SYSTEM WIRING DIAGRAM

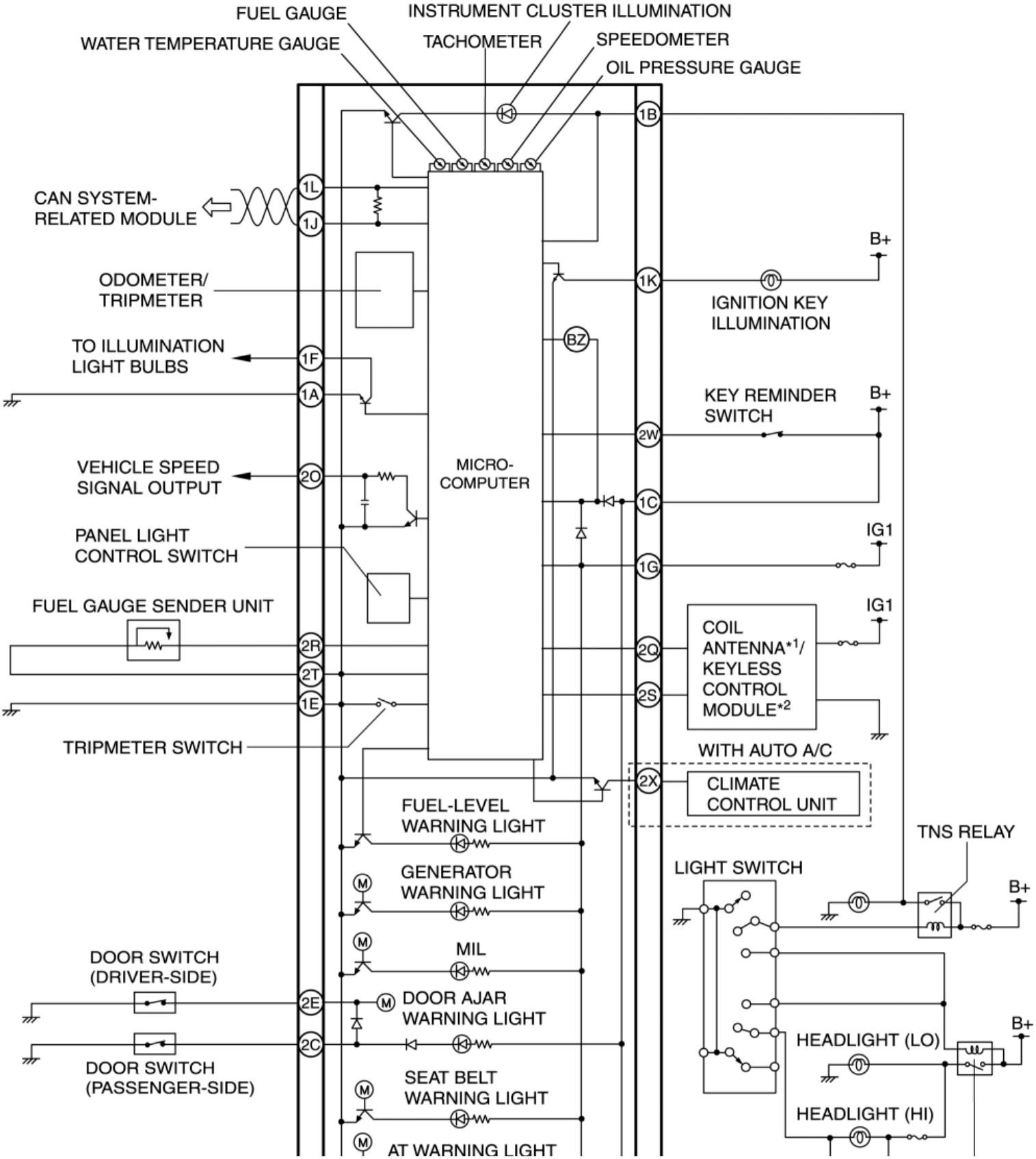

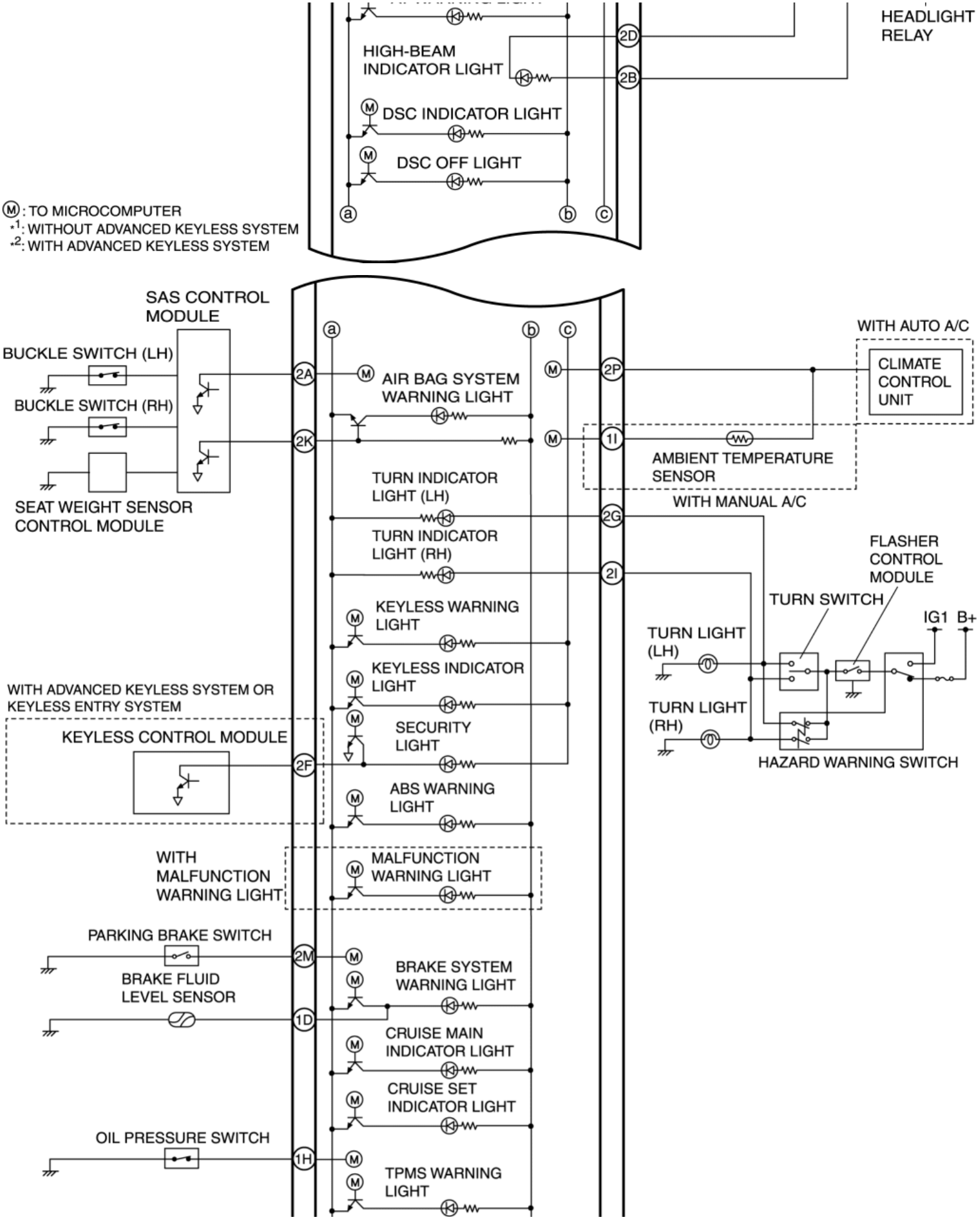
HEADLIGHT RELAY
HIGH-BEAM INDICATOR LIGHT
DSC INDICATOR LIGHT
DSC OFF LIGHT
2D
2B
a
b
c
M : TO MICROCOMPUTER
*1: WITHOUT ADVANCED KEYLESS SYSTEM
*2: WITH ADVANCED KEYLESS SYSTEM
SAS CONTROL MODULE
BUCKLE SWITCH (LH)
BUCKLE SWITCH (RH)
SEAT WEIGHT SENSOR CONTROL MODULE
2A
2K
AIR BAG SYSTEM WARNING LIGHT
TURN INDICATOR LIGHT (LH)
TURN INDICATOR LIGHT (RH)
KEYLESS WARNING LIGHT
KEYLESS INDICATOR LIGHT
SECURITY LIGHT
ABS WARNING LIGHT
WITH ADVANCED KEYLESS SYSTEM OR KEYLESS ENTRY SYSTEM
KEYLESS CONTROL MODULE
2F
WITH MALFUNCTION WARNING LIGHT
MALFUNCTION WARNING LIGHT
PARKING BRAKE SWITCH
2M
BRAKE FLUID LEVEL SENSOR
1D
BRAKE SYSTEM WARNING LIGHT
CRUISE MAIN INDICATOR LIGHT
CRUISE SET INDICATOR LIGHT
OIL PRESSURE SWITCH
1H
TPMS WARNING LIGHT
2P
WITH AUTO A/C
CLIMATE CONTROL UNIT
1I
AMBIENT TEMPERATURE SENSOR
WITH MANUAL A/C
2G
2I
FLASHER CONTROL MODULE
TURN SWITCH
IG1
B+
TURN LIGHT (LH)
TURN LIGHT (RH)
HAZARD WARNING SWITCH

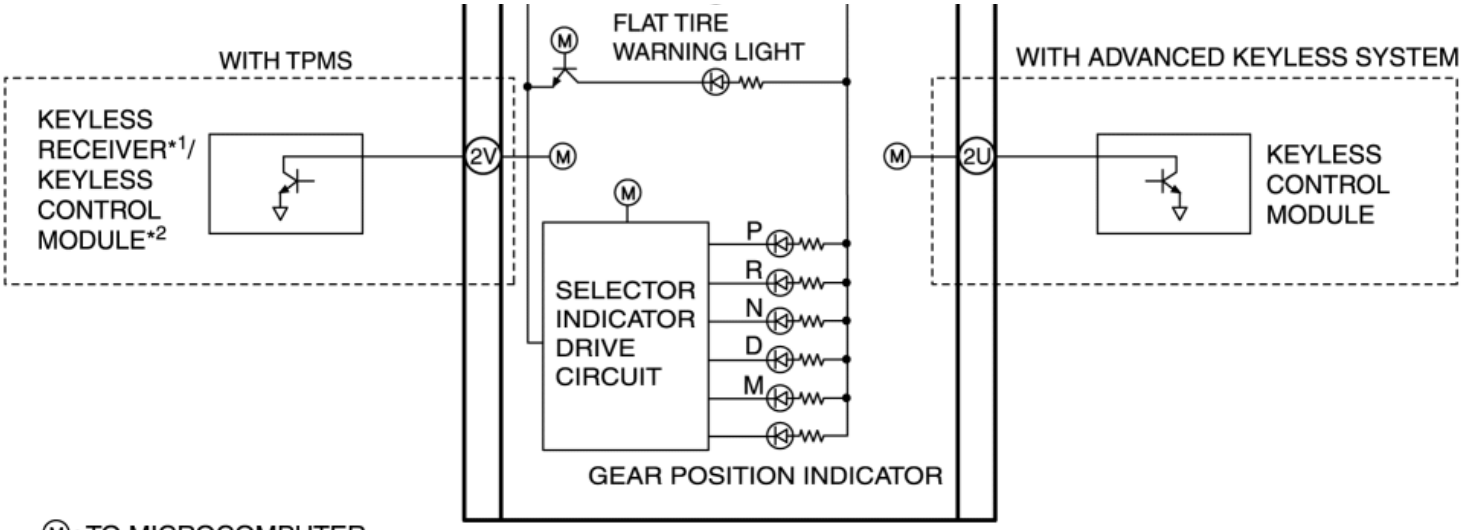

Ⓜ: TO MICROCOMPUTER
*1: WITHOUT ADVANCED KEYLESS SYSTEM AND KEYLESS ENTRY SYSTEM
*2: WITH ADVANCED KEYLESS SYSTEM OR KEYLESS ENTRY SYSTEM

< Previous Next >

Back to Top

© 2012 Mazda North American Operations, U.S.A.

2011 - MX-5 - Body and Accessories

INSTRUMENTATION/DRIVER INFO. OUTLINE

Improved safety	• Brake override system has been adopted. • Malfunction warning light adopted. (with malfunction warning light)

© 2012 Mazda North American Operations, U.S.A.

< Previous

2011 - MX-5 - Body and Accessories

INSTRUMENT CLUSTER STRUCTURAL VIEW

Meter And Gauge

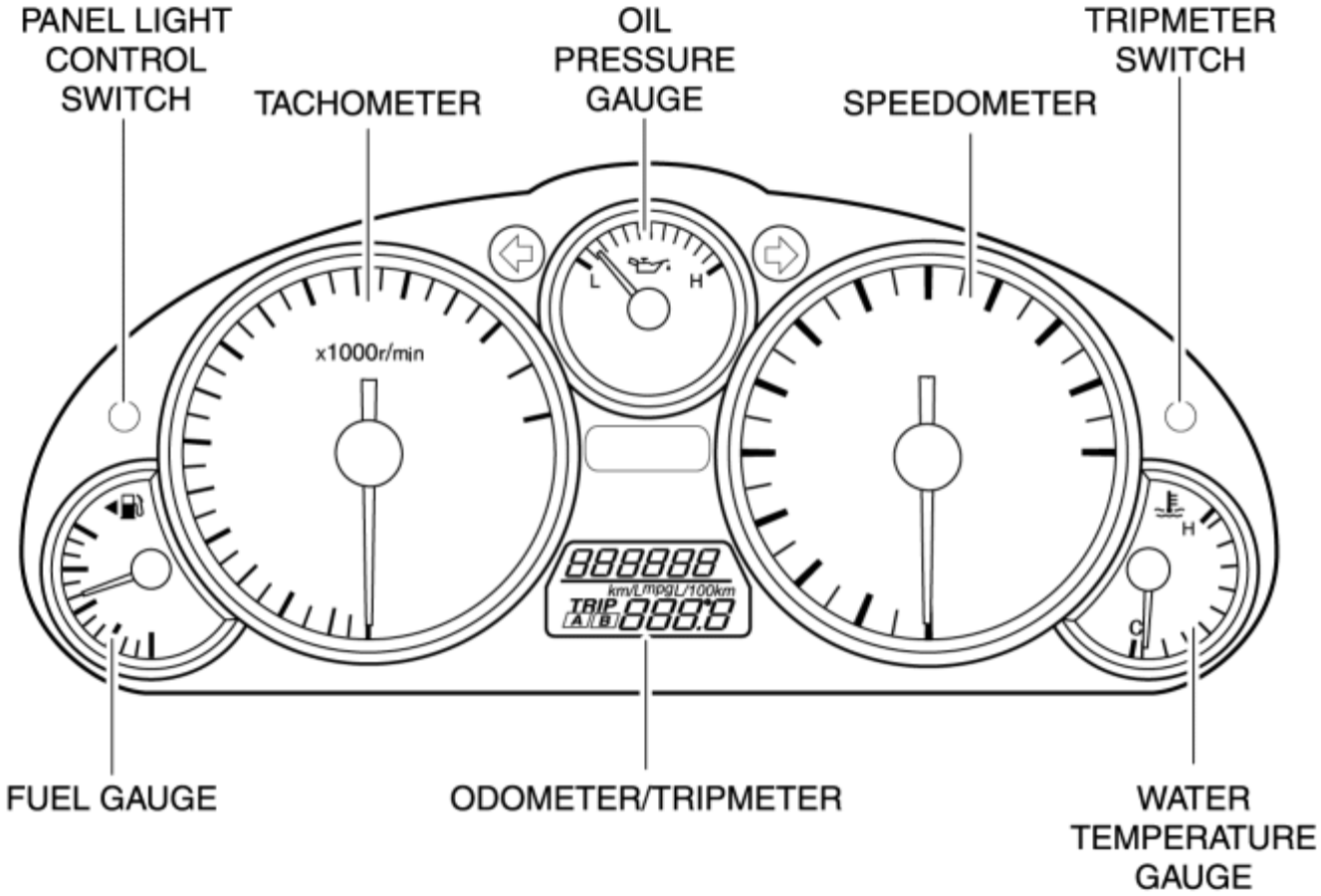

Warning And Indicator Light

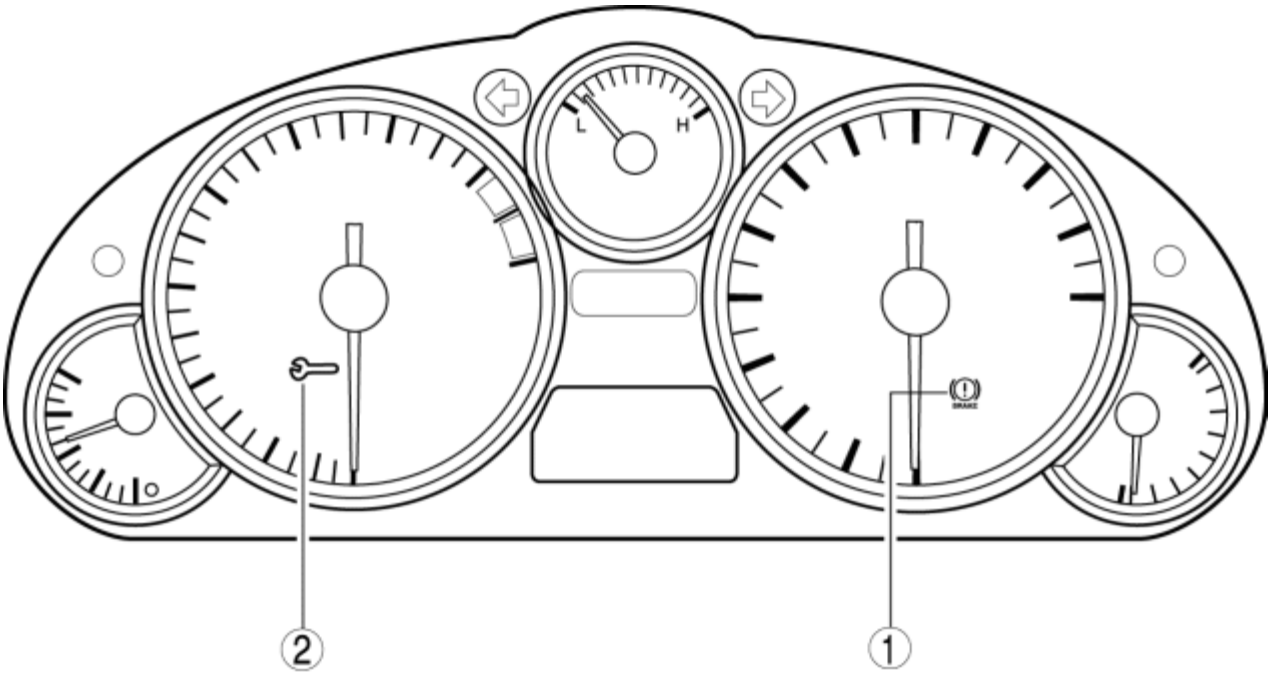

×: Applicable—: Not applicable

No.	Warning and indicator light	Input signal source	CAN system	Description	Note
1	Brake system warning light	PCM	×	Brake system warning light illumination request. (See **DRIVE-BY-WIRE CONTROL OPERATION [LF]**.)	—
		• DSC HU/CM • ABS HU/CM	×	If the ABS/DSC system is malfunctioning, the brake system warning light remains illuminated.	—
		• Parking brake switch • Brake fluid level sensor	—	• When the parking brake is operating, the brake system warning light illuminates. • When the brake fluid level is low, the brake system warning light illuminates.	—
2	Malfunction warning light	PCM	×	Malfunction warning light illumination request. (See **DRIVE-BY-WIRE CONTROL OPERATION [LF]**.)	With malfunction warning light

© 2012 Mazda North American Operations, U.S.A.