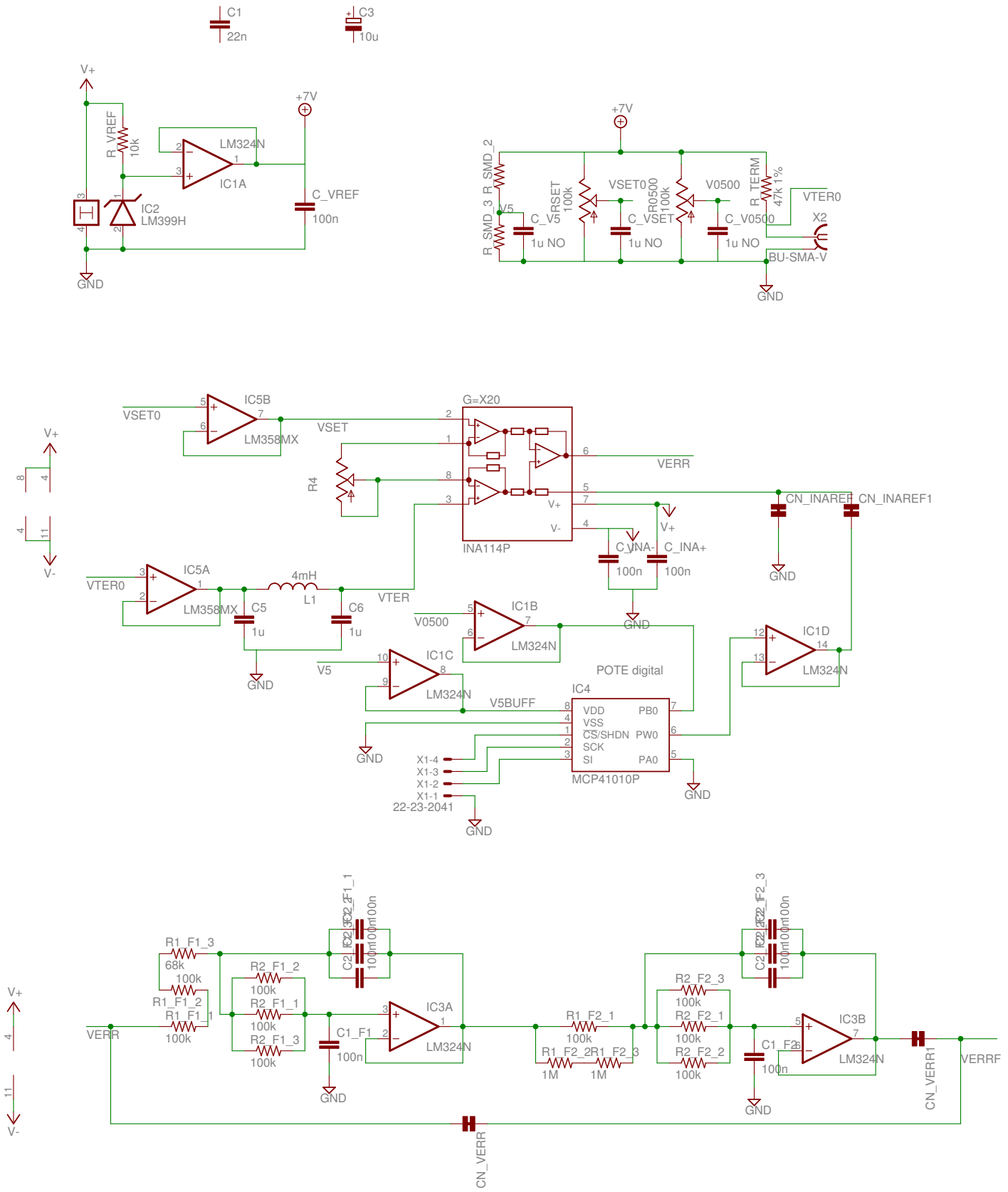
C1
22n
C3
10u
V+
+7V
R_VREF
10k
LM324N
IC1A
IC2
LM399H
C_VREF
100n
GND
R_SMD_2
R_SMD_3
V5
C_V5
1u NO
VRSET
100k
VSET0
C_VSET
VR0500
100k
V0500
C_V0500
R_TERM
47k 1%
VTER0
X2
BU-SMA-V
IC5B
LM358MX
G=X20
INA114P
VSET
VERR
R4
CN_INAREF
CN_INAREF1
C_INA-
C_INA+
100n
IC5A
4mH
L1
C5
1u
C6
VTER
IC1B
IC1C
IC1D
V-
POTE digital
IC4
VDD
VSS
CS/SHDN
SCK
SI
PB0
PW0
PA0
MCP41010P
V5BUFF
X1-4
X1-3
X1-2
X1-1
22-23-2041
R1_F1_3
68k
R1_F1_2
R1_F1_1
R2_F1_2
R2_F1_1
R2_F1_3
C1_F1
IC3A
R1_F2_1
R1_F2_2
R1_F2_3
1M
R2_F2_3
R2_F2_1
R2_F2_2
C1_F2
IC3B
VERRF
CN_VERR1
CN_VERR

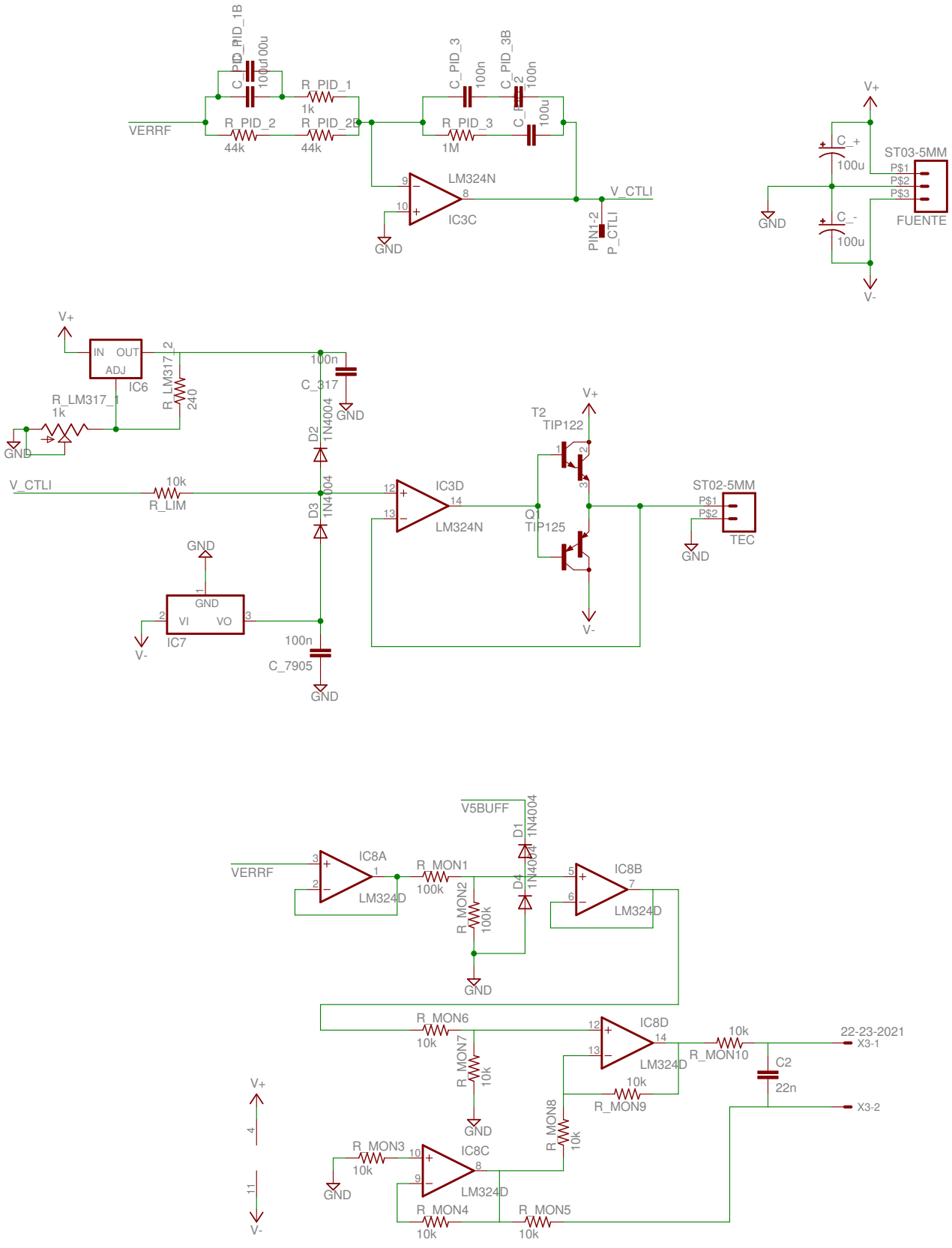
C_PID_1B
100u
C_PID_1
100u
R_PID_1
1k
VERRF
R_PID_2
44k
R_PID_2B
44k
C_PID_3
100n
C_PID_3B
100n
R_PID_3
1M
C_PID_2
100u
LM324N
IC3C
GND
V_CTLI
PIN1-2
P_CTLI
V+
C_+
100u
ST03-5MM
P$1
P$2
P$3
FUENTE
GND
C_-
100u
V-
V+
IN
OUT
ADJ
IC6
R_LM317_2
240
R_LM317_1
1k
GND
100n
C_317
GND
D2
1N4004
V_CTLI
10k
R_LIM
D3
1N4004
IC3D
LM324N
T2
TIP122
V+
Q
TIP125
V-
ST02-5MM
P$1
P$2
TEC
GND
GND
GND
VI
VO
IC7
V-
100n
C_7905
GND
V5BUFF
D1
1N4004
D4
1N4004
IC8A
LM324D
VERRF
R_MON1
100k
R_MON2
100k
GND
IC8B
LM324D
R_MON6
10k
R_MON7
10k
GND
IC8D
LM324D
10k
R_MON10
C2
22n
22-23-2021
X3-1
X3-2
10k
R_MON9
R_MON8
10k
V+
4
11
V-
R_MON3
10k
GND
IC8C
LM324D
R_MON4
10k
R_MON5
10k