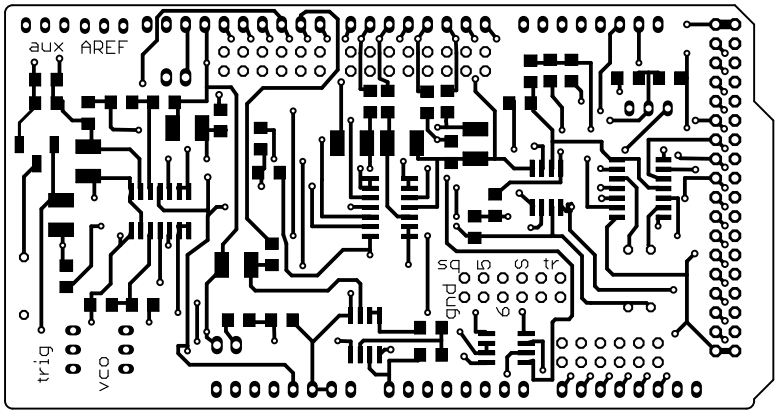
aux
AREF
trig
vco
gnd
J1
S09
G09
bs

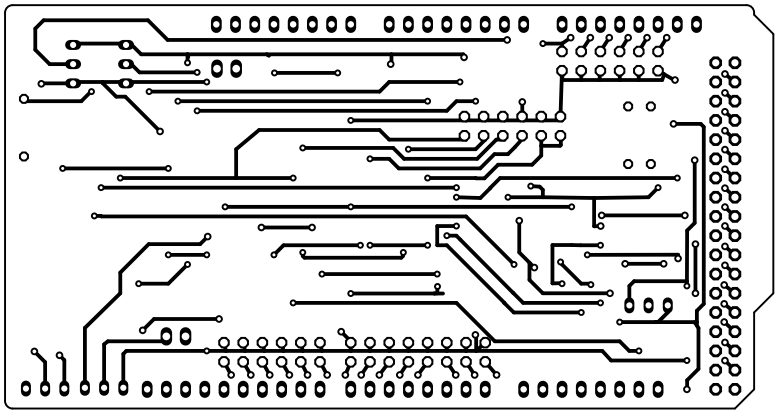

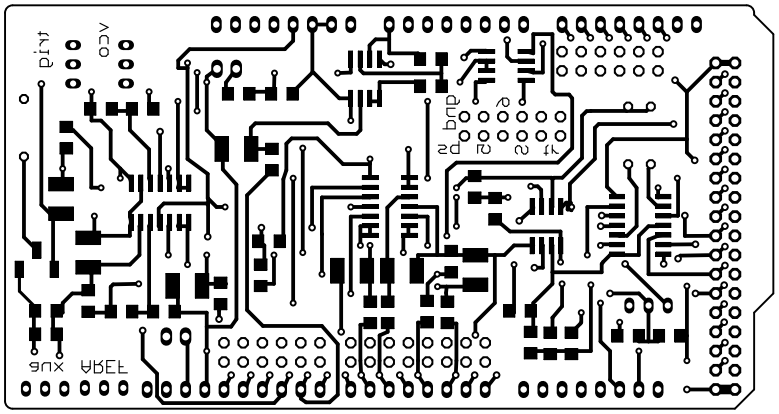
aux
AREF
pint
vco
J1
S2
G2
D2
dug