Display connector

Wire harness housing:

H17	JST	PHR-8
H18	JST	PHR-8
H19	JST	01SPHSPH-26L-150
H20	JST	01SPHSPH-26L-150
H21	JST	01SPHSPH-26L-150
H22	JST	01SPHSPH-26L-150
H23	JST	01SPHSPH-26L-150
H24	JST	01SPHSPH-26L-150
H25	JST	01SPHSPH-26L-150
H52	JST	01SPHSPH-26L-150

LCD display:

H13	Waveshare	18366

Display SMD spacers and fasteners:

H26	1	9774030151R	H34	M2.5x4
H27	1	9774030151R	H35	M2.5x4
H28	1	9774030151R	H36	M2.5x4
H29	1	9774030151R	H37	M2.5x4

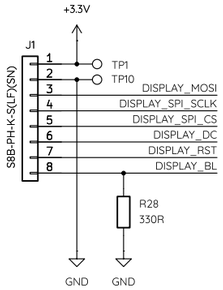

USB-C and battery connector

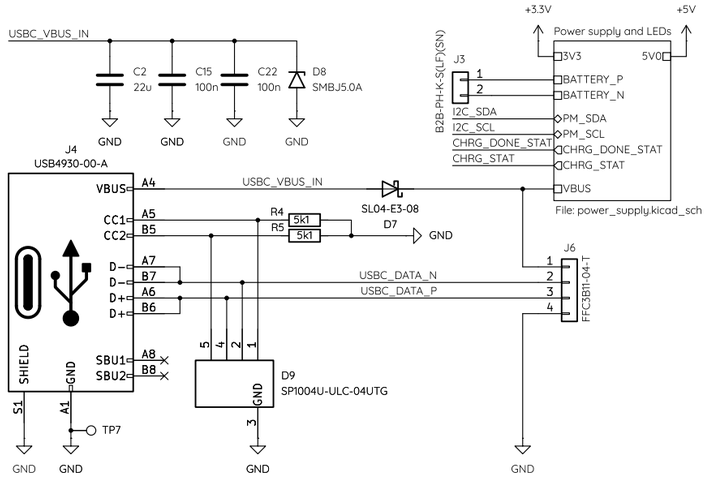

Li-Po battery:

H15		10304

Wire harness housing:

H50	JST	PHR-2
H48	JST	SPH-002T-P0.5S
H49	JST	SPH-002T-P0.5S

LED indicators

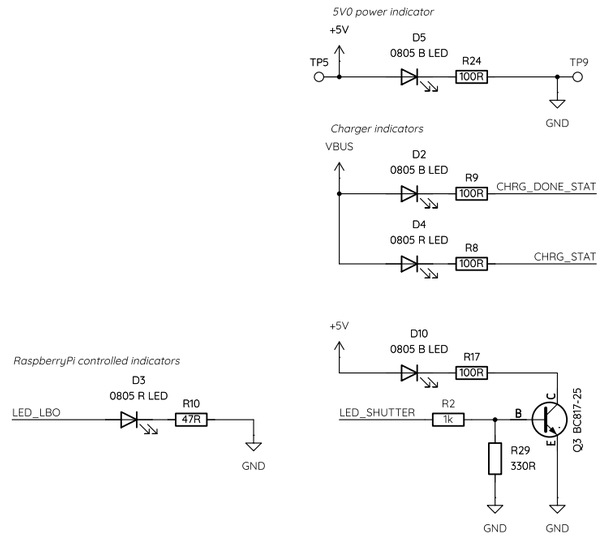

Accelerometer

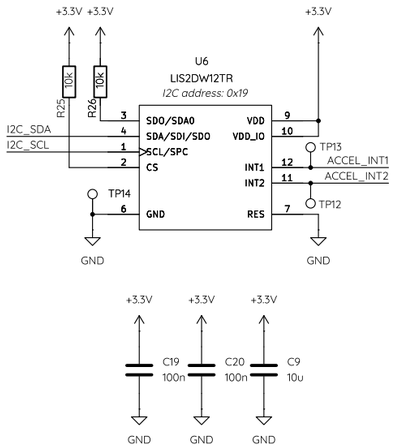

Raspberry Pi header

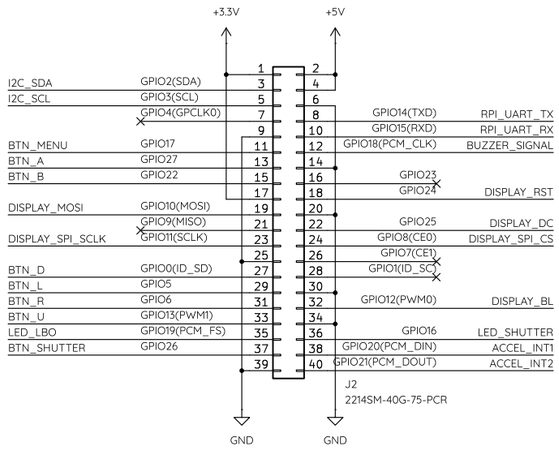

Camera module:

H14		Odseven ODS105

RaspberryPi:

H16		Raspberry Pi Zero 2 W

RaspberryPi spacers:

H30	1	9774100151R	H40	M2.5x8
H31	1	9774100151R	H41	M2.5x8
H32	1	9774100151R	H42	M2.5x8
			H43	M2.5x8
			H53	M2.5 nut

GND

H33	MountingHole
H38	MountingHole
H39	MountingHole
H51	MountingHole

Buttons

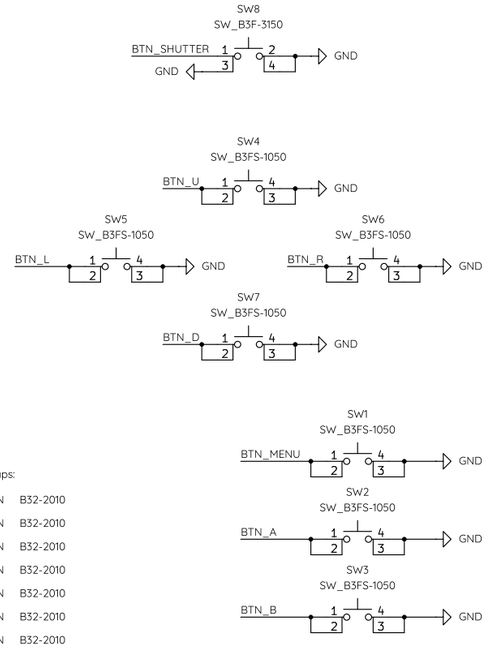

Tact switch caps:

H1	OMRON	B32-2010
H2	OMRON	B32-2010
H3	OMRON	B32-2010
H4	OMRON	B32-2010
H5	OMRON	B32-2010
H6	OMRON	B32-2010
H7	OMRON	B32-2010
H8	OMRON	B32-2010

Mechanicals

Threaded casing inserts:

H9	BOSSARD	1386735	H44	M2.5x12
H10	BOSSARD	1386735	H45	M2.5x12
H11	BOSSARD	1386735	H46	M2.5x12
H12	BOSSARD	1386735	H47	M2.5x12

Buzzer

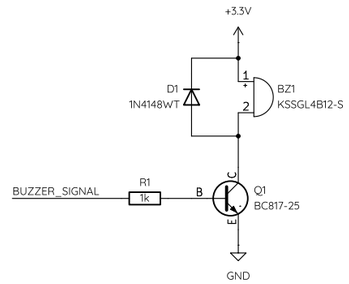

Debug

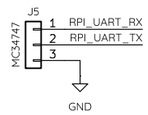

GitHub:
https://github.com/marchmare/snaphat-pcb

Sheet: /
File: main_board.kicad_sch

Title: SnapHAT main board

Size: A3	Date: 2026-04-16	Rev: 1.1
KiCad E.D.A. 9.0.0		Id: 1/2

Battery protection and monitor

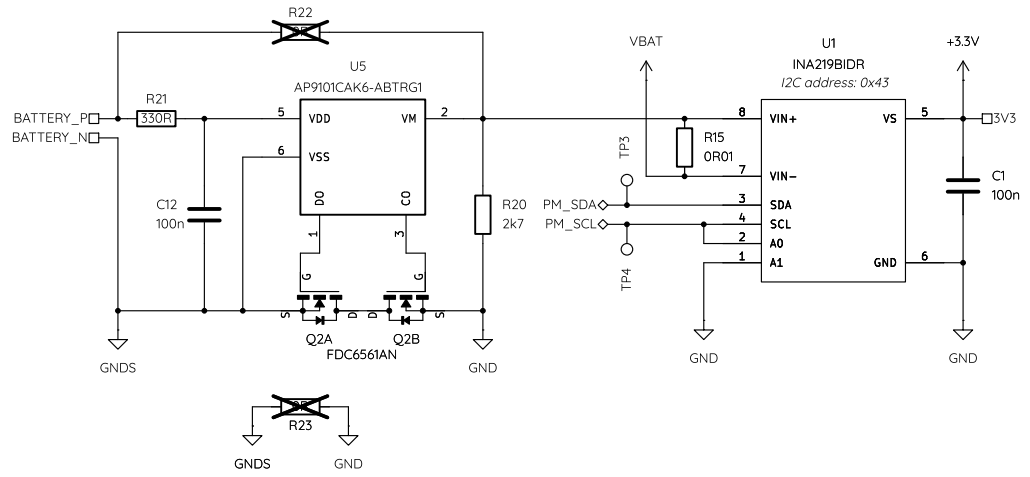

DC-DC boost regulator

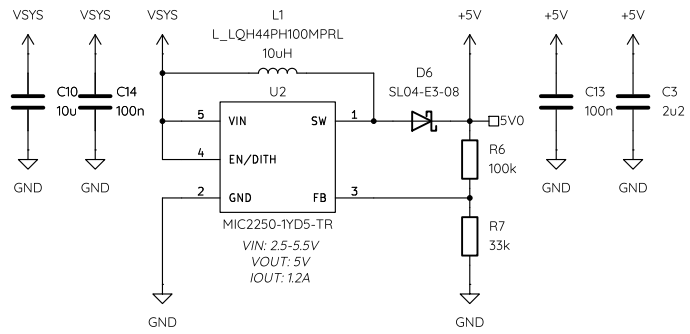

Battery charger

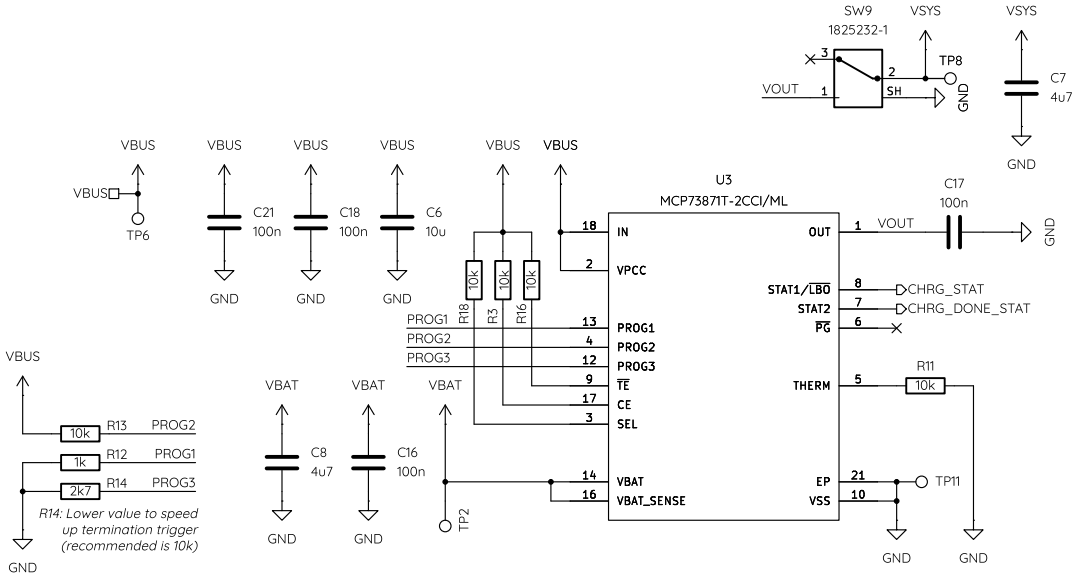

GitHub:
https://github.com/marchmare/snaphat-pcb

Sheet: /Power supply and LEDs/
File: power_supply.kicad_sch

Title: SnapHAT main board

Size: A4	Date: 2026-02-22	**Rev: 1.1**
KiCad E.D.A. 9.0.0		Id: 2/2