Display connector

Wire harness housing:

H17	JST	PHR-8
H18	JST	PHR-8
H19	JST	01SPHSPH-26L-150
H20	JST	01SPHSPH-26L-150
H21	JST	01SPHSPH-26L-150
H22	JST	01SPHSPH-26L-150
H23	JST	01SPHSPH-26L-150
H24	JST	01SPHSPH-26L-150
H25	JST	01SPHSPH-26L-150
H52	JST	01SPHSPH-26L-150

LCD display:

H13	Waveshare	18366

Display SMD spacers:

H26	9774030151R		H53	KRAFTBERG	M2.5x5
H27	9774030151R		H54	KRAFTBERG	M2.5x5
H28	9774030151R		H55	KRAFTBERG	M2.5x5
H29	9774030151R		H56	KRAFTBERG	M2.5x5

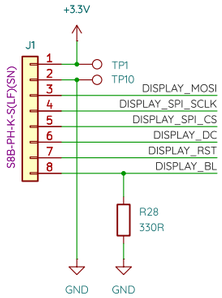

USB-C and battery connector

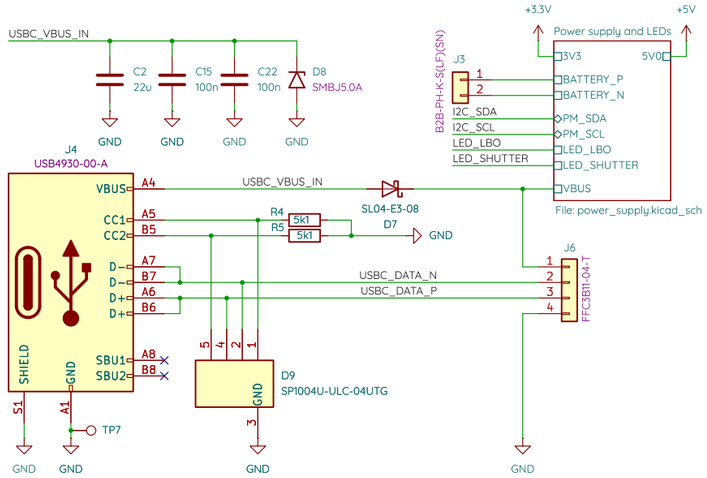

Li-Po battery:

H15	10304	

Wire harness housing:

H50	JST	PHR-2
H48	JST	SPH-002T-P0.5S
H49	JST	SPH-002T-P0.5S

USB OTG extension board

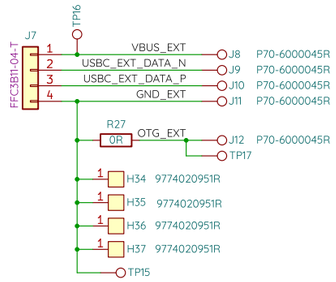

FFC cable:

H57	GCT	10-04-D-0030-C-4-08-4-T

Accelerometer

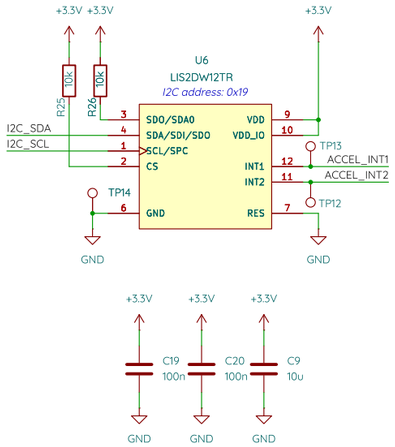

Raspberry Pi header

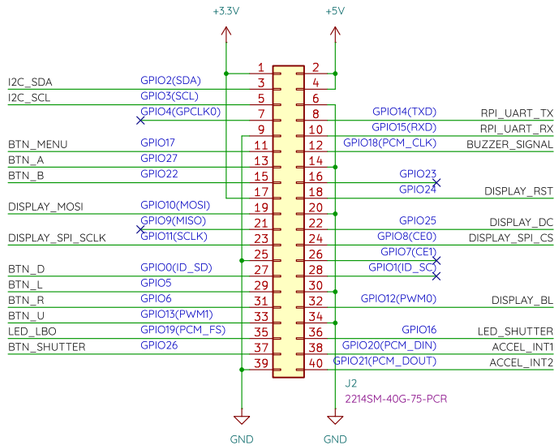

Camera module:

H14	Odseven	ODS105

RaspberryPi:

H16	Raspberry Pi Zero 2 W	

RaspberryPi spacers:

H30	9774100151R		H40	KRAFTBERG	M2.5x8
H31	9774100151R		H41	KRAFTBERG	M2.5x8
H32	9774100151R		H42	KRAFTBERG	M2.5x8
			H43	KRAFTBERG	M2.5x8

H33	MountingHole
H38	MountingHole
H39	MountingHole
H51	MountingHole

Buttons

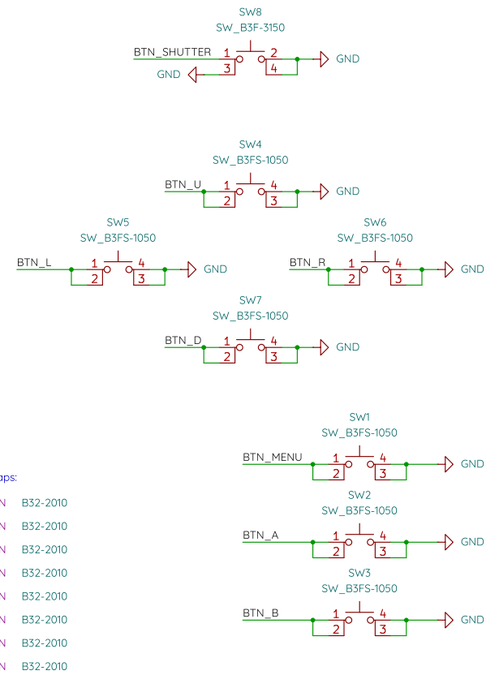

Tact switch caps:

H1	OMRON	B32-2010
H2	OMRON	B32-2010
H3	OMRON	B32-2010
H4	OMRON	B32-2010
H5	OMRON	B32-2010
H6	OMRON	B32-2010
H7	OMRON	B32-2010
H8	OMRON	B32-2010

Mechanicals

Threaded casing inserts:

H9	Bossard	1386735	H44	KRAFTBERG	M2.5x12
H10	Bossard	1386735	H45	KRAFTBERG	M2.5x12
H11	Bossard	1386735	H46	KRAFTBERG	M2.5x12
H12	Bossard	1386735	H47	KRAFTBERG	M2.5x12

Buzzer

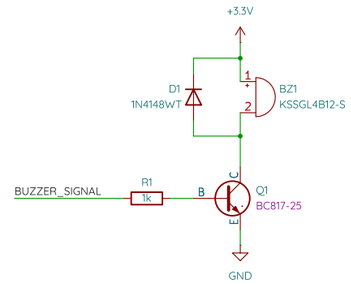

Debug

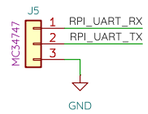

GitHub:
https://github.com/marchmare/snaphat-hw

Sheet: /
File: snaphat.kicad_sch

Title: SnapHAT

Size: A3	Date: 2026-02-22	Rev: 1.1
KiCad E.D.A. 9.0.0		Id: 1/2

Battery protection and monitor

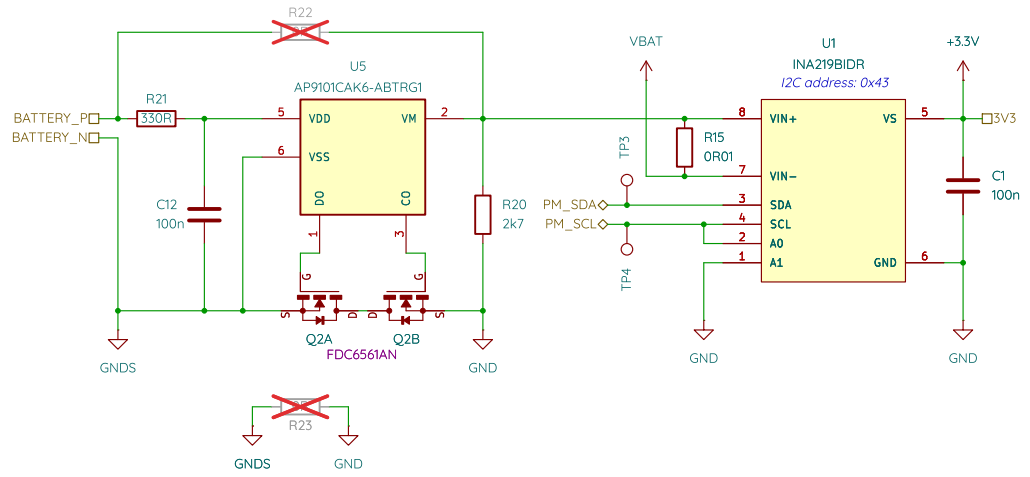

DC-DC boost regulator

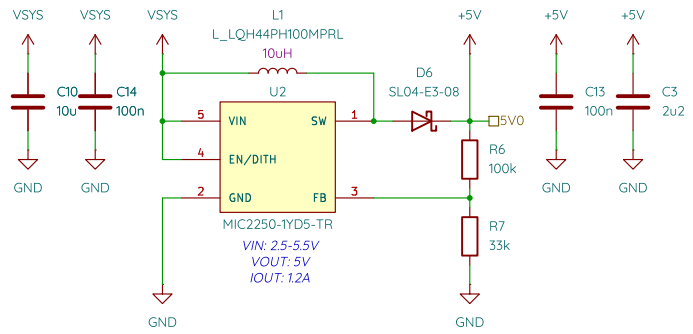

Battery charger

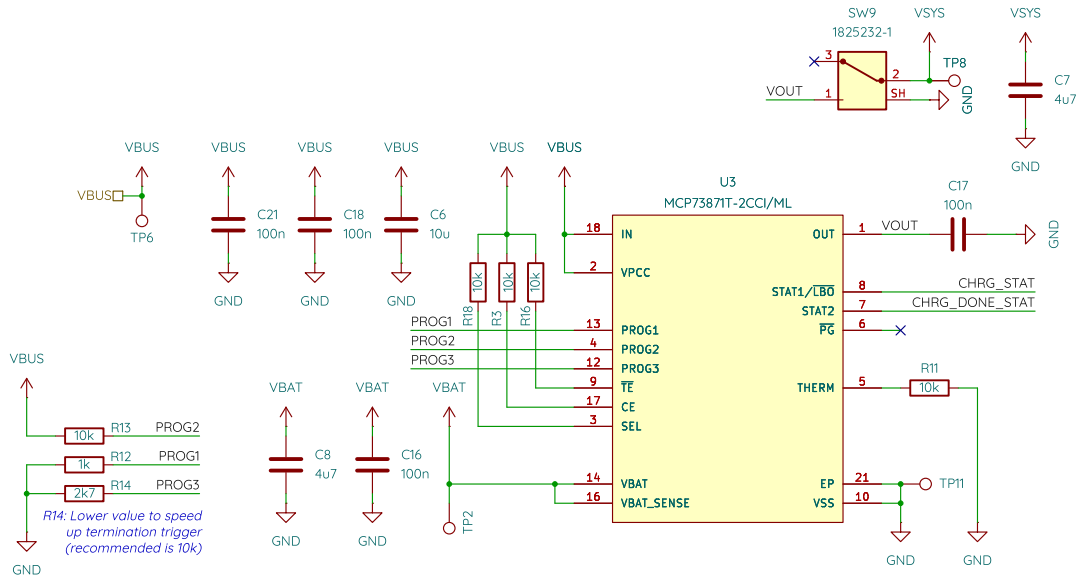

LED indicators

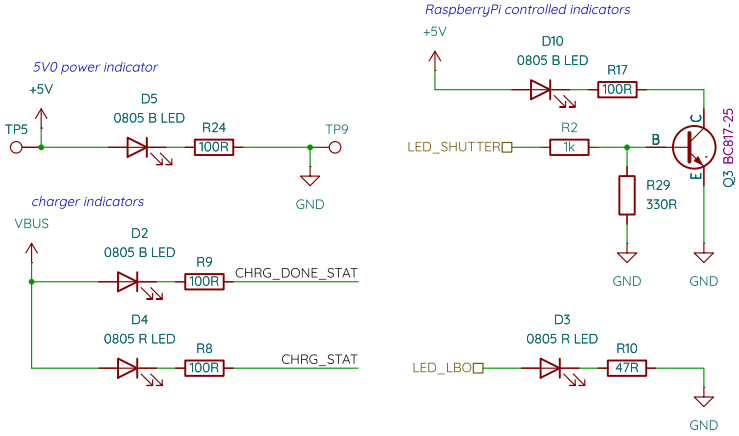

GitHub:
https://github.com/marchmare/snaphat-hw

Sheet: /Power supply and LEDs/
File: power_supply.kicad_sch

Title: SnapHAT

Size: A4	Date: 2026-02-22	Rev: 1.1
KiCad E.D.A. 9.0.0		Id: 2/2