Raspberry Pi header

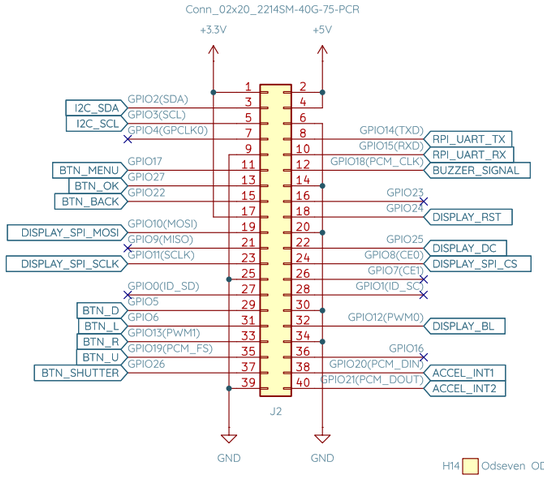

Battery connector, protection and monitor

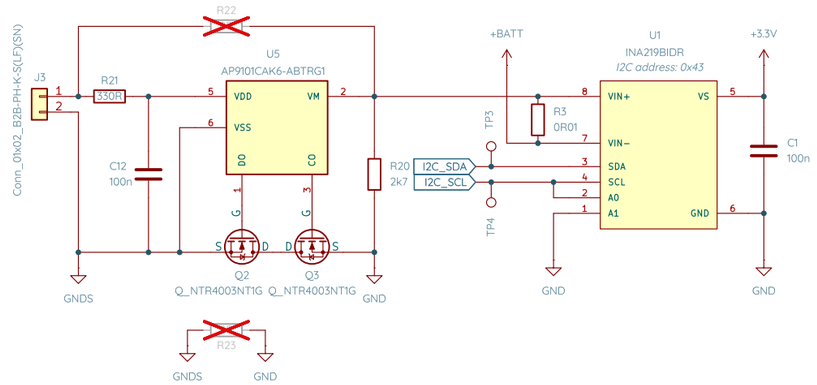

DC-DC boost regulator

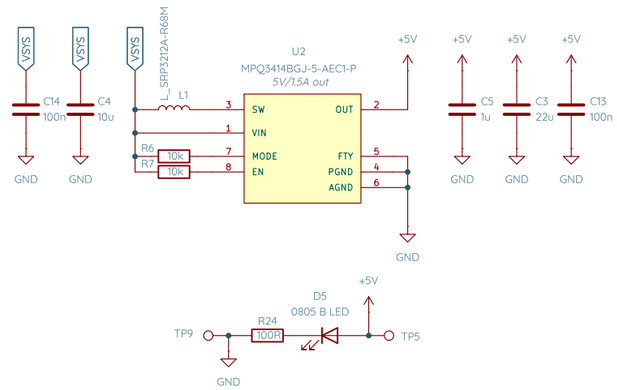

Buzzer

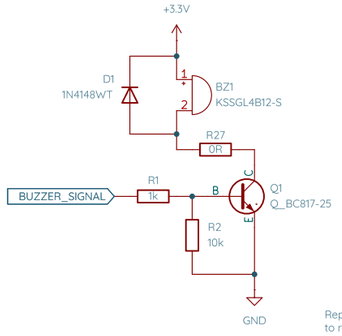

Display connector

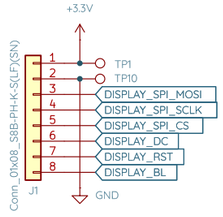

LCD display:
H13 Waveshare 18366

Wire harness housing:
H17 PHR-8
H18 SPH-002T-P0.5S
H19 SPH-002T-P0.5S
H20 SPH-002T-P0.5S
H21 SPH-002T-P0.5S
H22 SPH-002T-P0.5S
H23 SPH-002T-P0.5S
H24 SPH-002T-P0.5S
H25 SPH-002T-P0.5S

Battery charger

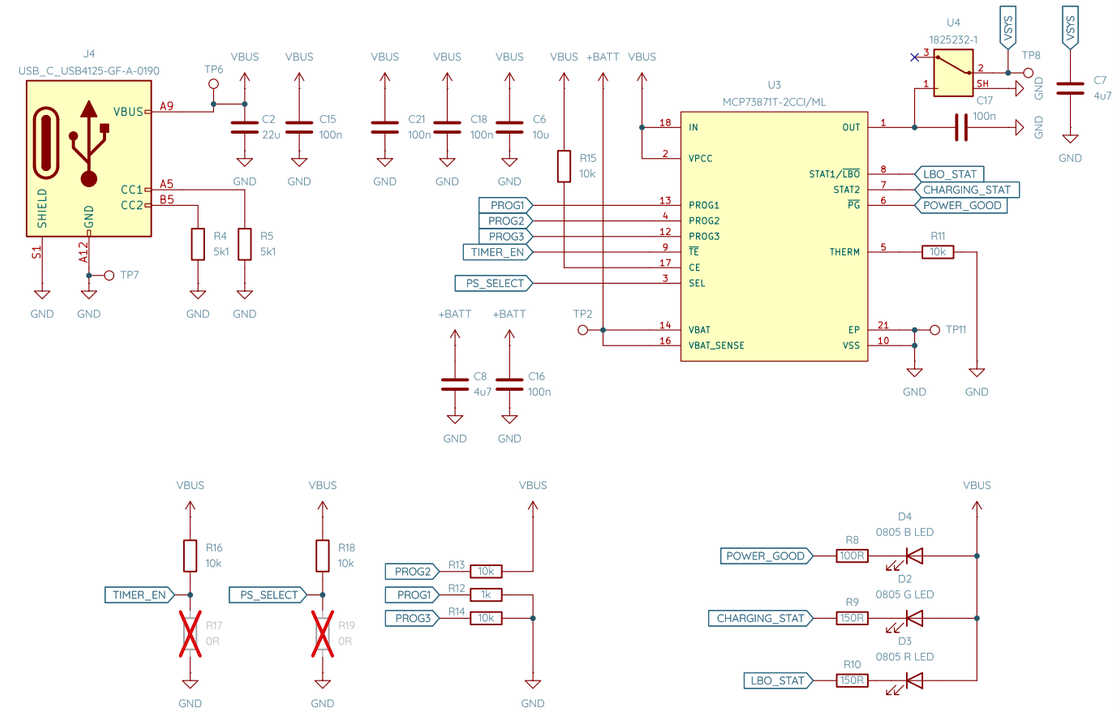

Accelerometer

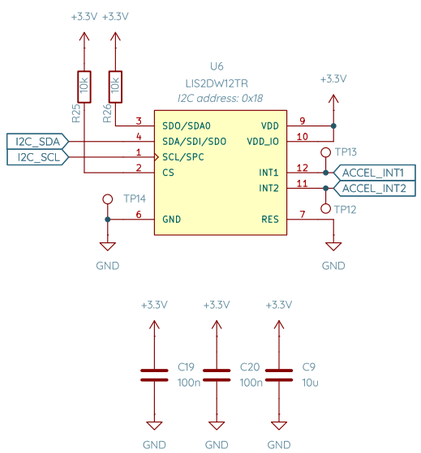

Buttons

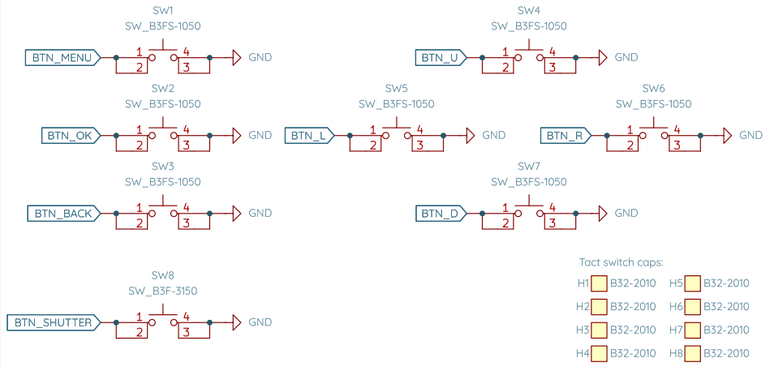

Tact switch caps:
H1 B32-2010
H2 B32-2010
H3 B32-2010
H4 B32-2010
H5 B32-2010
H6 B32-2010
H7 B32-2010
H8 B32-2010

Mechanicals

Display SMD spacers:
H27 9774030633R
H28 9774030633R
H26 9774030633R
H29 9774030633R
H33 M1.6x4
H34 M1.6x4
H35 M1.6x4
H36 M1.6x4

RPi standoffs:
H30 970110151
H31 970110151
H32 970110151
H37 M2.5x5
H38 M2.5x5
H39 M2.5x5
H40 M2.5x8
H41 M2.5x8
H42 M2.5x8
H43 M2.5 nut

Threaded casing inserts:
H9 1386735
H10 1386735
H11 1386735
H12 1386735
H44 M2.5x12
H45 M2.5x12
H46 M2.5x12
H47 M2.5x12

Debug

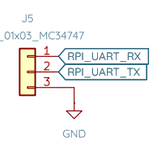

GitHub:
https://github.com/marchmare/snaphat-hw

Sheet: /
File: snaphat.kicad_sch

Title: SnapHAT

Size: A3	Date: 2026-02-22	Rev: 1.0
KiCad E.D.A. 9.0.0		Id: 1/1