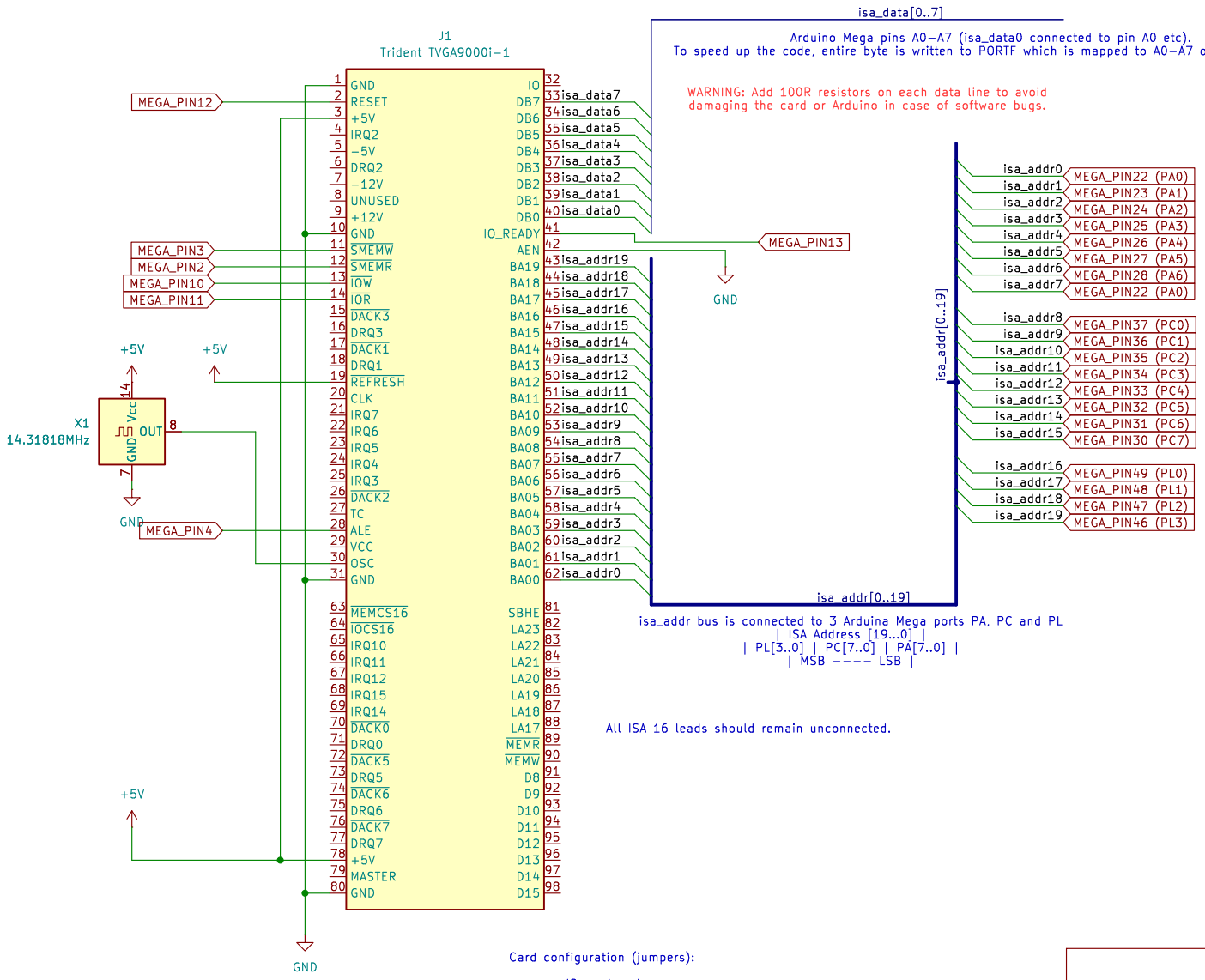

-5V, +12V lines are not used on Trident TVGA9000i.
They should be left unconnected.

Card configuration (jumpers):

J8 - closed
J7 - open
J9 - all 3 closed (SHORT: 8 BIT SLOT)

Sheet: /
File: arduino-isa-connections.kicad_sch

Title:

Size: A4	Date:	Rev:
KiCad E.D.A. 8.0.4		Id: 1/1