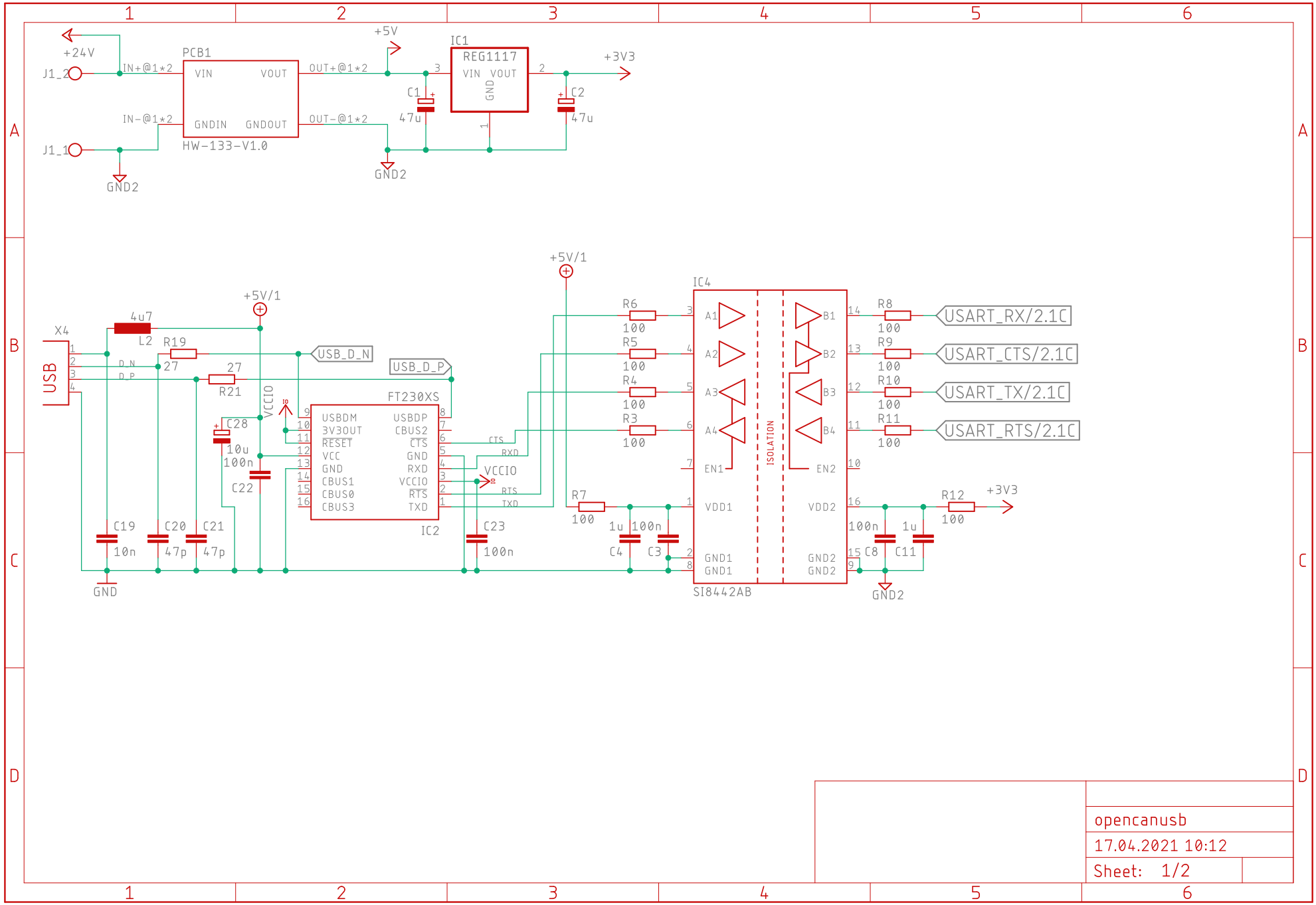

opencanusb

17.04.2021 10:12

Sheet: 1/2

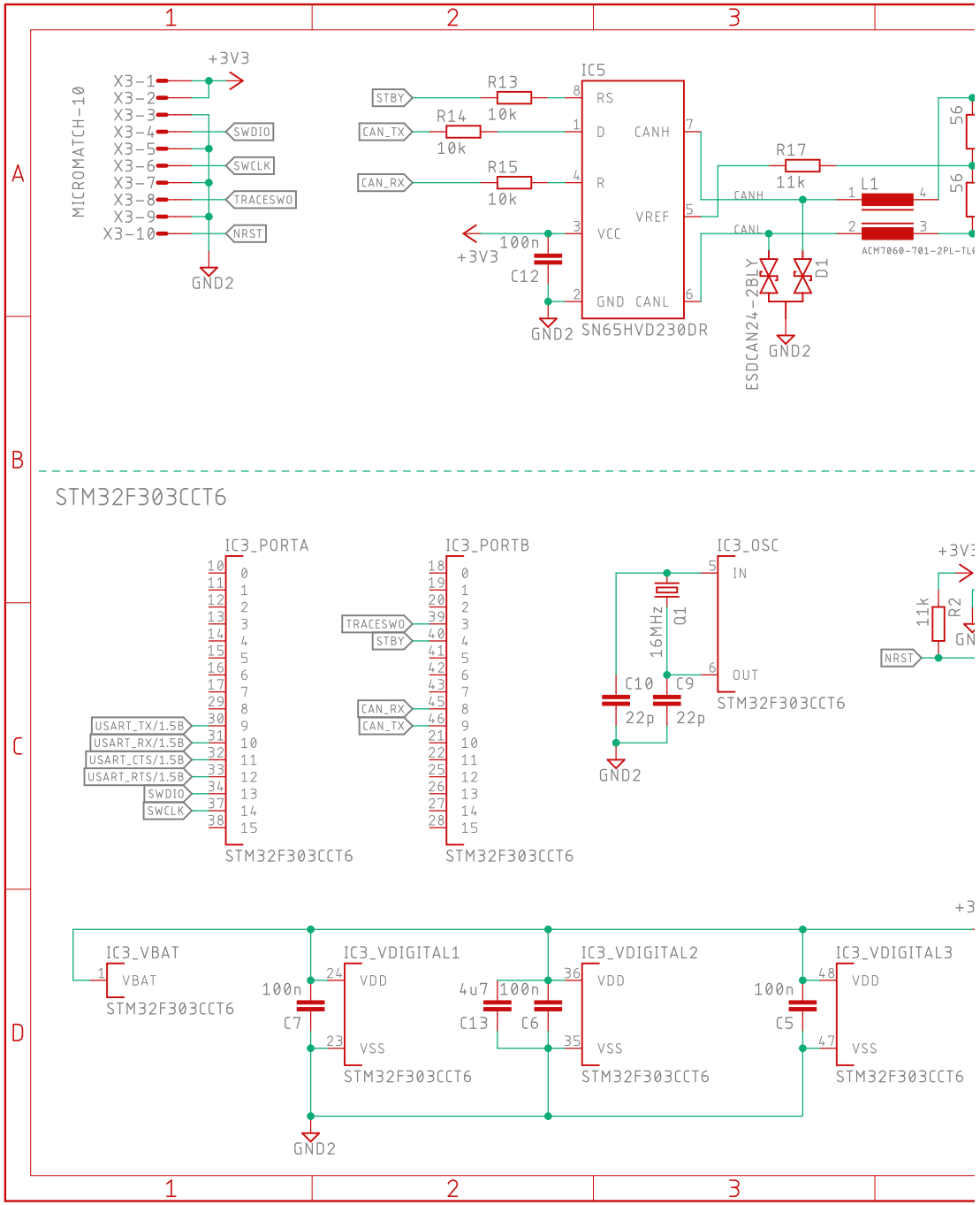
MICROMATCH-10
X3-1
X3-2
X3-3
X3-4
X3-5
X3-6
X3-7
X3-8
X3-9
X3-10
+3V3
SWDIO
SWCLK
TRACESWO
NRST
GND2
STBY
CAN_TX
CAN_RX
R13
10k
R14
10k
R15
10k
IC5
RS
D
R
VCC
GND
CANH
VREF
CANL
SN65HVD230DR
100n
C12
R17
11k
L1
ACM7060-701-2PL-TL
ESDCAN24-2BLY
D1
STM32F303CCT6
IC3_PORTA
IC3_PORTB
IC3_OSC
IN
OUT
16MHz
Q1
C10
C9
22p
USART_TX/1.5B
USART_RX/1.5B
USART_CTS/1.5B
USART_RTS/1.5B
R2
IC3_VBAT
VBAT
IC3_VDIGITAL1
IC3_VDIGITAL2
IC3_VDIGITAL3
VDD
VSS
C7
4u7
C13
C6
C5

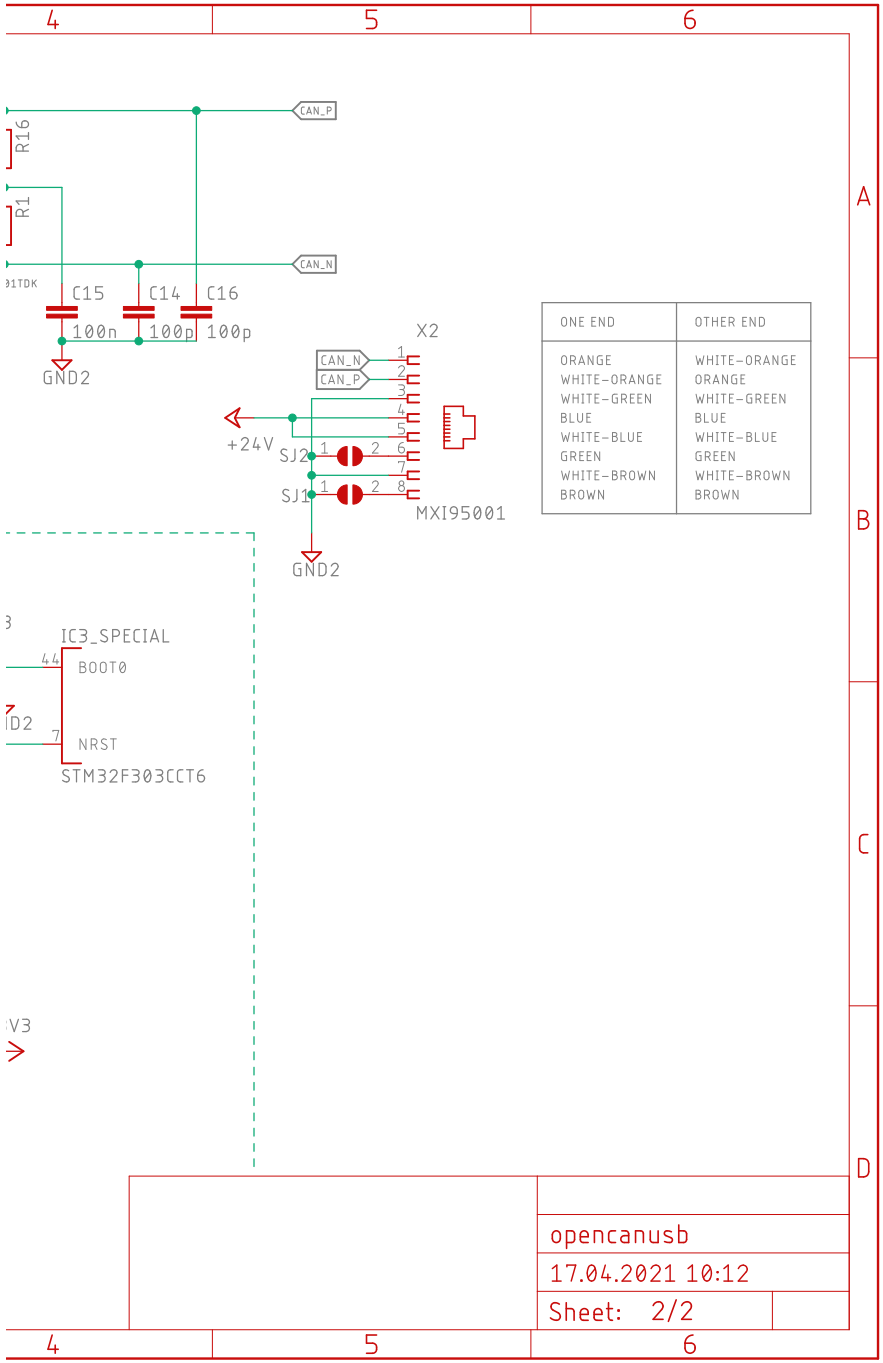

ONE END	OTHER END
ORANGE	WHITE-ORANGE
WHITE-ORANGE	ORANGE
WHITE-GREEN	WHITE-GREEN
BLUE	BLUE
WHITE-BLUE	WHITE-BLUE
GREEN	GREEN
WHITE-BROWN	WHITE-BROWN
BROWN	BROWN

opencanusb

17.04.2021 10:12

Sheet: 2/2