Rev	Zone	Description	By	Date
0		Initial release	Randy	
1		Add connector	Randy	2020-8-21
2			Randy	

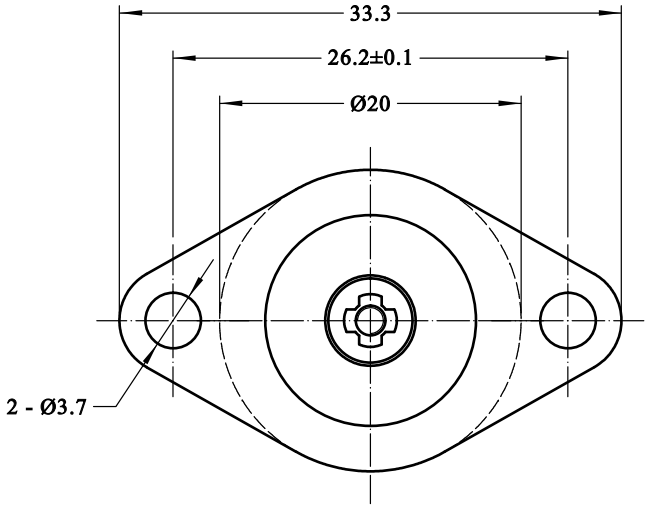

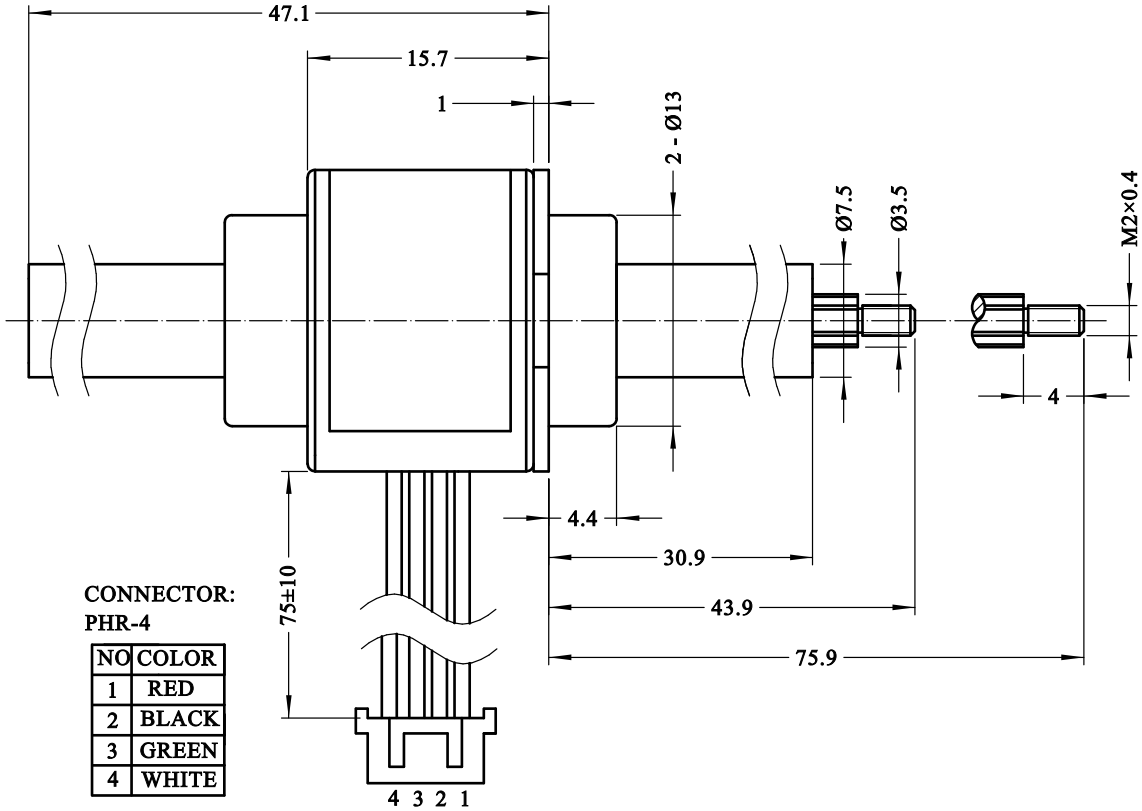

CONNECTOR:
PHR-4

NO	COLOR
1	RED
2	BLACK
3	GREEN
4	WHITE

POWER	W	3.4
VOLTAGE	V	5
PHASE CURRENT	mA	385
PHASE RESISTANCE	Ohm / 20C	13(±10%)
PHASE INDUCTANCE	mH / 1kHz	6.5(±20%)
STEP ANGLE	°	7.5
SCREW LEAD	mm	2.4384
STEP TRAVEL	mm	0.0508
LINEAR FORCE	N / 300PPS	20
STROKE	mm	32
INSULATION RESISTANCE	MΩ (DC 500V)	20
INSULATION CLASS		B
OPERATING TEMP RANGE	℃	-20~+55℃
STORANG TEMP RANGE	℃	-40~+100℃
MASS	g	35

WIRING CHART

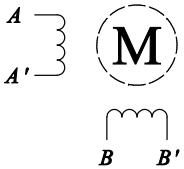

EXCITING SEQUENCE

UL1061

28AWG

EXTENT	→				
RED	*A*	+	-	-	+
BLACK	*A'*	-	+	+	-
GREEN	*B*	-	-	+	+
WHITE	*B'*	+	+	-	-
RETRACT	←				

Changzhou Vic-Tech Motor Technology Co.,Ltd

LINEAR		*ANGLUR*	
0 ~ 3	±0.2	0 ~ 10	±1.5°
3 ~ 6	±0.5	10 ~ 50	±1°
6 ~ 30	±0.8	50 ~ 120	±30'
30 ~ 120	±1.5	120 ~ 400	±15'

DRAWN		*DATE*	2020-6-14
APPRVD		*DATE*	
MODEL	VSM20L-048S-0508-32-01		

SIZE	A4	*SHEET*	1 OF 1
SCALE	2:1	*REV*	1