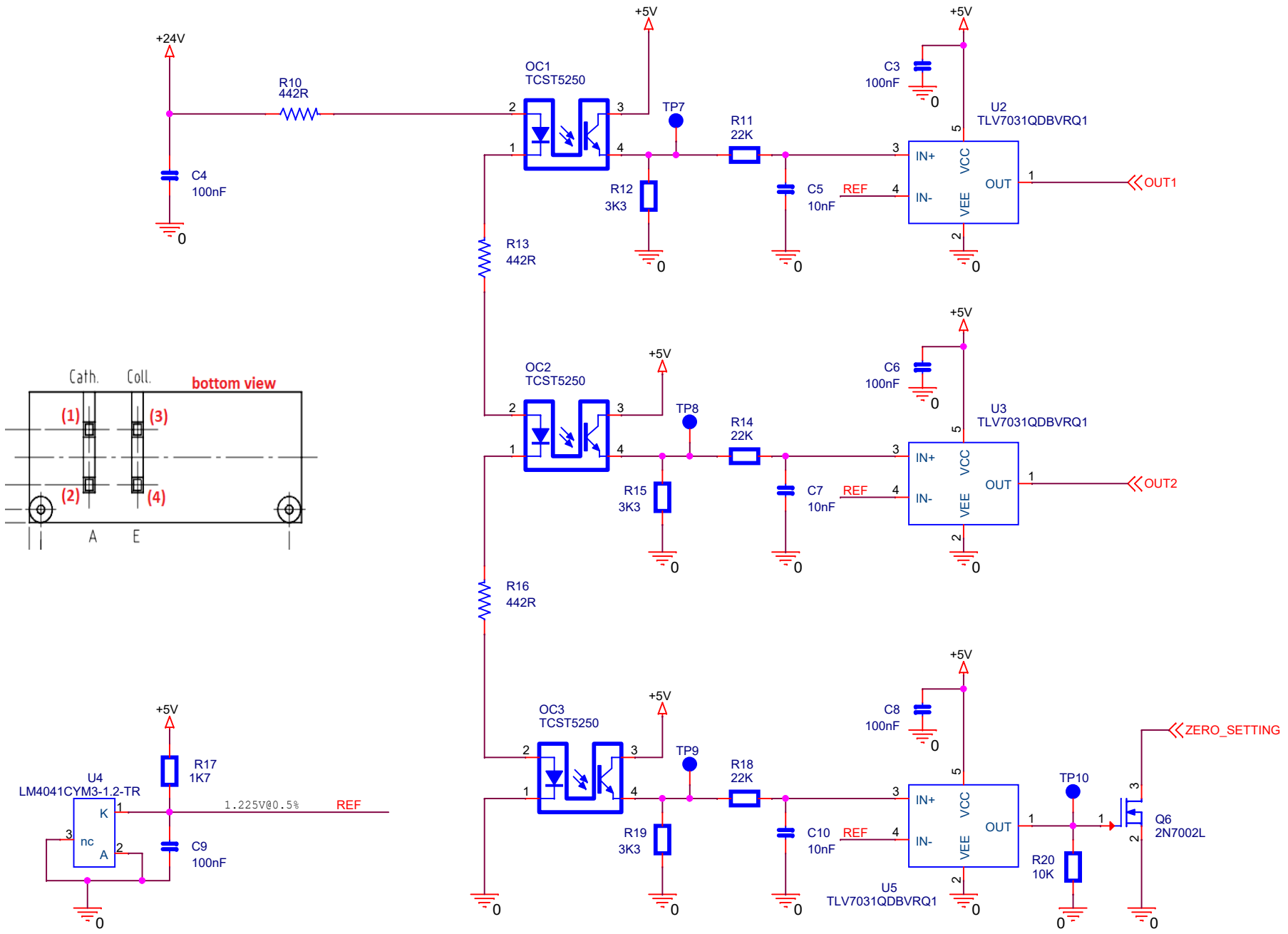

Title	OPTO FRONT-END	
Size A4	Document Number PCB/22-310-0	Rev 0
Date: Tuesday, January 30, 2024	Sheet 2 of 3	