RIVELATORI DI CORRENTE PICCO - PICCO

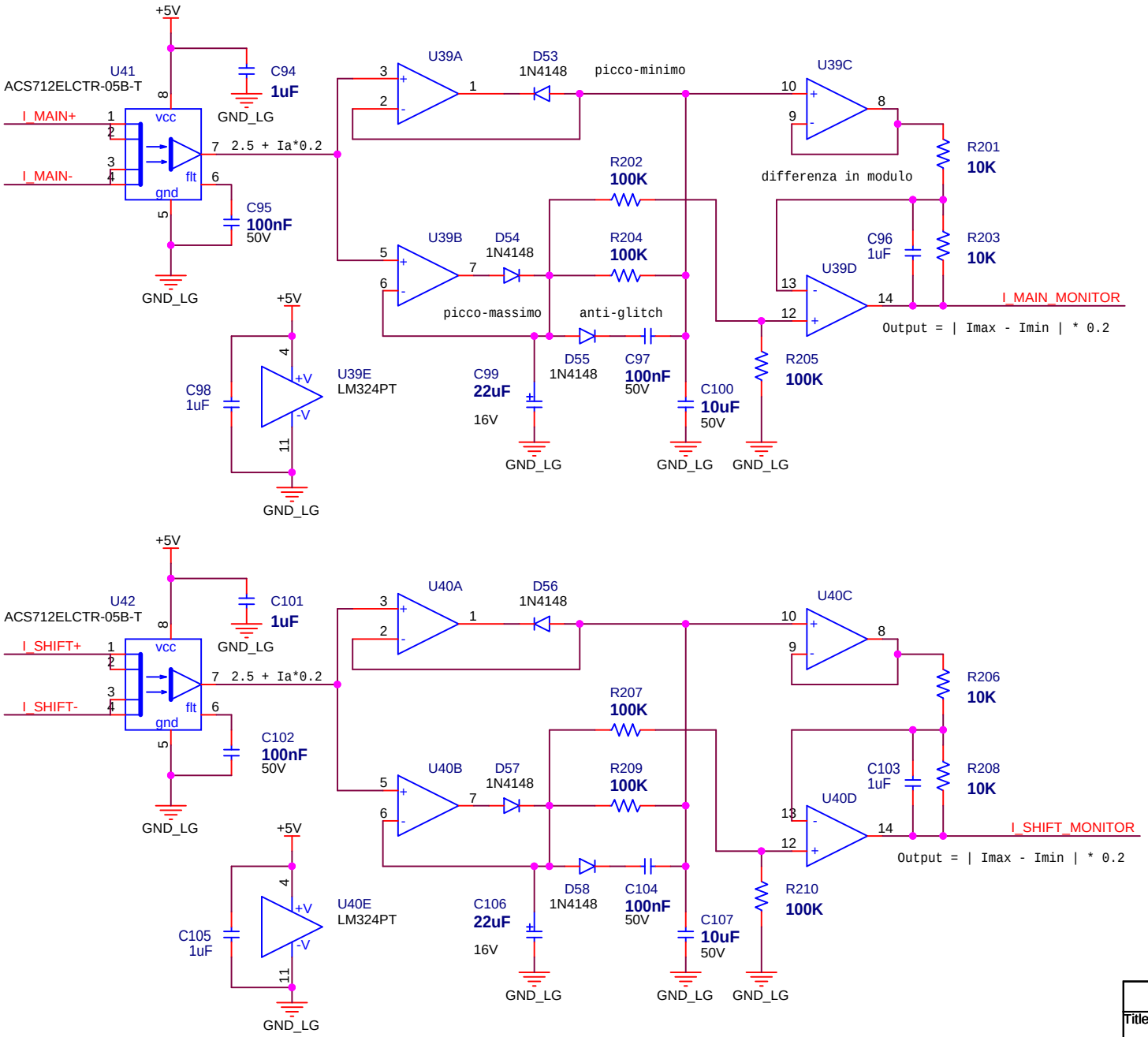

Foglio "ANODO_ROTANTE"

I_MAIN+ — I_MAIN+
I_MAIN- — I_MAIN-
I_SHIFT+ — I_SHIFT+
I_SHIFT- — I_SHIFT-

Foglio "MICRO"

I_MAIN_MONITOR — I_MAIN_MONITOR
I_SHIFT_MONITOR — I_SHIFT_MONITOR

Title	ANODO_CURR_SENS	
Size A4	Document Number PCB-05-190	Rev 02
Date: Sunday, May 31, 2015	Sheet 1 of 20	

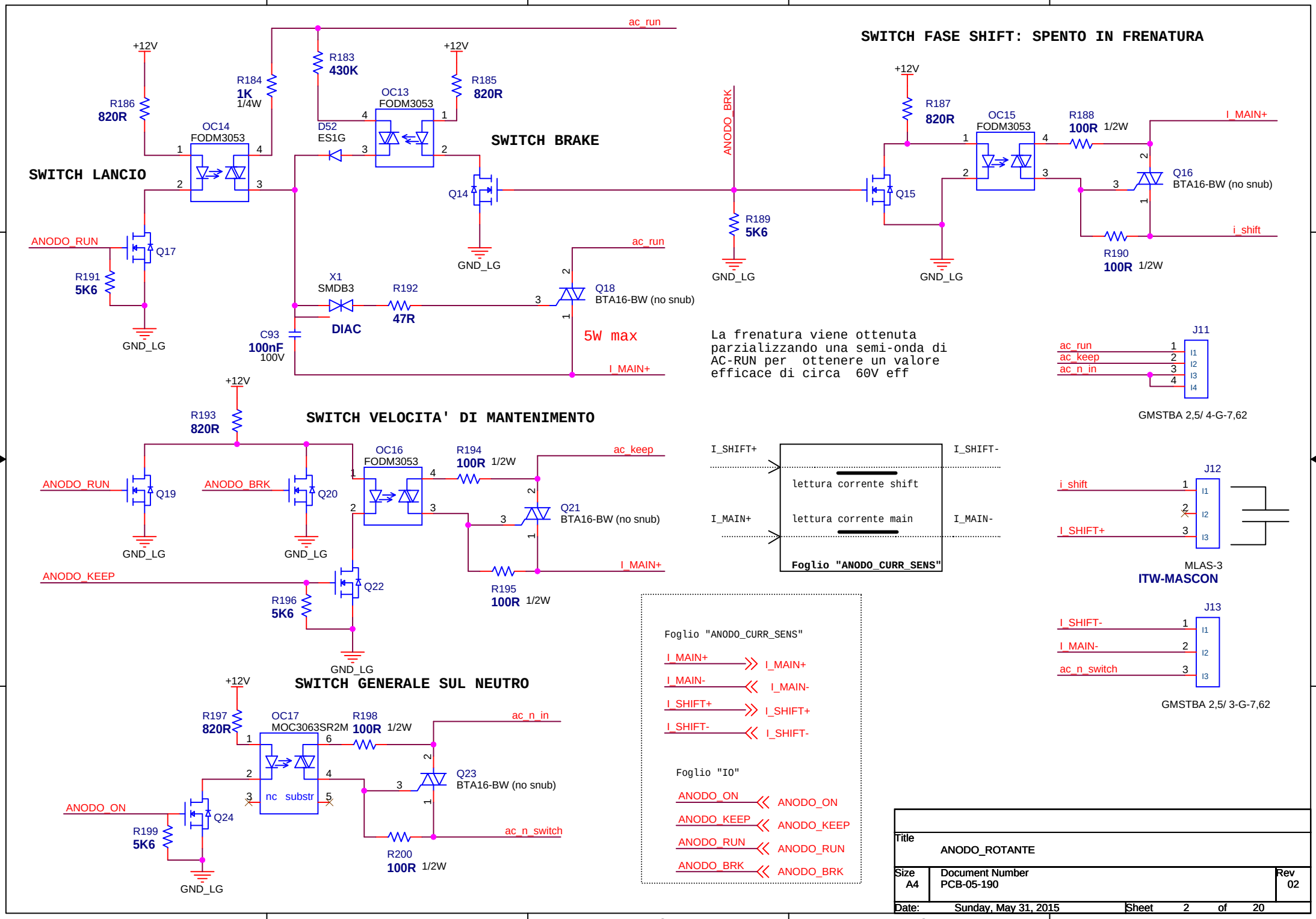
SWITCH LANCIO
SWITCH BRAKE
SWITCH FASE SHIFT: SPENTO IN FRENATURA
SWITCH VELOCITA' DI MANTENIMENTO
SWITCH GENERALE SUL NEUTRO
ac_run
+12V
R183 430K
R184 1K 1/4W
R185 820R
R186 820R
R187 820R
R188 100R 1/2W
R189 5K6
R190 100R 1/2W
R191 5K6
R192 47R
R193 820R
R194 100R 1/2W
R195 100R 1/2W
R196 5K6
R197 820R
R198 100R 1/2W
R199 5K6
R200 100R 1/2W
OC13 FODM3053
OC14 FODM3053
OC15 FODM3053
OC16 FODM3053
OC17 MOC3063SR2M
nc substr
D52 ES1G
X1 SMDB3
DIAC
C93 100nF 100V
Q14
Q15
Q16 BTA16-BW (no snub)
Q17
Q18 BTA16-BW (no snub)
Q19
Q20
Q21 BTA16-BW (no snub)
Q22
Q23 BTA16-BW (no snub)
Q24
ANODO_BRK
ANODO_RUN
ANODO_KEEP
ANODO_ON
GND_LG
I_MAIN+
I_MAIN-
I_SHIFT+
I_SHIFT-
i_shift
ac_keep
ac_n_in
ac_n_switch
5W max
La frenatura viene ottenuta parzializzando una semi-onda di AC-RUN per ottenere un valore efficace di circa 60V eff
J11
GMSTBA 2,5/ 4-G-7,62
J12
MLAS-3
ITW-MASCON
J13
GMSTBA 2,5/ 3-G-7,62
lettura corrente shift
lettura corrente main
Foglio "ANODO_CURR_SENS"
Foglio "IO"
Title
ANODO_ROTANTE
Size A4
Document Number PCB-05-190
Rev 02
Date: Sunday, May 31, 2015
Sheet 2 of 20

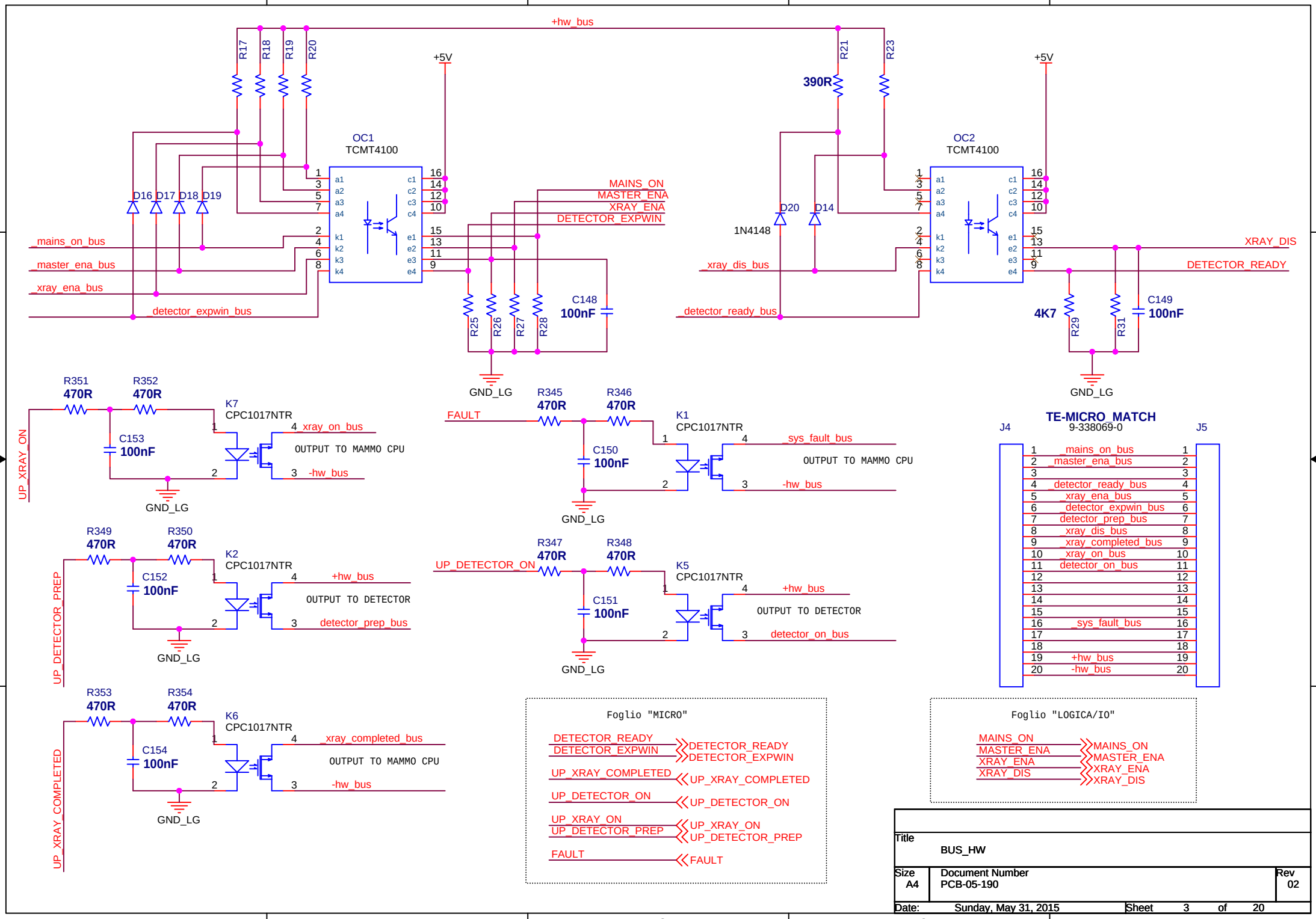

Title	BUS_HW	
Size A4	Document Number PCB-05-190	Rev 02
Date: Sunday, May 31, 2015	Sheet 3 of 20	

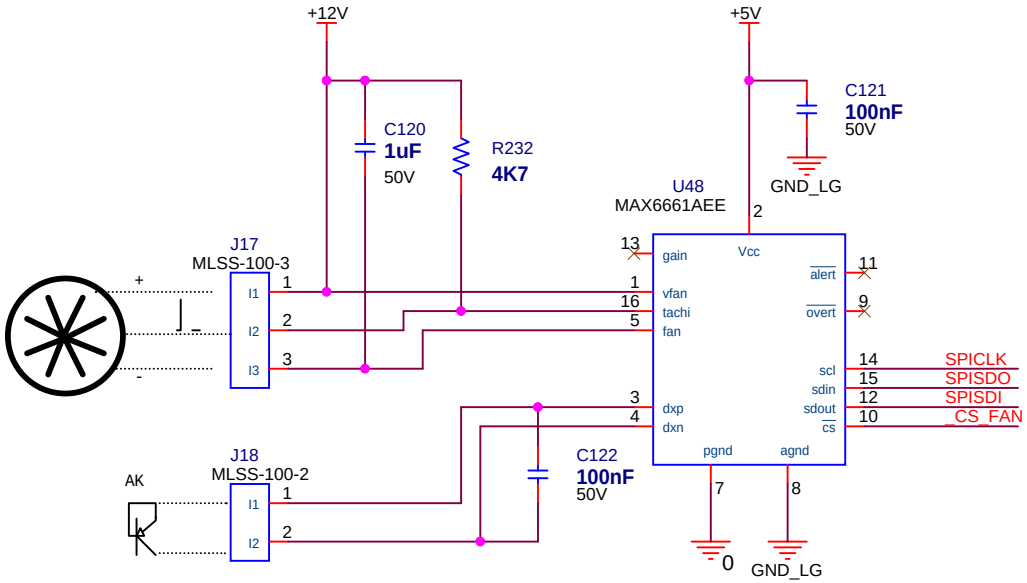

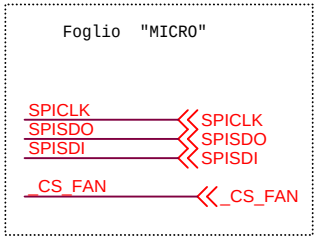

Title	FAN-CONTROLLER	
Size A4	Document Number PCB-05-190	Rev 02
Date: Sunday, May 31, 2015	Sheet 4 of 20	

Tuning: trimmer TRM8 per la simmetria del segnale
Applicare 5V a TP27-TP28;
Regolare R139

TP29 GIALLO
+12V
-12V
C70 1uF 50V
GND_FIL
U37 XR2206CP
P8 20K
R144 220R
ffdb
fo
R148 5K6
R149 5K6
R155 5K6
C78 10uF 50V
C75 10nF
R152 5K6
C74 1uF 50V
C79 1uF 50V
R343 10K
R344 47K
JP13
Taratura corrente: 0,837V
U34A LM358ADGKRG4
R141 18K
R142 10K
R145 5K6
C72 47nF
C73 100nF
R147 10K
R150 4K7
P9 5K
J24
Piazzolato 1x5 p2.54
Consente di azzerare l'uscita di U34A quando V+ = 0V
TP36 VERDE
R146 10K
C69 1uF 50V
R140 39K
C71 100nF 50V
R143 27K
U36 DAC8512FSZ
CS_FILREF
SPICLK
SPISDO
_LD_FILREF
_CLR_FILREF
AN_I_FIL
D44 BAT754S
D45 BAT754S
C76 10uF 50V
R153 200R
R154 200R
FIL_OUT
TF1 TF108
Feedback di corrente
TF108-MEDEL
C77 1uF 50V
U34C
U34B LM358ADGKRG4
C80 100uF 200V
C81 100uF 200V
D46 SK56C
D47 SK56C
TF208-MEDEL
AN_V_FIL
TF2 TF208
FIL_NEG
C82 1uF 50V
U35C
LM1458M U35B
C83 1uF 50V
Chiudere JP14 per attivare filamento per taratura
JP14
R156 820R
K4 CPC1918
R240 10K
FIL_ON
R159 4K7
R160 56K
Q10
Dissipare insieme a PCB-11-219
Attivazione filamento
C85 10uF 50V
C131 100nF 100V
C84 100nF
R157 2K
PCB1 PCB-11-219
TEMP_FIL
C86 100nF 50V
U35A LM1458M
R158 1K
R161 10K
R162 12K
C88 100pF
C89 470pF
C87 1uF 50V
R163 56K
R164 2K
C90 10uF 50V
C132 100nF 100V
-32V

Foglio "PWR_MONITOR"
TEMP_FIL
Foglio "MICRO"
FIL_ON
_CS_FILREF
SPICLK
SPISDO
_LD_FILREF
_CLR_FILREF
AN_I_FIL
AN_V_FIL
Foglio "FUOCHI"
FIL_NEG
FIL_OUT

Title	FILAMENTO	
Size A4	Document Number PCB-05-190	Rev 02
Date: Monday, November 02, 2015	Sheet 5 of 20	

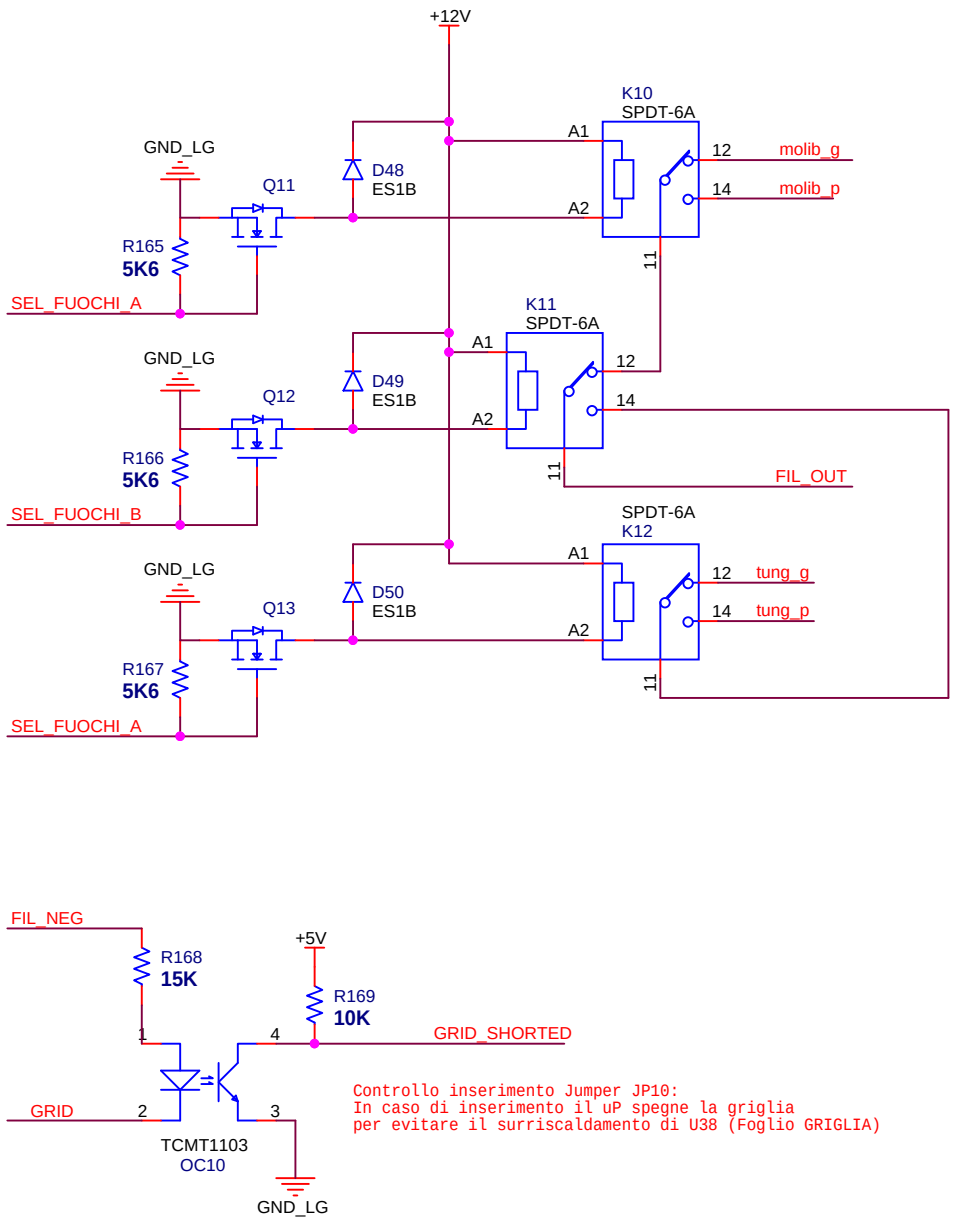

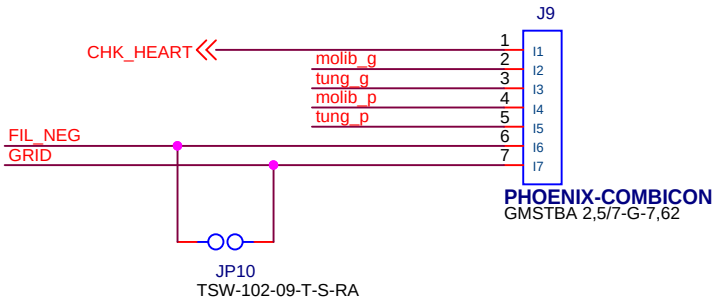

Foglio "FILAMENTO"

FIL_NEG
FIL_OUT
FIL_NEG
FIL_OUT

Foglio "GRIGLIA"

GRID
GRID

Foglio "IO"

SEL_FUOCHI_A
SEL_FUOCHI_B
GRID_SHORTED
SEL_FUOCHI_A
SEL_FUOCHI_B
GRID_SHORTED

Title	FUOCHI	
Size A4	Document Number PCB-05-190	Rev 02
Date: Sunday, May 31, 2015	Sheet 6 of 20	

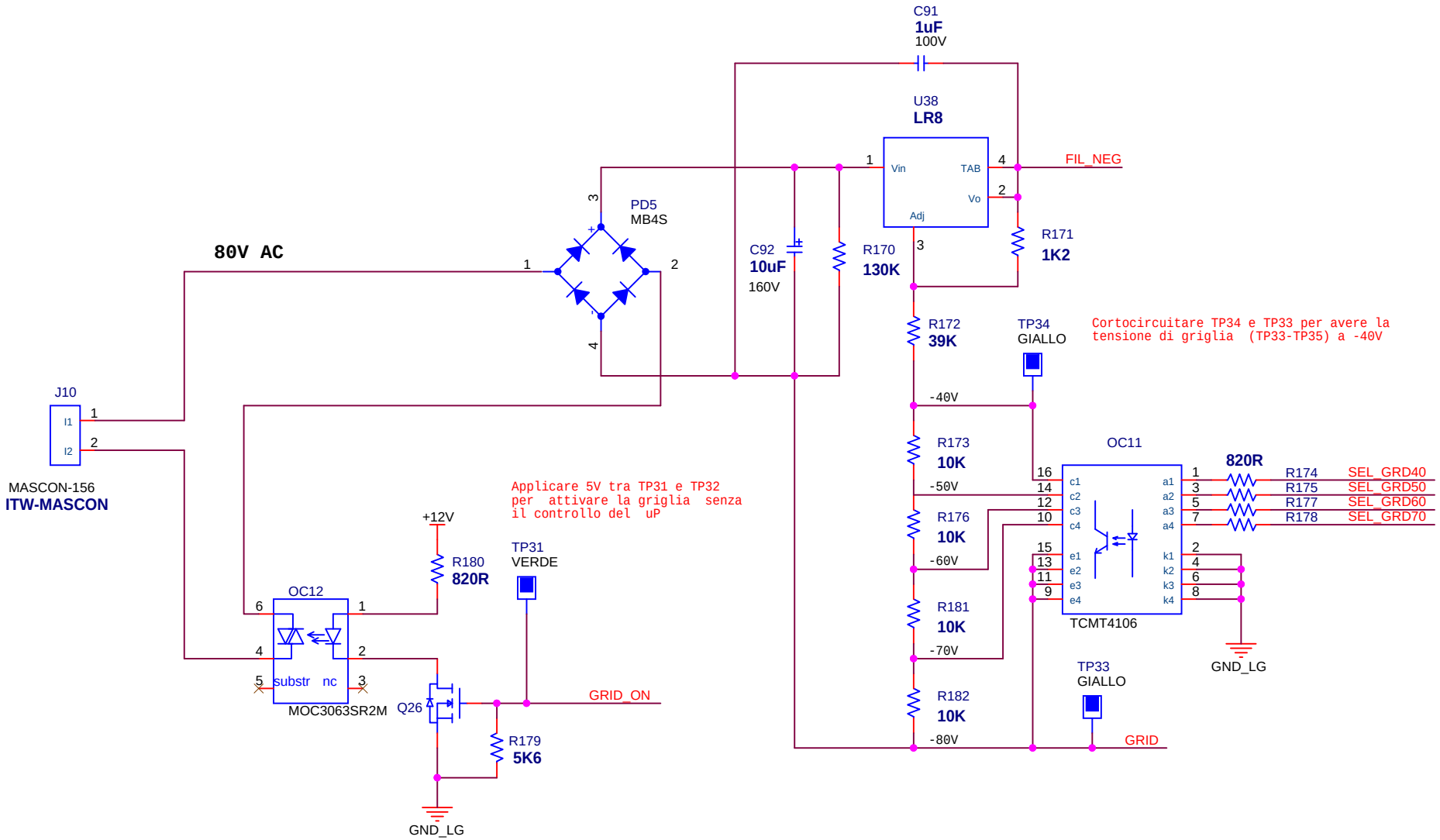

Title	GRIGLIA	
Size A4	Document Number PCB-05-190	Rev 02
Date: Sunday, May 31, 2015	Sheet 7 of 20	

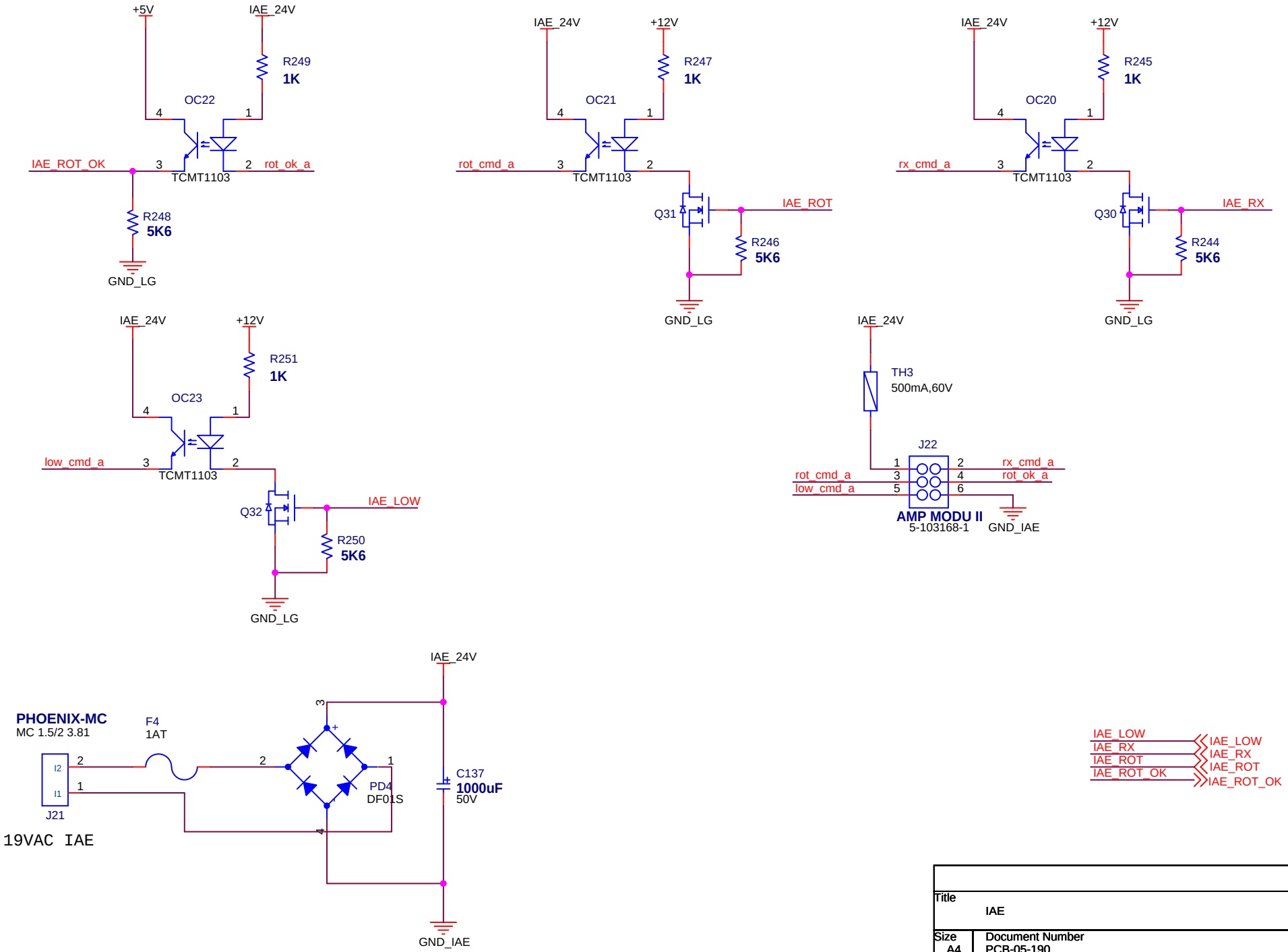

Title	IAE	
Size A4	Document Number PCB-05-190	Rev 02
Date: Sunday, May 31, 2015	Sheet 8 of 20	

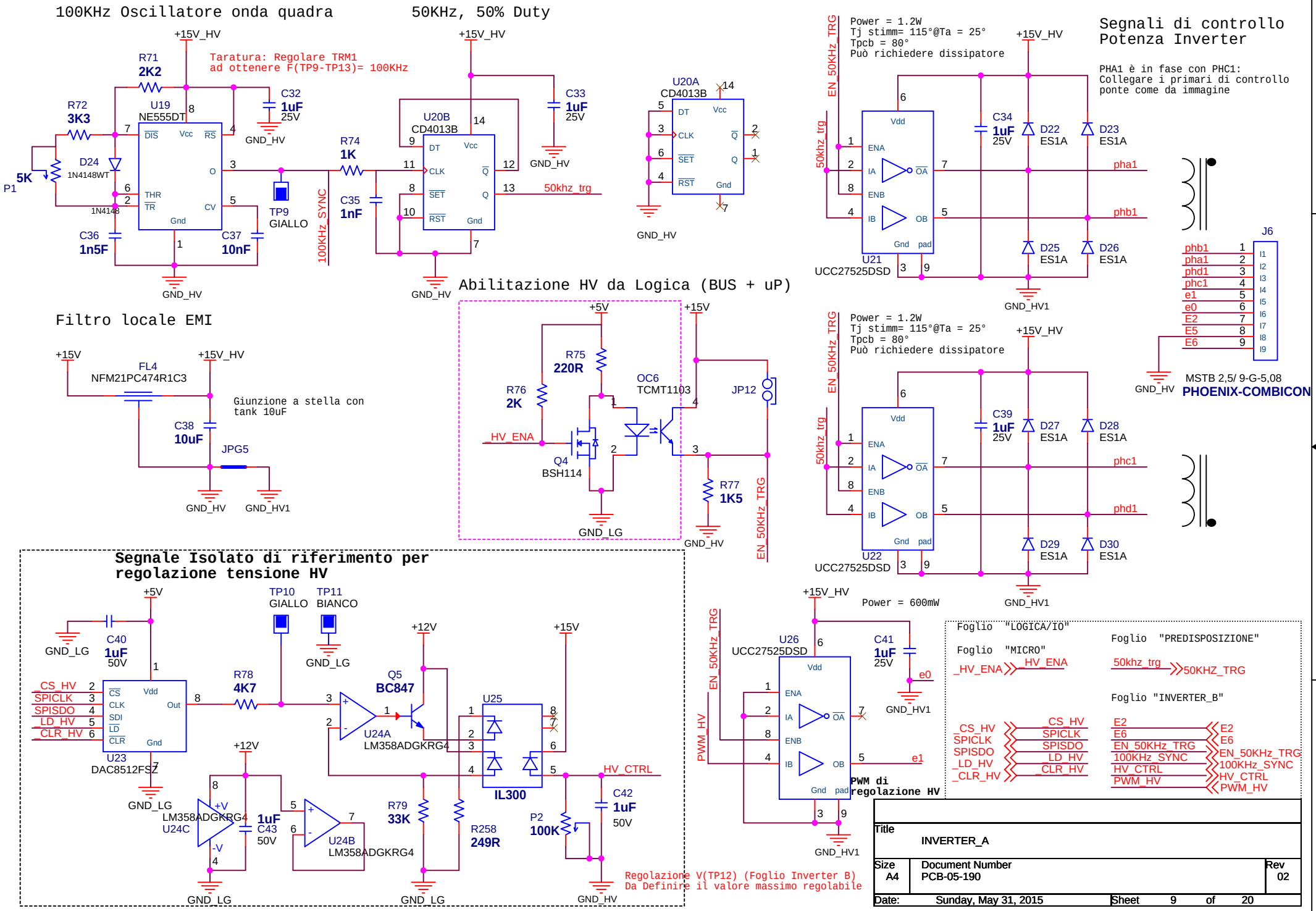
100KHz Oscillatore onda quadra
50KHz, 50% Duty
Taratura: Regolare TRM1
ad ottenere F(TP9-TP13)= 100KHz
+15V_HV
R71
2K2
R72
3K3
U19
NE555DT
C32
1uF
25V
GND_HV
D24
1N4148WT
5K
P1
1N4148
C36
1n5F
C37
10nF
TP9
GIALLO
100KHz_SYNC
R74
1K
C35
1nF
U20B
CD4013B
C33
1uF
25V
50khz_trg
U20A
CD4013B
Segnali di controllo
Potenza Inverter
PHA1 è in fase con PHC1:
Collegare i primari di controllo
ponte come da immagine
Power = 1.2W
Tj stimm= 115°@Ta = 25°
Tpcb = 80°
Può richiedere dissipatore
EN_50KHz_TRG
50khz_trg
U21
UCC27525DSD
C34
1uF
25V
D22
ES1A
D23
ES1A
D25
ES1A
D26
ES1A
pha1
phb1
GND_HV1
J6
phb1
pha1
phd1
phc1
e1
e0
E2
E5
E6
MSTB 2,5/ 9-G-5,08
PHOENIX-COMBICON
Filtro locale EMI
+15V
FL4
NFM21PC474R1C3
Giunzione a stella con
tank 10uF
C38
10uF
JPG5
GND_HV1
Abilitazione HV da Logica (BUS + uP)
+5V
R75
220R
R76
2K
HV_ENA
Q4
BSH114
OC6
TCMT1103
JP12
R77
1K5
GND_LG
U22
UCC27525DSD
C39
1uF
25V
D27
ES1A
D28
ES1A
D29
ES1A
D30
ES1A
phc1
phd1
Segnale Isolato di riferimento per
regolazione tensione HV
C40
1uF
50V
TP10
GIALLO
TP11
BIANCO
+12V
R78
4K7
Q5
BC847
U24A
LM358ADGKRG4
U25
IL300
U23
DAC8512FSZ
_CS_HV
SPICLK
SPISDO
_LD_HV
_CLR_HV
LM358ADGKRG4
U24C
C43
1uF
50V
U24B
LM358ADGKRG4
R79
33K
R258
249R
P2
100K
C42
1uF
50V
HV_CTRL
Regolazione V(TP12) (Foglio Inverter B)
Da Definire il valore massimo regolabile
Power = 600mW
U26
UCC27525DSD
C41
1uF
25V
PWM_HV
PWM di
regolazione HV
Foglio "LOGICA/IO"
Foglio "MICRO"
_HV_ENA
Foglio "PREDISPOSIZIONE"
50khz_trg
50KHZ_TRG
Foglio "INVERTER_B"
_CS_HV
SPICLK
SPISDO
_LD_HV
_CLR_HV
E2
E6
EN_50KHz_TRG
100KHz_SYNC
HV_CTRL
PWM_HV
Title
INVERTER_A
Size
A4
Document Number
PCB-05-190
Rev
02
Date: Sunday, May 31, 2015
Sheet 9 of 20

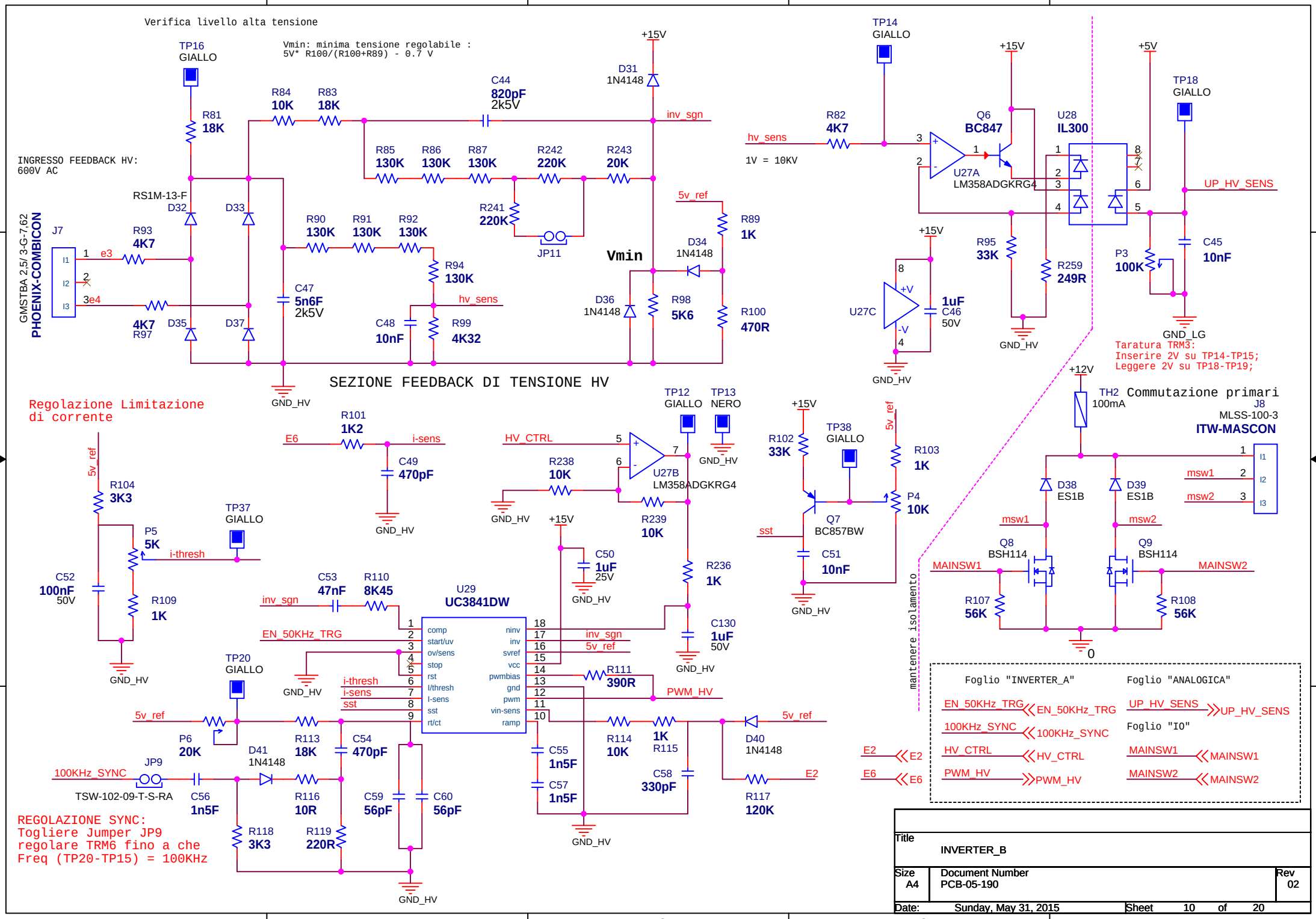
Verifica livello alta tensione
Vmin: minima tensione regolabile :
5V* R100/(R100+R89) - 0.7 V
INGRESSO FEEDBACK HV:
600V AC
GMSTBA 2,5/ 3-G-7,62
PHOENIX-COMBICON
J7
TP16
GIALLO
R81
18K
R84
10K
R83
18K
C44
820pF
2k5V
D31
1N4148
+15V
inv_sgn
R85
130K
R86
130K
R87
130K
R242
220K
R243
20K
R241
220K
JP11
5v_ref
R89
1K
D34
1N4148
Vmin
R90
130K
R91
130K
R92
130K
R94
130K
hv_sens
C47
5n6F
2k5V
C48
10nF
R99
4K32
D36
1N4148
R98
5K6
R100
470R
RS1M-13-F
D32
D33
D35
D37
R93
4K7
e3
e4
4K7
R97
GND_HV
SEZIONE FEEDBACK DI TENSIONE HV
TP14
GIALLO
hv_sens
1V = 10KV
R82
4K7
Q6
BC847
U28
IL300
U27A
LM358ADGKRG4
+5V
TP18
GIALLO
UP_HV_SENS
R95
33K
R259
249R
P3
100K
C45
10nF
U27C
C46
1uF
50V
GND_LG
Taratura TRM3:
Inserire 2V su TP14-TP15;
Leggere 2V su TP18-TP19;
Regolazione Limitazione
di corrente
R101
1K2
E6
i-sens
C49
470pF
TP12
GIALLO
TP13
NERO
HV_CTRL
R238
10K
U27B
LM358ADGKRG4
R239
10K
R236
1K
C130
1uF
50V
R102
33K
TP38
GIALLO
R103
1K
P4
10K
Q7
BC857BW
sst
C51
10nF
+12V
TH2
100mA
Commutazione primari
J8
MLSS-100-3
ITW-MASCON
msw1
msw2
D38
ES1B
D39
ES1B
Q8
BSH114
Q9
BSH114
MAINSW1
MAINSW2
R107
56K
R108
56K
mantenere isolamento
R104
3K3
P5
5K
i-thresh
TP37
GIALLO
C52
100nF
50V
R109
1K
C53
47nF
R110
8K45
U29
UC3841DW
comp
start/uv
ov/sens
stop
rst
I/thresh
I-sens
sst
rt/ct
ninv
inv
svref
vcc
pwmbias
gnd
pwm
vin-sens
ramp
EN_50KHz_TRG
C50
1uF
25V
R111
390R
PWM_HV
TP20
GIALLO
P6
20K
R113
18K
C54
470pF
D41
1N4148
JP9
100KHz_SYNC
TSW-102-09-T-S-RA
C56
1n5F
R116
10R
C59
56pF
C60
56pF
R118
3K3
R119
220R
C55
1n5F
C57
1n5F
R114
10K
R115
1K
C58
330pF
D40
1N4148
R117
120K
E2
E6
REGOLAZIONE SYNC:
Togliere Jumper JP9
regolare TRM6 fino a che
Freq (TP20-TP15) = 100KHz
Foglio "INVERTER_A"
EN_50KHz_TRG
100KHz_SYNC
HV_CTRL
PWM_HV
Foglio "ANALOGICA"
UP_HV_SENS
Foglio "IO"
MAINSW1
MAINSW2
Title
INVERTER_B
Size
A4
Document Number
PCB-05-190
Rev
02
Date:
Sunday, May 31, 2015
Sheet
10
of
20

ATTIVAZIONE ANODO ROTANTE

UP_SEL_ANODO_B	UP_SEL_ANODO_A	Funzione
0	0	ANODO OFF
0	1	RUN
1	0	KEEP
1	1	BREAK

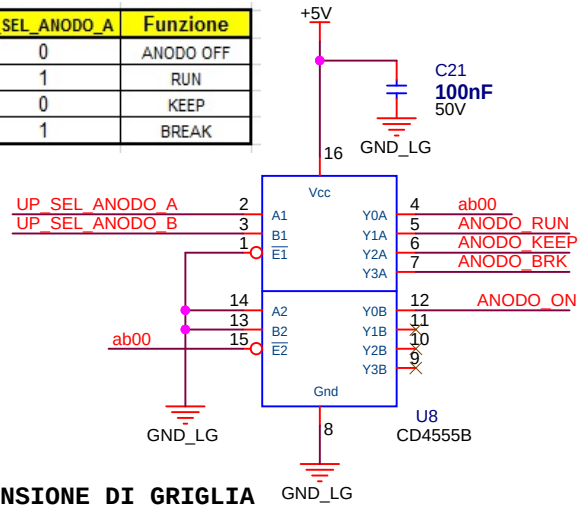

SELEZIONE TENSIONE DI GRIGLIA

UP_SEL_GRID_C	UP_SEL_GRID_B	UP_SEL_GRID_A	V GRIGLIA
0	0	0	-40V
0	0	1	-50V
0	1	0	-60V
0	1	1	-70V
1	X	X	-80V

SELEZIONE FUOCHI

UP_SEL_FUOCHI_B	UP_SEL_FUOCHI_A	Funzione
0	0	MOLIB. GRANDE
0	1	MOLIB. PICCOLO
1	0	TUNGST. GRANDE
1	1	TUNGST. PICCOLO

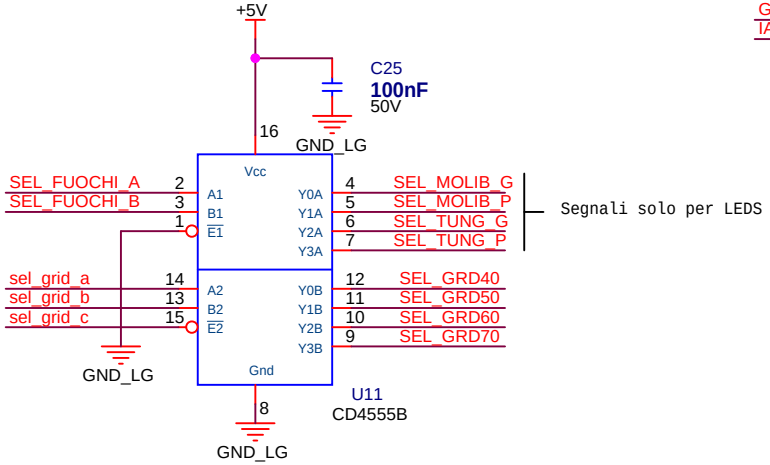

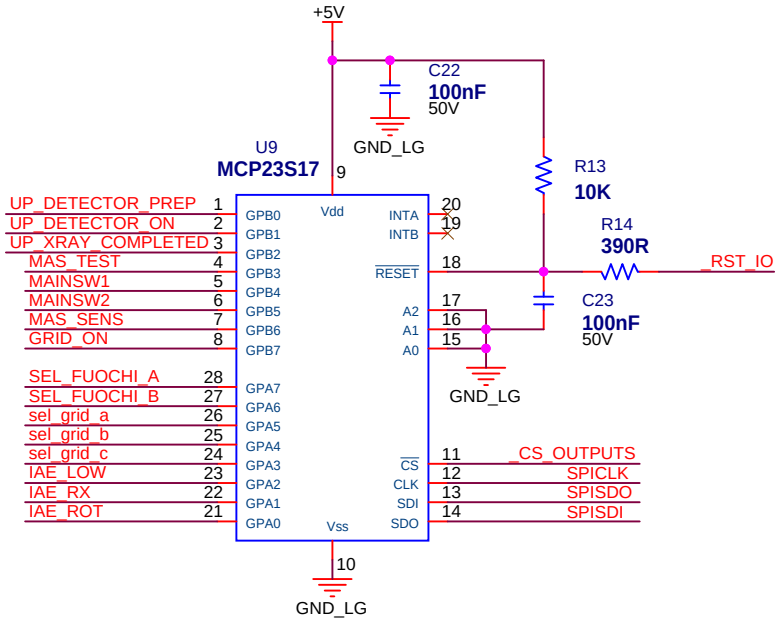

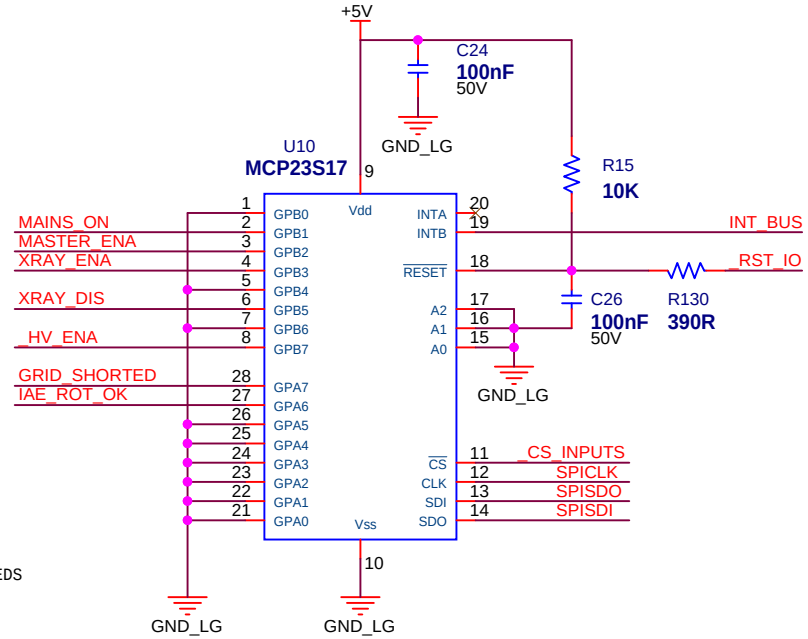

Foglio "MICRO"

UP_SEL_ANODO_A
UP_SEL_ANODO_B
INT_BUS
_RST_IO
_CS_INPUTS
_CS_OUTPUTS
SPICLK
SPISDO
SPISDI

Foglio "FILAMENTO"

GRID_SHORTED

Foglio "GRIGLIA"

SEL_GRD40
SEL_GRD50
SEL_GRD60
SEL_GRD70
GRID_ON

Foglio "BUS_HW"

UP_XRAY_COMPLETED
UP_DETECTOR_ON
UP_DETECTOR_PREP
MAINS_ON
MASTER_ENA
XRAY_ENA
XRAY_DIS

Foglio "LOGICA"

_HV_ENA

Foglio "MASSMETRO"

MAS_TEST

Foglio "INVERTER_B"

MAINSW1
MAINSW2

Foglio "ANODO_ROTANTE"

ANODO_RUN
ANODO_KEEP
ANODO_BRK
ANODO_ON

Foglio "FUOCHI"

SEL_FUOCHI_A
SEL_FUOCHI_B

Foglio "LEDS"

SEL_MOLIB_P
SEL_MOLIB_G
SEL_TUNG_P
SEL_TUNG_G

Foglio "IAE"

IAE_RX
IAE_ROT
IAE_ROT_OK
IAE_LOW
MAS_SENS

Title: IO		
Size: A4	Document Number: PCB-05-190	Rev: 02
Date: Sunday, May 31, 2015	Sheet 11 of 20	

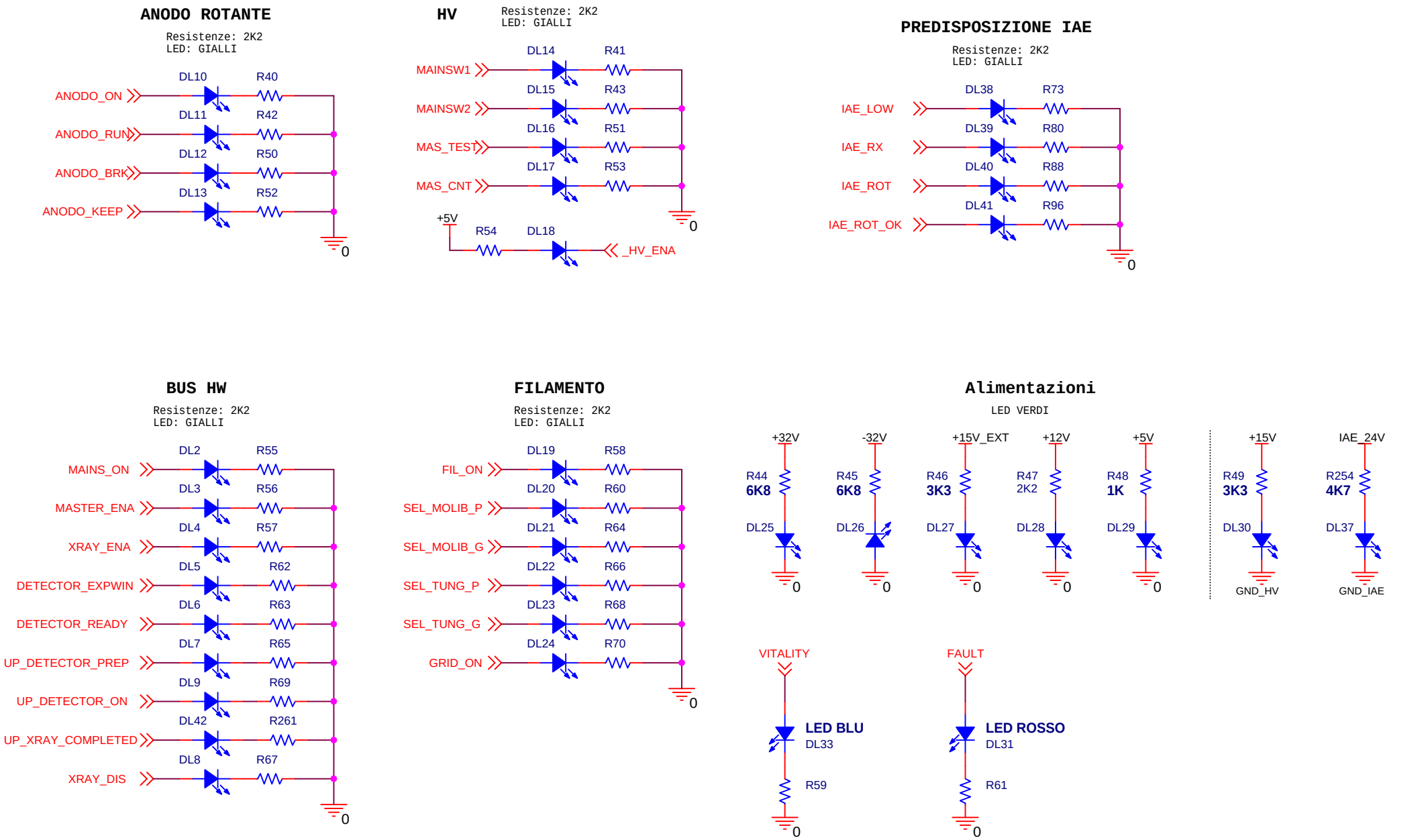
ANODO ROTANTE
Resistenze: 2K2
LED: GIALLI
ANODO_ON
ANODO_RUN
ANODO_BRK
ANODO_KEEP
DL10 R40
DL11 R42
DL12 R50
DL13 R52
HV
Resistenze: 2K2
LED: GIALLI
MAINSW1
MAINSW2
MAS_TEST
MAS_CNT
DL14 R41
DL15 R43
DL16 R51
DL17 R53
+5V
R54 DL18
_HV_ENA
PREDISPOSIZIONE IAE
Resistenze: 2K2
LED: GIALLI
IAE_LOW
IAE_RX
IAE_ROT
IAE_ROT_OK
DL38 R73
DL39 R80
DL40 R88
DL41 R96
BUS HW
Resistenze: 2K2
LED: GIALLI
MAINS_ON
MASTER_ENA
XRAY_ENA
DETECTOR_EXPWIN
DETECTOR_READY
UP_DETECTOR_PREP
UP_DETECTOR_ON
UP_XRAY_COMPLETED
XRAY_DIS
DL2 R55
DL3 R56
DL4 R57
DL5 R62
DL6 R63
DL7 R65
DL9 R69
DL42 R261
DL8 R67
FILAMENTO
Resistenze: 2K2
LED: GIALLI
FIL_ON
SEL_MOLIB_P
SEL_MOLIB_G
SEL_TUNG_P
SEL_TUNG_G
GRID_ON
DL19 R58
DL20 R60
DL21 R64
DL22 R66
DL23 R68
DL24 R70
Alimentazioni
LED VERDI
+32V
-32V
+15V_EXT
+12V
+5V
+15V
IAE_24V
R44 6K8
R45 6K8
R46 3K3
R47 2K2
R48 1K
R49 3K3
R254 4K7
DL25
DL26
DL27
DL28
DL29
DL30
DL37
GND_HV
GND_IAE
VITALITY
FAULT
LED BLU
DL33
R59
LED ROSSO
DL31
R61
Title
LEDS
Size
A4
Document Number
PCB-05-190
Rev
02
Date:
Sunday, May 31, 2015
Sheet 12 of 20

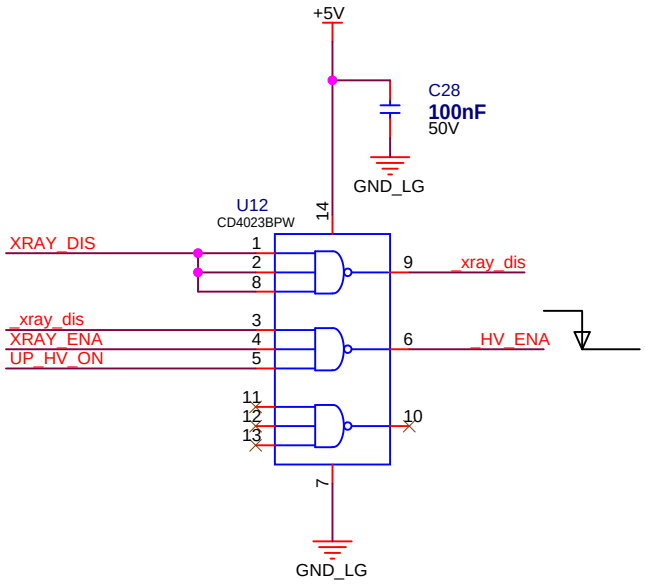

Foglio "INVERTER_A/IO"

_HV_ENA ——— _HV_ENA

Foglio "BUS_HW"

XRAY_ENA ——— XRAY_ENA

XRAY_DIS ——— XRAY_DIS

Foglio "MICRO"

UP_HV_ON ——— UP_HV_ON

Title	LOGICA	
Size A4	Document Number PCB-05-190	Rev 02
Date: Sunday, May 31, 2015	Sheet 13 of 20	

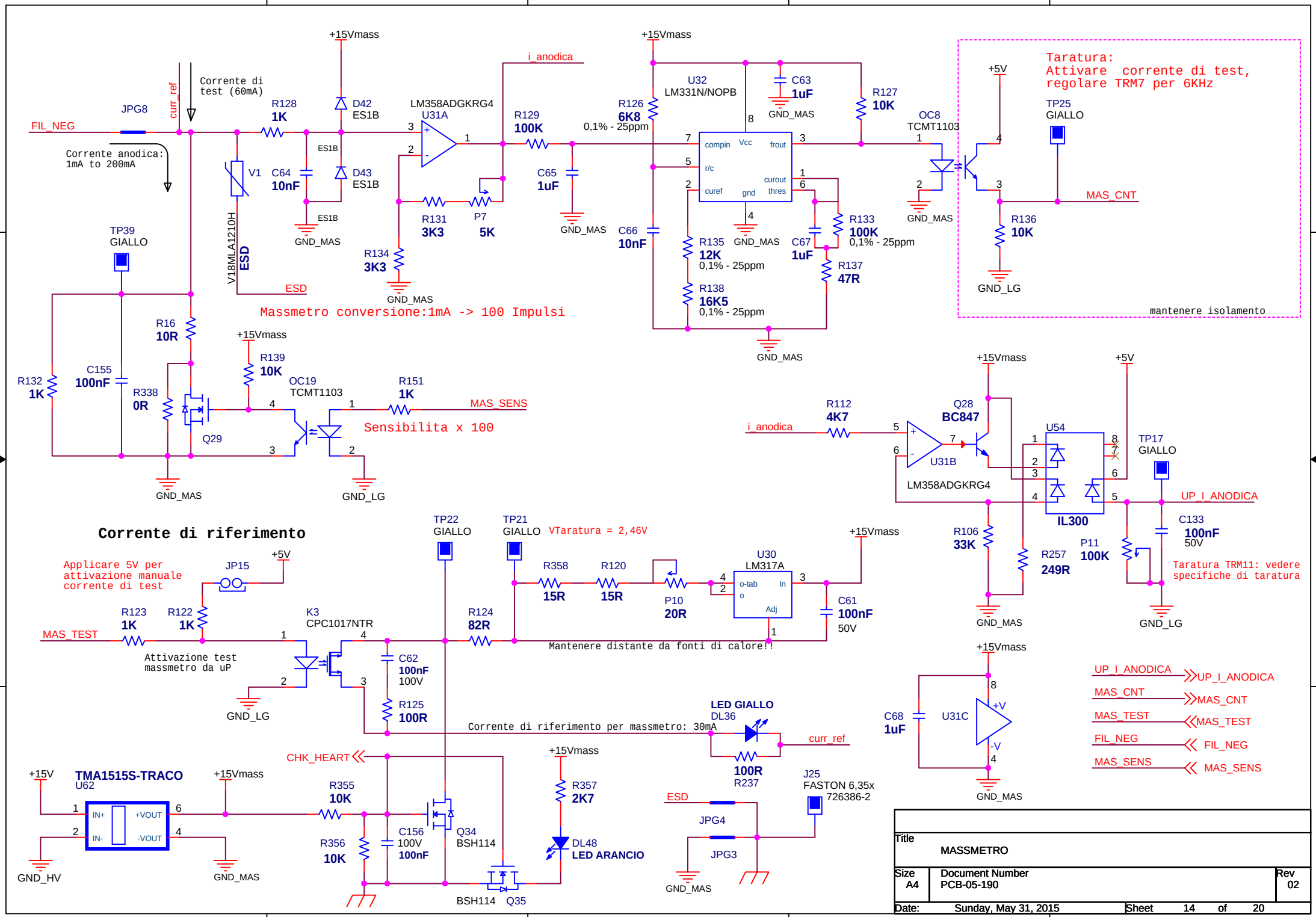
+15Vmass
i_anodica
Corrente di test (60mA)
curr_ref
JPG8
FIL_NEG
Corrente anodica: 1mA to 200mA
R128 1K
D42 ES1B
D43 ES1B
ES1B
V1
C64 10nF
V18MLA1210H
ESD
GND_MAS
LM358ADGKRG4 U31A
R131 3K3
P7 5K
R134 3K3
R129 100K
C65 1uF
U32 LM331N/NOPB
R126 6K8 0,1% - 25ppm
C63 1uF
R127 10K
compin Vcc frout r/c curout curef gnd thres
C66 10nF
R135 12K 0,1% - 25ppm
R138 16K5 0,1% - 25ppm
C67 1uF
R133 100K 0,1% - 25ppm
R137 47R
OC8 TCMT1103
+5V
TP25 GIALLO
MAS_CNT
R136 10K
GND_LG
Taratura: Attivare corrente di test, regolare TRM7 per 6KHz
mantenere isolamento
Massmetro conversione:1mA -> 100 Impulsi
TP39 GIALLO
R16 10R
R132 1K
C155 100nF
R338 0R
Q29
R139 10K
OC19 TCMT1103
R151 1K
MAS_SENS
Sensibilita x 100
GND_LG
R112 4K7
Q28 BC847
U31B
LM358ADGKRG4
U54
IL300
TP17 GIALLO
UP_I_ANODICA
C133 100nF 50V
R106 33K
R257 249R
P11 100K
Taratura TRM11: vedere specifiche di taratura
Corrente di riferimento
Applicare 5V per attivazione manuale corrente di test
JP15
R123 1K
R122 1K
MAS_TEST
Attivazione test massmetro da uP
K3 CPC1017NTR
TP22 GIALLO
TP21 GIALLO
VTaratura = 2,46V
R358 15R
R120 15R
P10 20R
U30 LM317A
o-tab In o Adj
C61 100nF 50V
R124 82R
Mantenere distante da fonti di calore!!
C62 100nF 100V
R125 100R
Corrente di riferimento per massmetro: 30mA
LED GIALLO DL36
curr_ref
100R R237
C68 1uF
U31C
+V -V
UP_I_ANODICA
MAS_CNT
MAS_TEST
FIL_NEG
MAS_SENS
CHK_HEART
TMA1515S-TRACO U62
+15V
IN+ IN- +VOUT -VOUT
GND_HV
R355 10K
R356 10K
C156 100V 100nF
Q34 BSH114
BSH114 Q35
R357 2K7
DL48 LED ARANCIO
ESD
JPG4
JPG3
J25 FASTON 6,35x 726386-2
Title
MASSMETRO
Size A4
Document Number PCB-05-190
Rev 02
Date: Sunday, May 31, 2015
Sheet 14 of 20

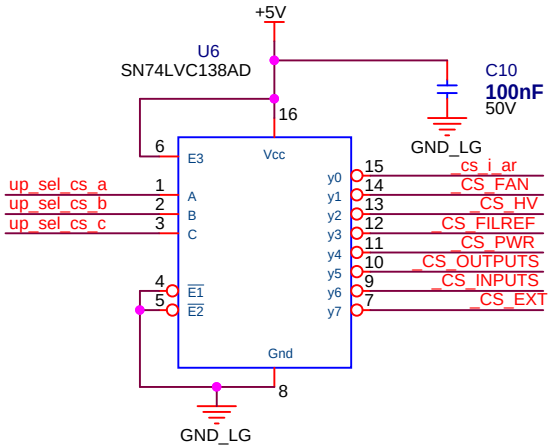

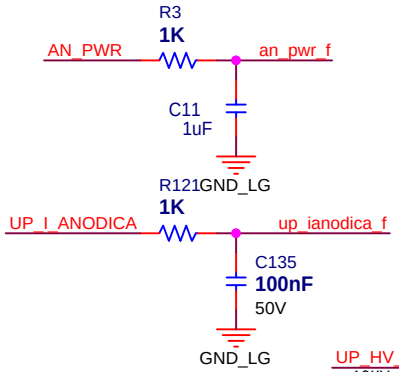

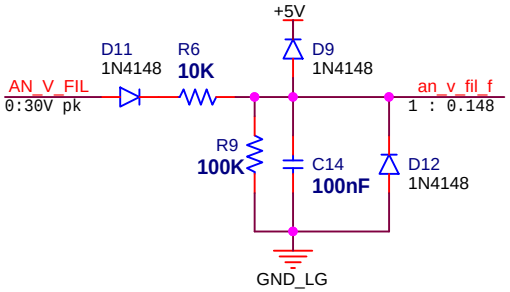

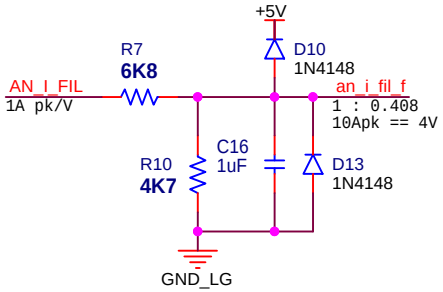

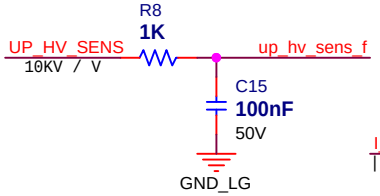

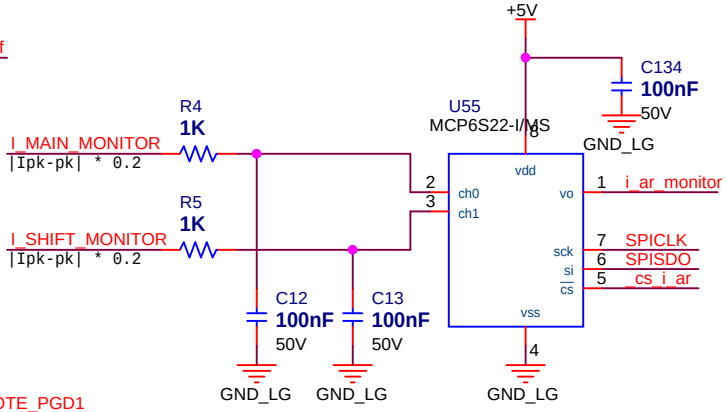

SPI CHIP SELECT DEMULTIPLEXER

UP_SEL_CS_C	UP_SEL_CS_B	UP_SEL_CS_A	CS
0	0	0	I_AR
0	0	1	FAN_COIL
0	1	0	HV REF
0	1	1	FILREF
1	0	0	PWR MONITOR
1	0	1	OUTPUTS
1	1	0	INPUTS
1	1	1	EXT

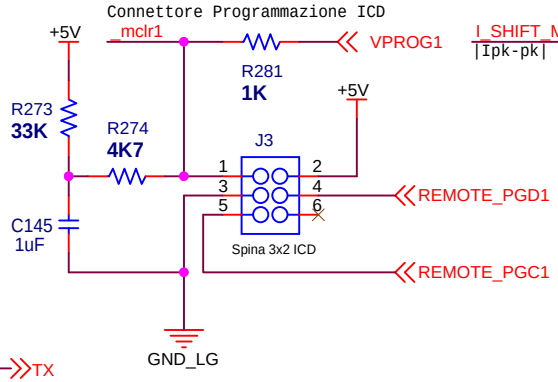

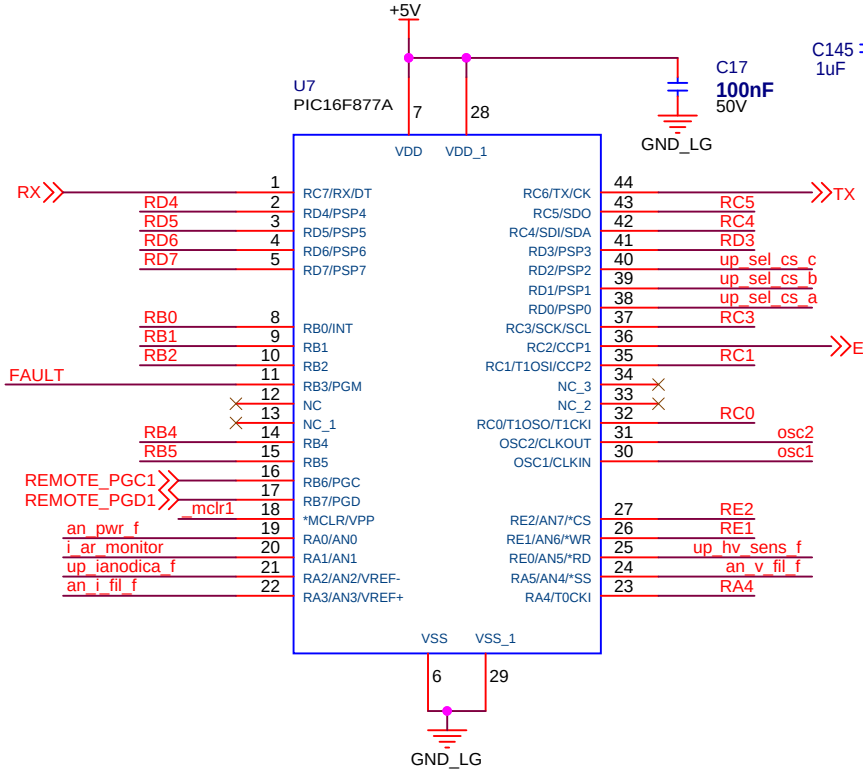

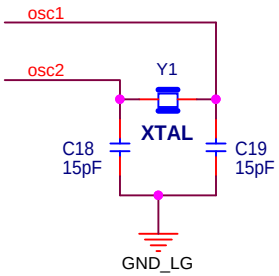

Dirette a uP da esterno

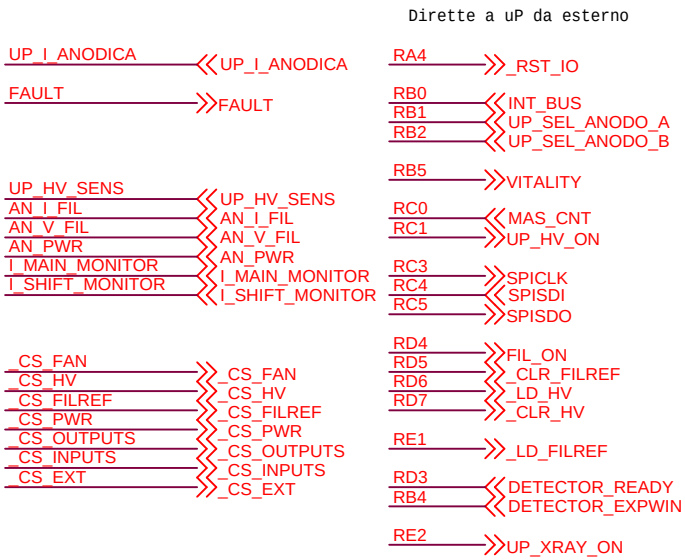

Title	MICRO	
Size A4	Document Number PCB-05-190	Rev 02
Date: Sunday, May 31, 2015	Sheet 15 of 20	

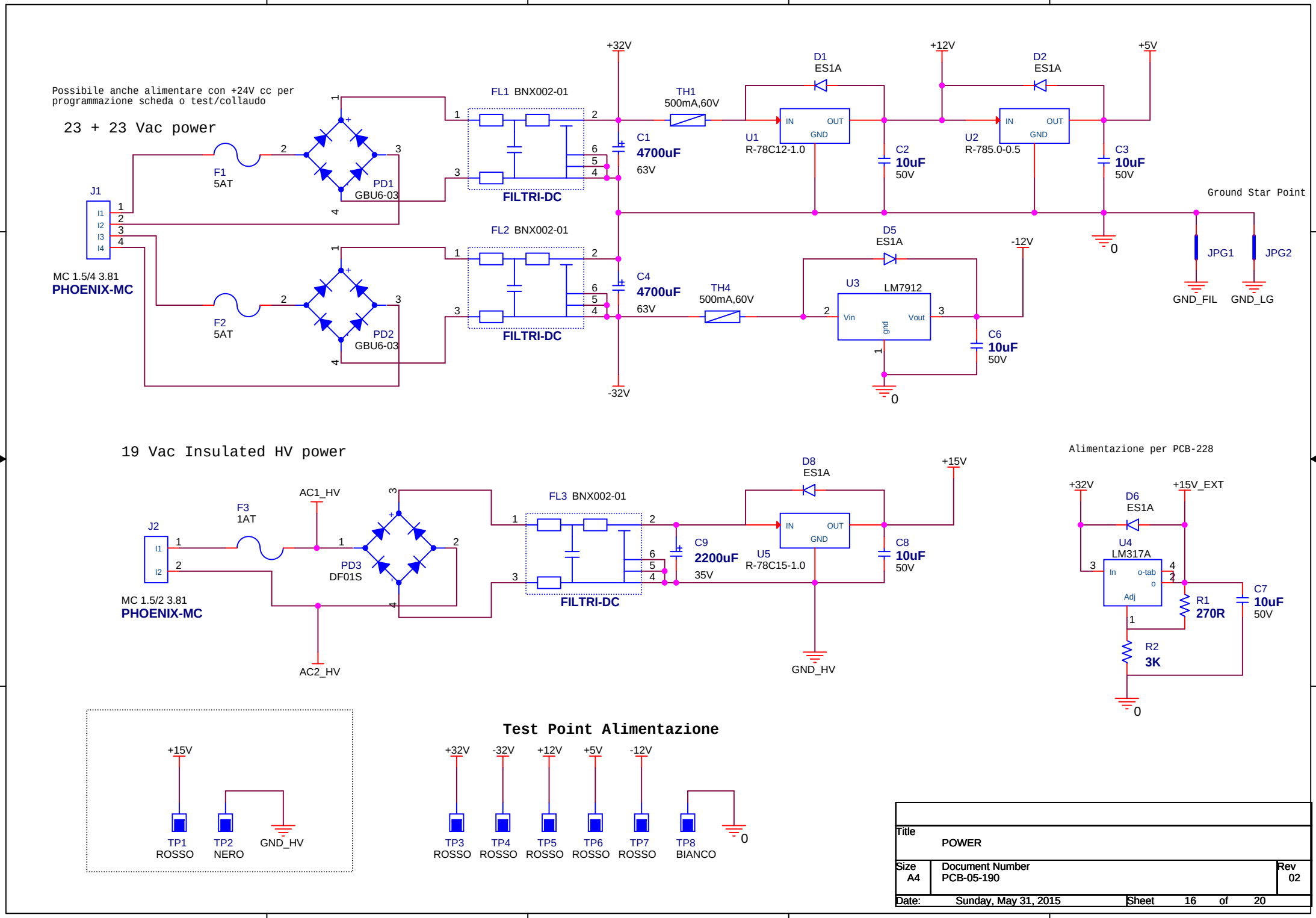

Title	POWER	
Size A4	Document Number PCB-05-190	Rev 02
Date: Sunday, May 31, 2015	Sheet 16 of 20	

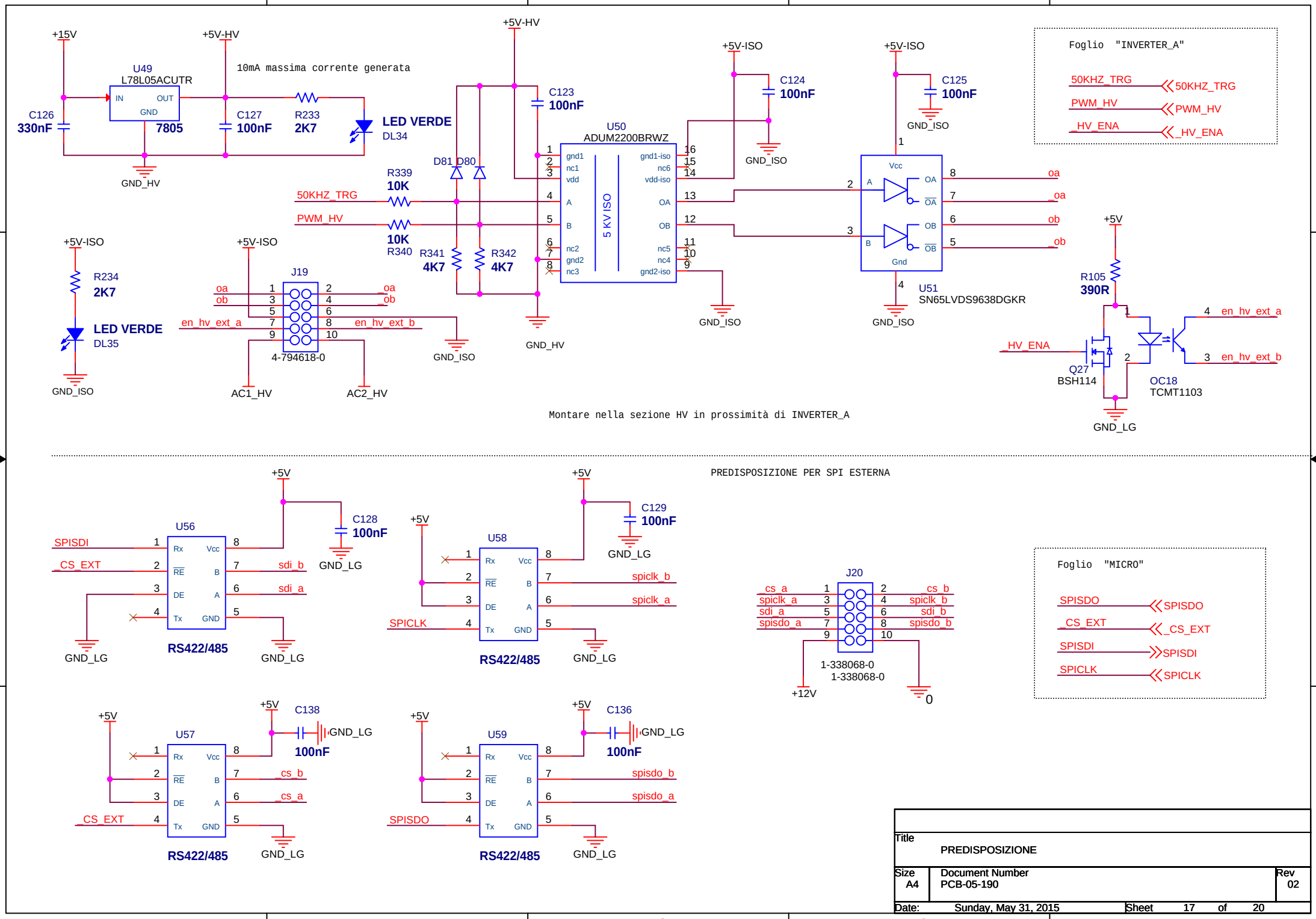

Title	PREDISPOSIZIONE	
Size A4	Document Number PCB-05-190	Rev 02
Date: Sunday, May 31, 2015	Sheet 17 of 20	

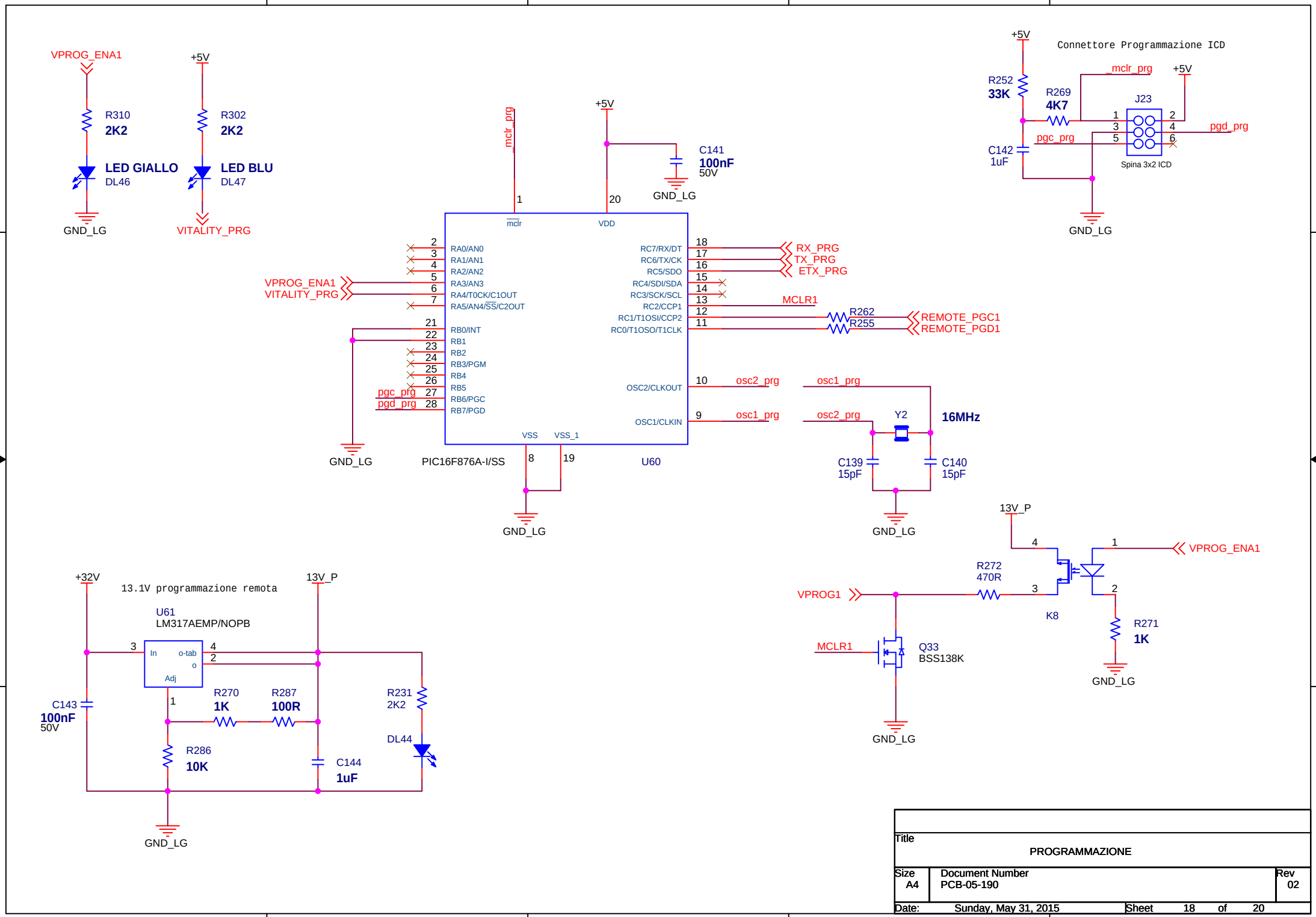
VPROG_ENA1
+5V
R310
2K2
R302
2K2
LED GIALLO
DL46
LED BLU
DL47
GND_LG
VITALITY_PRG
mclr_prg
+5V
C141
100nF
50V
GND_LG
1
20
mclr
VDD
RA0/AN0
RA1/AN1
RA2/AN2
RA3/AN3
RA4/T0CK/C1OUT
RA5/AN4/SS/C2OUT
RB0/INT
RB1
RB2
RB3/PGM
RB4
RB5
RB6/PGC
RB7/PGD
RC7/RX/DT
RC6/TX/CK
RC5/SDO
RC4/SDI/SDA
RC3/SCK/SCL
RC2/CCP1
RC1/T1OSI/CCP2
RC0/T1OSO/T1CLK
OSC2/CLKOUT
OSC1/CLKIN
VSS
VSS_1
VPROG_ENA1
VITALITY_PRG
pgc_prg
pgd_prg
RX_PRG
TX_PRG
ETX_PRG
MCLR1
R262
R255
REMOTE_PGC1
REMOTE_PGD1
osc2_prg
osc1_prg
Y2
16MHz
C139
15pF
C140
15pF
GND_LG
PIC16F876A-I/SS
U60
+5V
Connettore Programmazione ICD
R252
33K
R269
4K7
C142
1uF
J23
Spina 3x2 ICD
pgd_prg
pgc_prg
+32V
13.1V programmazione remota
13V_P
U61
LM317AEMP/NOPB
In
o-tab
o
Adj
C143
100nF
50V
R270
1K
R287
100R
R286
10K
C144
1uF
R231
2K2
DL44
VPROG1
R272
470R
K8
R271
1K
Q33
BSS138K
Title
PROGRAMMAZIONE
Size
A4
Document Number
PCB-05-190
Rev
02
Date:
Sunday, May 31, 2015
Sheet
18
of
20

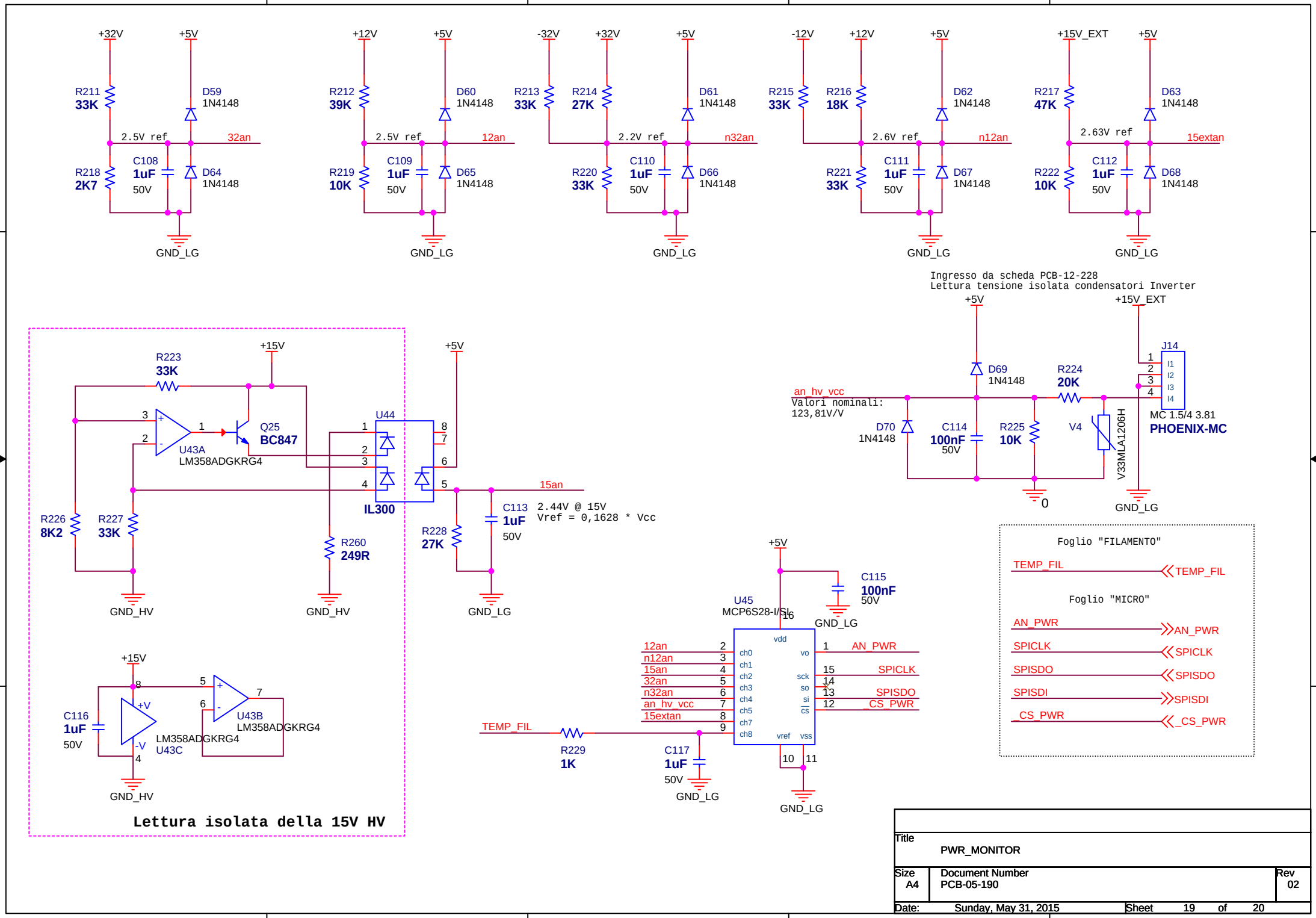

Title	PWR_MONITOR	
Size A4	Document Number PCB-05-190	Rev 02
Date: Sunday, May 31, 2015	Sheet 19 of 20	

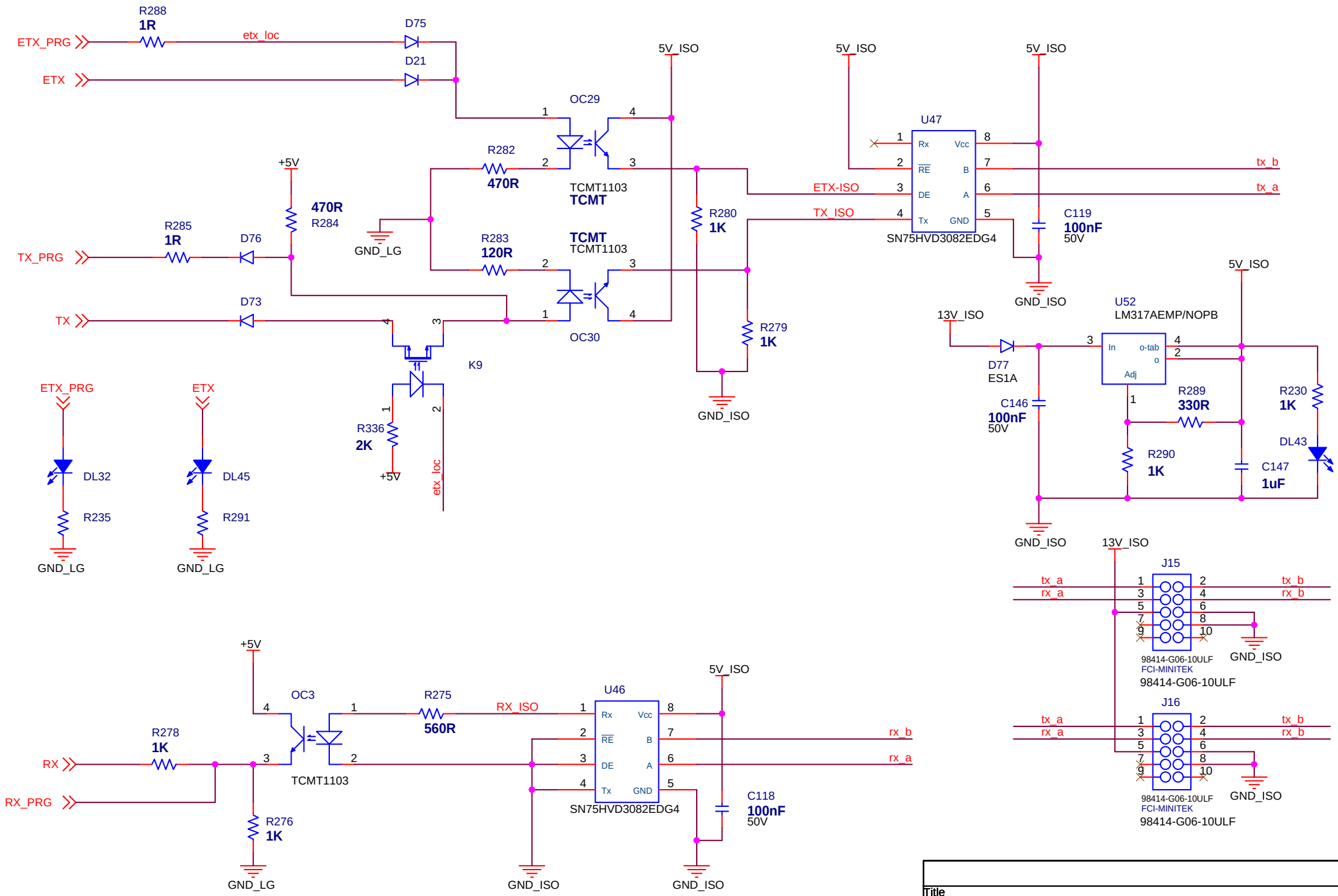

Title	RS422	
Size A4	Document Number PCB-05-190	Rev 02
Date: Sunday, May 31, 2015	Sheet 20 of 20	

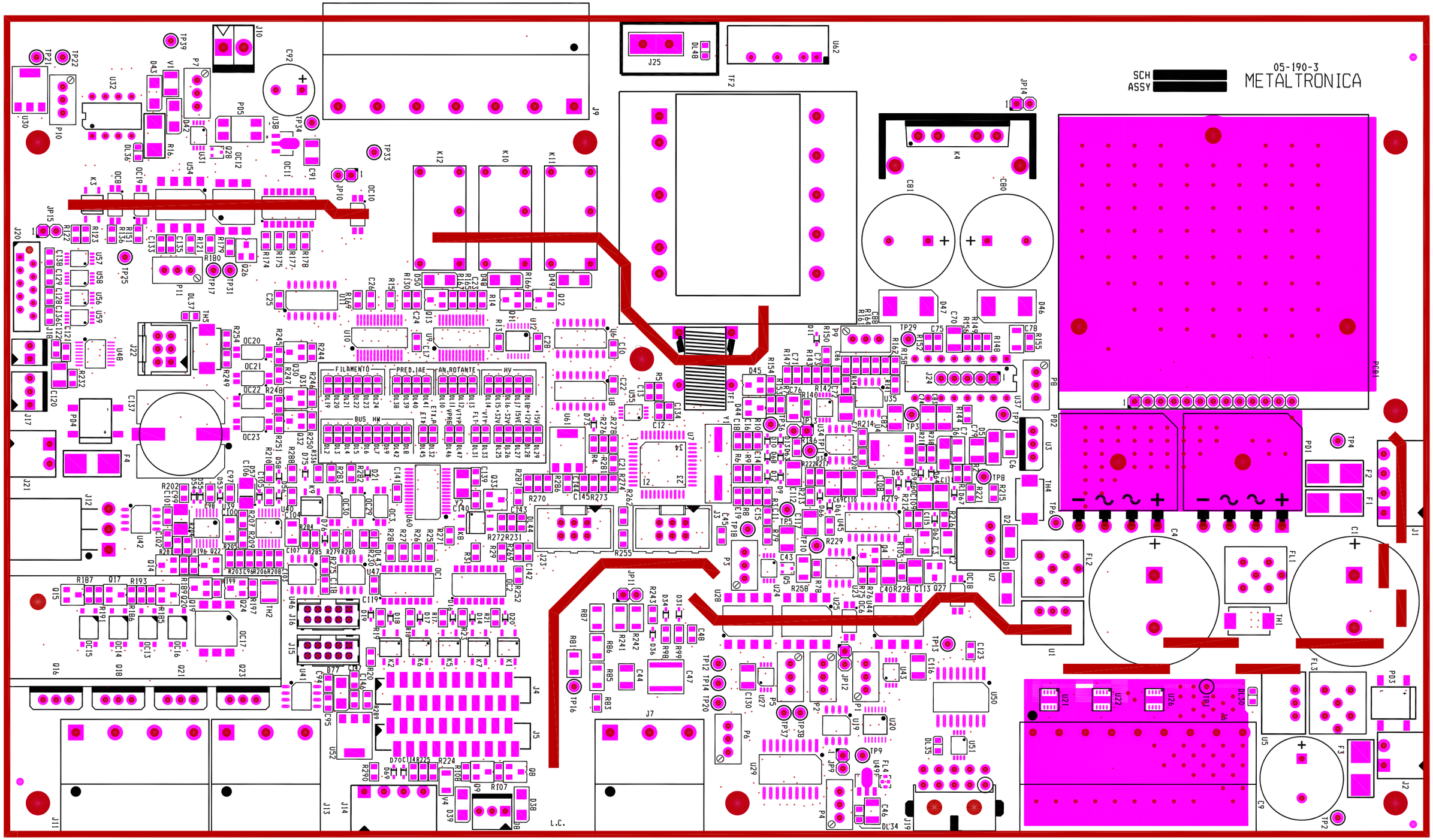

LATO COMPONENTI PCB 05-190-3

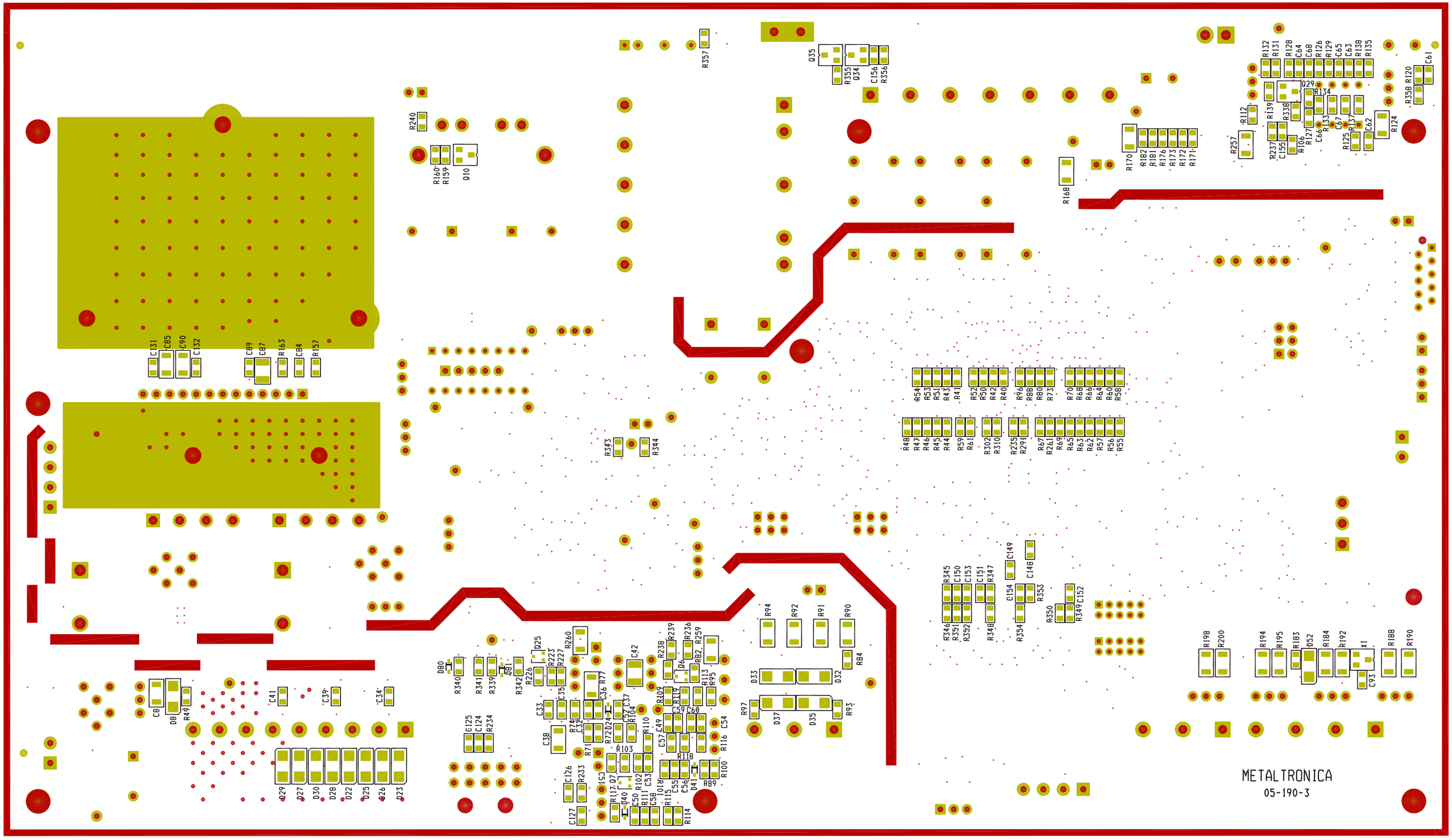

LATO SALDATURA PCB 05-190-3

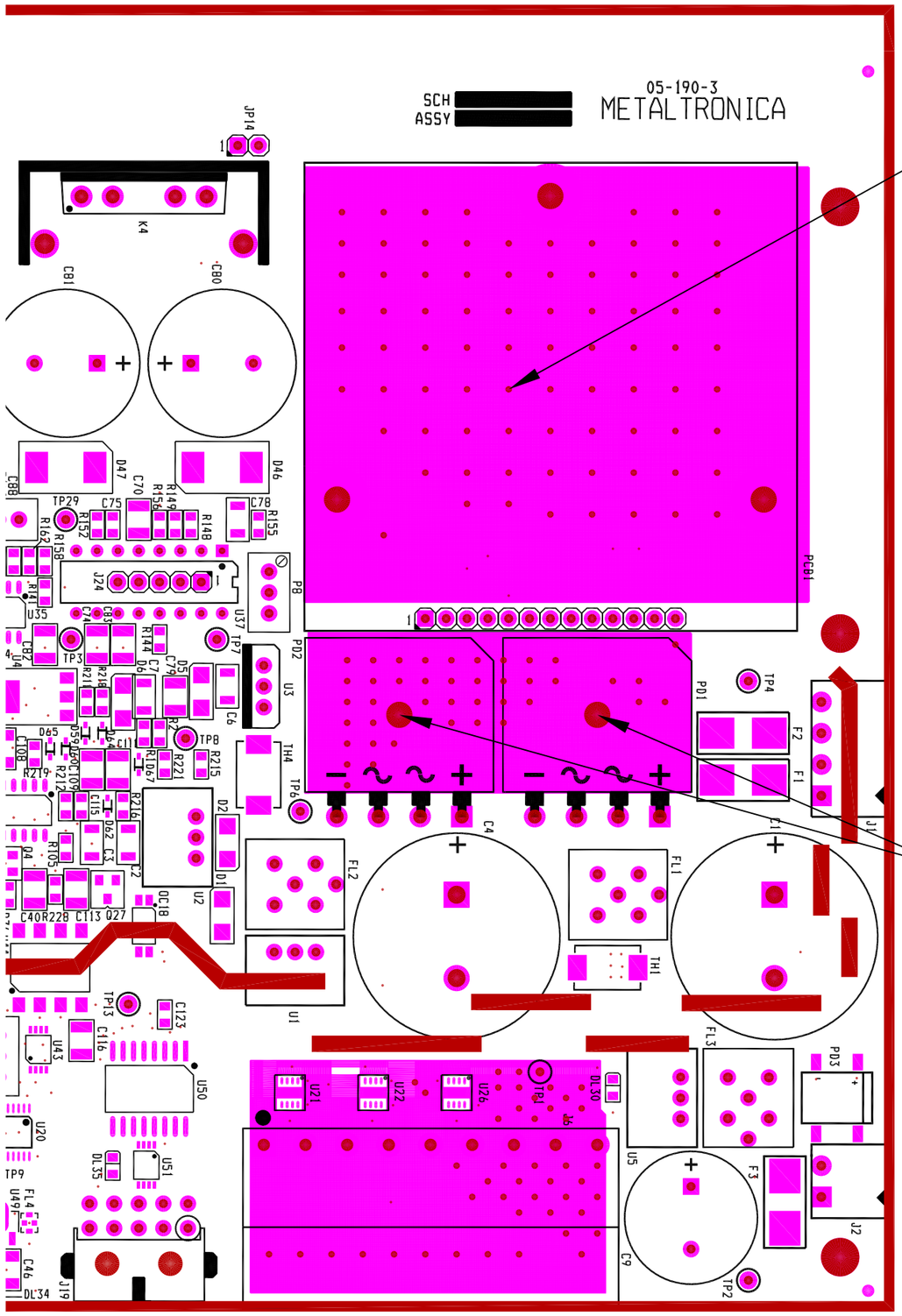

NOTA1:
a) Interporre tra modulo PCB1 e dissipatore MQ11194-00 Thermal Gap Denka tipo FSL400B 35 X 60 mm.
b) Allocare l'assieme descritto al punto "a" sul pcb inserendo la strip nella sede indicata senza saldare il componente.
c) Bloccare l'assieme precedente al punto "a" con viti VTSTC M3 X 16 INOX + rondella elastica +dado M3 INOX.
d) Eseguire la saldatura dei terminali della strip.

NOTA2:
a) Piegare a 90° i terminali di PD1 e PD2. evitando fratture e stress meccanici ai componenti.
b) Saldare PD1 e PD2 lasciando una distanza parallela tra loro e il pcb di 1 mm min.
c) Interporre tra PD1 , PD2 e pcb Thermal Pad DENKA FSL100B spessore 1mm
d) Bloccare PD1 e PD2 con viti VTCEI M3 X 10 INOX +rondela piana +rosetta elastica + dado M3 INOX

LATO COMPONENTI PCB 05-190-3

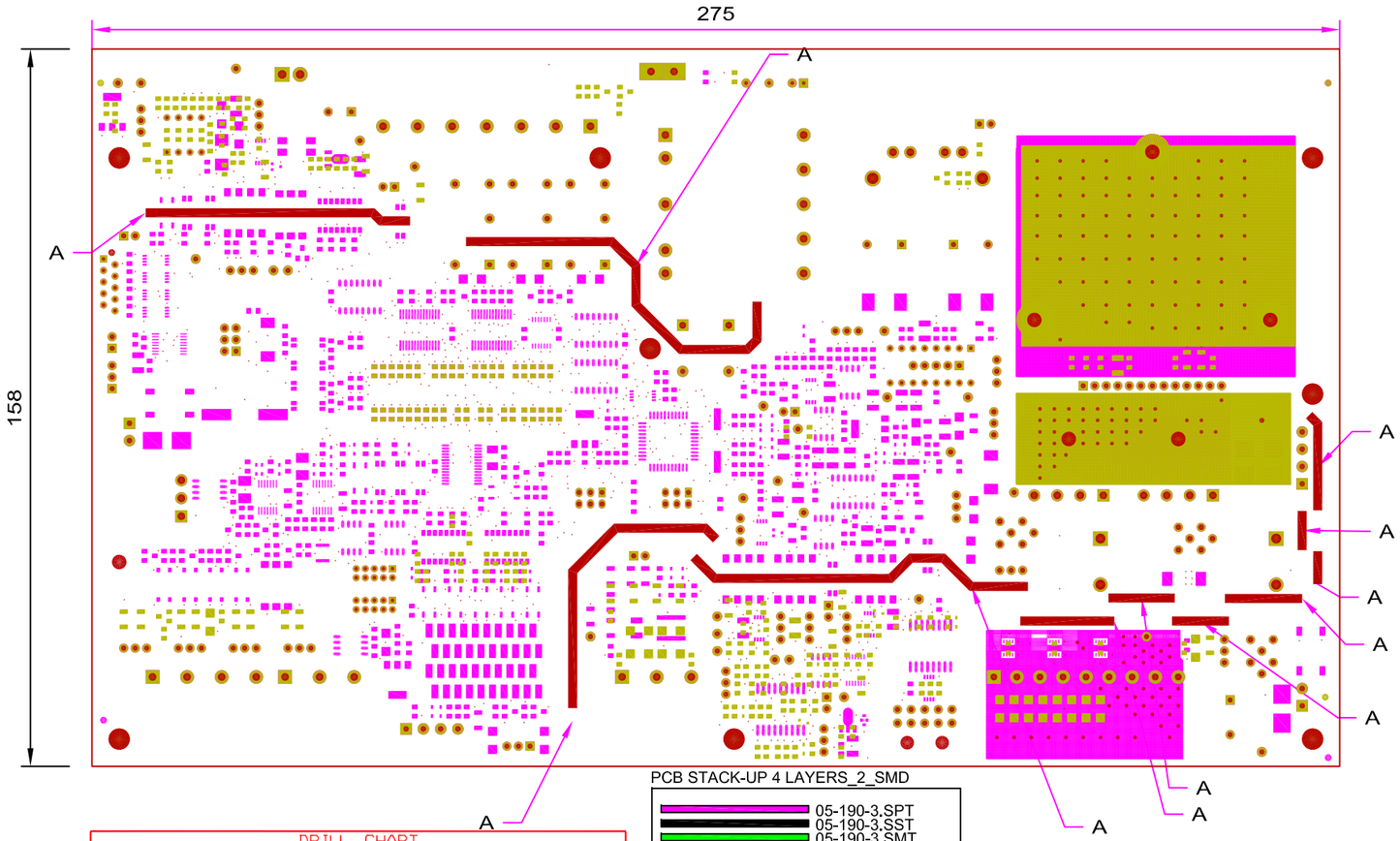

DRILL CHART				
SYM	DIAM	TOL	QTY	NOTE
○	0.300 mm		870	
+	0.800 mm		227	
⊗	1.100 mm		170	
△	1.200 mm		39	
⊞	1.500 mm		12	
◇	1.700 mm		44	
◇	1.900 mm		2	
⊠	2.200 mm		4	
⊠	2.500 mm		2	
⊞	3.000 mm		2	FORI NON METALLIZZATI
×	3.200 mm		6	FORI NON METALLIZZATI
⊥	4.700 mm		8	FORI NON METALLIZZATI
TOTAL			1386	

PCB STACK-UP 4 LAYERS_2_SMD

05-190-3.SPT
05-190-3.SST
05-190-3.SMT
05-190-3.TOP
05-190-3.GND
05-190-3.PWR
05-190-3.BOT
05-190-3.SMB
05-190-3.SSB
05-190-3.SPB

NOTE:
1) ESEGUIRE PANNELLIZZAZIONE DEL CIRCUITO SECONDO NECESSITA CON DISTACCO V-CUT E BANDELLE LATERALI MIN 5MM
2) INSERIRE FORI PER SPINE MECCANICHE SULLE DUE BANDELLE LATERALI
3) PER TUTTE LE INDICAZIONI DI LAVORAZIONE CONSULTARE IL PDF INSERITO NELLA DIRECTORY DEI GERBER

NOTA A:
ASOLE NON METALLIZZATE
LARGHE 2 MM

MATERIALE

TIPOLOGIA CIRCUITO	SUPPORTO	SPESSORE RAME
☐ MONOFACCIA	☐ FR2	☒ LATI ESTERNI 35u
☐ DOPPIA FACCIA	☒ FR4	☒ LATI INTERNI 17u
☒ MULTISTRATO	☐ ALTRO	SPESSORE SUPPORTO
N°LAYERS 4		2 mm

TRATTAMENTI

RAME DI RIPORTO ELETTROLITICO MIN. 20u	
☐ PLACC.ELETT. SURFUSO Sn/Pb 60/40–70/30 Sp.10–20u	
☐ PLACC.ELETT. RIFUSO Sn/Pb 60/40–70/30 Sp. 4–15u	
☐ RAME PASSIVATO	☒ HOT AIR LEVELING
☐ DORATURA(D=140±vPN)	☐ 0.3u ☐ 0.6u ☐ 1,0u ☐ 1,3u ☐ 2,0u
☐ BISELLATURA	NUMERO DEI CONTATTI
☐ DEPOSITO DI GRAFITE	NUMERO DEI CONTATTI

SOLDER RESIST	
☐ SERIGRAFICO Sp.	
☒ FOTOGRAFICO Sp.	13–100u
☐ COVER LAYER Sp.	25–76u

SERIGRAFIA	
☒ LATO COMP.COLORE	BIANCO
☒ LATO SALD. COLORE	BIANCO
☐	

TABELLA DEI FORI CON LAVORAZ. PARTICOLARI

TIPO	ø MET.	ø N.MET.	Q.TA'
A			
B			
C			
D			
E			
F			
G			
H			
I			
L			
M			

NOTE PARTICOLARI

TUTTI I FORI NON INDICATI DEVONO ESSERE METALLIZZATI

FILES DI DOCUMENTAZIONE ASSOCIATI PER LA LAVORAZIONE

LAYER BOT	☒ 05-190-3.BOT
LAYER TOP	☒ 05-190-3.TOP
LAYER PWR	☐
LAYER GND	☐
SERIG. BOT	☒ 05-190-3.SSB
SERIG. TOP	☒ 05-190-3.SST
LAYER IN1	☒ 05-190-3.IN1
LAYER IN2	☒ 05-190-3.IN2
LAYER IN3	☐
LAYER IN4	☐
RESIST BOT	☒ 05-190-3.SMB
RESIST TOP	☒ 05-190-3.SMT
PAST BOT	☒ 05-190-3.SPB
PAST TOP	☒ 05-190-3SPT
LAYER FOR.	☒ 05-190-3.DRL
DRILL CHART	☒
DRILL TAPE	☒ 05-190-3.TAP
MECC.DRW.	☒ PF05-190-3.DWG

A3

MATERIALE	TRATTAMENTO		METALTRONICA S.r.l.	
VEDI TABELLA	VEDI TABELLA			
TOLL.GENERALE	DISEGNATORE	DATA	TITOLO	
±0.2		31/5/15	FORATURA 05–190–3	
NOME FILE	REVISIONE	DATA	COD.INTERNO	SCALA
PF05–190–3.DWG	3			F.S.

LISTA PARTI SCHEDA 05-190-3 **DATA:2/11/2015** **REV.DOC. 01**

I COMPONENTI EVIDENZIATI IN ROSSO = NON MONTARE

Pos.	Q.tà	Rif.	Deacrizione	Valore	PN	Footprint
1	**2**	C1,C4	Cond.Elt.Vert. D=25MM	4700uF	ECOS1JA472CA	EV25
2	**12**	C2,C3,C6,C7,C8,C38,C76, C78,C85,C90,C100,C107	Cond.CRM.Multilayer	10uF	GRM31CR61H106KA12L	SMD1206
3	**1**	C9	Cond.Elt.Vert. D=16MM	2200uF	ECA1VAM222X	EV16
4	**56**	C10,C12,C13,C14,C15,C17, C21,C22,C23,C24,C25,C26, C28,C52,C61,C62,C71,C73, C84,C86,C93,C95,C97,C102, C104,C114,C115,C118,C119,C 121,C122,C123,C124,C125,C1 27,C128,C129,C131,C132,C13 3,C134,C135,C136,C138,C141 ,C143,C146,C148,C149,C150, C151,C152,C153,C154,C155,C 156	Cond.CRM.Multilayer	100nF	08051C104K4T2A	SMD0805-MET
5	**22**	C11,C16,C32,C33,C34,C39, C41,C50,C63,C65,C67,C68 ,C94,C96,C98,C101,C103, C105,C142,C144,C145,C147	Cond.CRM.Multilayer	1uF	08053C105K4Z2A	SMD0805-MET
6	**4**	C18,C19,C139,C140	Cond.CRM.Multilayer	15pF	C0805C150J5GACTU	SMD0805-MET
7	**1**	C35	Cond.CRM.Multilayer	1nF	08051A102J4T2A	SMD0805-MET
8	**4**	C36,C55,C56,C57	Cond.CRM.Multilayer	1n5F	C0805C152J5GACTU	SMD0805-MET
9	**7**	C37,C45,C48,C51,C64,C66, C75	Cond.CRM.Multilayer	10nF	C0805C103K5RAC	SMD0805-MET

Pos.	Q.tà	Rif.	Deacrizione	Valore	PN	Footprint
10	**23**	C40,C42,C43,C46,C69,C70, C74,C77,C79,C82,C83,C87, C91,C108,C109,C110,C111, C112,C113,C116,C117,C120,C 130	Cond.CRM.Multilayer	1uF	C1210C105K5RAC-TU	SMD1210
11	**1**	C44	Cond.CRM.Multilayer	820pF	1210GC821KAT1A	SMD1210
12	**1**	C47	Cond.CRM.Multilayer	5n6F	1825WC562KAT1A	SMD1825-LD13-AVX
13	**3**	C49,C54,C89	Cond.CRM.Multilayer	470pF	08051A471JAT2A	SMD0805-MET
14	**2**	C53,C72	Cond.CRM.Multilayer	47nF	C0805C473K5RAC	SMD0805-MET
15	**1**	C58	Cond.CRM.Multilayer	330pF	C0805C331J1GAC	SMD0805-MET
16	**2**	C59,C60	Cond.CRM.Multilayer	56pF	C0805C560J5GACTU	SMD0805-MET
17	**2**	C80,C81	Cond.Elt.Vert. D=18MM	100uF	EEUEE2D101S	EV18
18	**1**	C88	Cond.CRM.Multilayer	100pF	08051A101JAT2A	SMD0805-MET
19	**1**	C92	Cond.Elt.Vert. D=10MM	10uF	ECA2CM100	EV10
20	**2**	C99,C106	Cond.Elt.Tantalio solido	22uF	T491B226K016AT	ETANT-B-R
21	**1**	C126	Cond.CRM.Multilayer	330nF	08055C334KAT2A	SMD0805-MET
22	**1**	C137	Cond.ELT.Alluminio smd	1000uF	EEETK1H102AM	ALLSIZEL
23	**31**	DL2,DL3,DL4,DL5,DL6,DL7, DL8,DL9,DL10,DL11,DL12, DL13,DL14,DL15,DL16,DL17,D L18,DL19,DL20,DL21,DL22,DL 23,DL24,DL32,DL38,DL39,DL4 0,DL41,DL42,DL45,DL46	DIODO LED SMD	GIALLO	KP-2012YD	LED0805-MET-1/2
24	**11**	DL25,DL26,DL27,DL28,DL29,D L30,DL34,DL35,DL37,DL43,DL 44	DIODO LED SMD	VERDE	KP-2012SGD	LED0805-MET-1/2
25	**1**	DL31	DIODO LED SMD	ROSSO	KP-2012ID	LED0805-MET-1/2
26	**2**	DL33,DL47	DIODO LED SMD	BLU	KP-2012PBC	LED0805-MET-1/2
27	**1**	DL36	DIODO LED SMD	GIALLO	KP-2012YD	LED0805-MET-12
28	**1**	DL48	DIODO LED SMD	ARANCIO	SML-211DTT86K	LED0805-MET-1/2

Pos.	Q.tà	Rif.	Deacrizione	Valore	PN	Footprint
29	**14**	D1,D2,D5,D6,D8,D22,D23, D25,D26,D27,D28,D29,D30, D77	DIODO RETT.VELOCE	ES1A	ES1A	SMA-1/2
30	**41**	D9,D10,D11,D12,D13,D14, D16,D17,D18,D19,D20,D21, D24,D31,D34,D36,D40,D41, D53,D54,D55,D56,D57,D58, D59,D60,D61,D62,D63,D64, D65,D66,D67,D68,D69,D70, D73,D75,D76,D80,D81	DIODO SEGNALE	1N4148	1N4148WT	SOD523F1-2
31	**4**	D32,D33,D35,D37	DIODO RETT.VELOCE	RS1M-13-F	RS1M-13-F	SMA-1/2
32	**7**	D38,D39,D42,D43,D48,D49,D 50	DIODO RETT.VELOCE	ES1B	ES1B	SMA-1/2
33	**2**	D44,D45	DIODO SEGNALE	BAT754S	BAT754S	SOT23-123
34	**2**	D46,D47	DIODO RETT.VELOCE	SK56C	SK56C	SMC-1/2
35	**1**	D52	DIODO RETT.VELOCE	ES1G	ES1G	SMA-1/2
36	**3**	FL1,FL2,FL3	FILTRO EMI DC	BNX002-01	BNX002-01	BNX002-01
37	**1**	FL4	FILTRO SOPPRESSIONE	NFM21PC474R1C3	NFM21PC474R1C3D	NFM21PC-0805
38	**2**	F1,F2	FUSIBILE +PORTAFUSIBILE	5AT	0154005.DRT	LITTLEFUSE-154
39	**2**	F3,F4	FUSIBILE +PORTAFUSIBILE	1AT	0154001.DRT	LITTLEFUSE-154
41	**7**	JP9,JP10,JP11,JP12,JP13, JP14,JP15	HEADER DRITTO 2 PIN PASSO 2.54	TSW-102-09-T-S-RA	TSW-102-09-T-S-RA	2SIP100
42	**1**	J1	CONNETTORE 4 VIE P.3.81	MC 1.5/4 3.81	1803293	MC1.5-4-G-3.81
43	**2**	J2,J21	CONNETTORE 2 VIE P.3.81	MC 1.5/2 3.81	1803277	MC1.5-2-G-3.81
44	**2**	J3,J23	HEADER BOXED 2 X 3 PIN P.2.54	Spina 3x2 ICD	9185066324	SEK_0918506X32X_HARTING
45	**2**	J4,J5	CONNETTORE 20PIN P.1.27	9-338069-0	9-338069-0	TYCO-2-338069-0
46	**1**	J6	CONNETTORE 9 PIN P.5.08 90°	MSTB 2,5/ 9-G-5,08	1759088	MSTB2.5-5.08-9
47	**2**	J7,J13	CONNETTORE 3 PIN P.7.62 90°	GMSTBA 2,5/ 3-G-7,62	1766246	GMSTB2.5-7.62-3
48	**2**	J8,J17	CONN. DRITTO 3 PIN PASSO 2.54	MLSS-100-3	MLSS100-3	MLSS100-03
49	**1**	J9	CONNETTORE 7 PIN P.7.62 90°	GMSTBA 2,5/7-G-7,62	1766288	GMSTB2.5-7.62-7
50	**1**	J10	CONN. DRITTO 2 PIN PASSO 3.96	MASCON-156	MLSS156-2	MLSS156-02
51	**1**	J11	CONNETTORE 4 PIN P.7.62 90°	GMSTBA 2,5/ 4-G-7,62	1766259	GMSTB2.5-7.62-4
52	**1**	J12	CONN. 90° 3 PIN PASSO 2.54	MLAS-3	MLAS156-3	MLAS156-03

Pos.	Q.tà	Rif.	Deacrizione	Valore	PN	Footprint
53	**1**	J14	CONNETTRORE 4 VIE P.3.81	MC 1.5/4 3.81	1803293	MC1.5-4-G-3.81
54	**2**	J15,J16	CONN. 2 X 5 P.2MM DRITTO	98414-G06-10ULF	98414-G06-10ULF	FCI-98414-G-06-10
55	**1**	J18	CONN. DRITTO 2 PIN PASSO 2.54	MLSS-100-2	MLSS100-2	MLSS100-02
56	**1**	J19	CONN. 90° 2 X 5 PASSO 3 MM	4-794618-0	4-794618-0	TYCO-4-794618-0
57	**1**	J20	CONN. DRITTO 2 X 5 P.127	1-338068-0	1-338068-0	TYCO-1-338068-0
58	**1**	J22	CONN. AMPMODU II 6 X 2 DRITTO	5-103168-1	5-103168-1	5-103168-1-TYCO
59	**1**	J24	PRED.NE PER XR2206 EXT	NON MONTARE		5SIP100
60	**1**	J25	TERMINALE DRITTO FASTON	6.35 X 0.84	63849-1 TE	FAS1
61	**8**	K1,K2,K3,K5,K6,K7,K8,K9	RELE' STATO SOLIDO SMD	CPC1017NTR	CPC1017NTR	CPC1017N-CLARE
62	**1**	K4	RELE' STATO SOLIDO PTH	CPC1918	CPC1918	CPC1918-CLARE+DISS
63	**3**	K10,K11,K12	RELE' 12V 6A DOPPIO	SPDT-6A	32.21.7.012.2000	32.21- FINDER
64	**2**	OC1,OC2	OPTOISOLATORE QUADRUPLO	TCMT4100	TCMT4100	MINIFLAT16
65	**12**	OC3,OC6,OC8,OC10,OC18,OC 19,OC20,OC21,OC22, OC23,OC29,OC30	OPTOISOLATORE SINGOLO	TCMT1103	TCMT1103	MINIFLAT4
66	**1**	OC11	OPTOISOLATORE QUADRUPLO	TCMT4106	TCMT4106	MINIFLAT16
67	**2**	OC12,OC17	OPTOISOLATORE SINGOLO	MOC3063SR2M	MOC3063SR2M	PSMD6
68	**4**	OC13,OC14,OC15,OC16	OPTOISOLATORE SINGOLO	FODM3053	FODM3053R2V_NF098	MFP4
69	**1**	PCB1	MODULO METALTRONICA	PCB-11-219	PCB-11-219-1	PCB-11-219
70	**2**	PD1,PD2	PONTE DIODI PTH	GBU6-03	GBU603	GBU6H
71	**2**	PD3,PD4	PONTE DIODI SMD	DF01S	DF01S	DF01S
72	**1**	PD5	PONTE DIODI SMD	MB4S	MB4S-E3/45	TO269AA
73	**4**	P1,P5,P7,P9	TRIMMER MULTIGIRI VERTICALE	5K	3296W-1-502LF	3296W-BOURNS
74	**3**	P2,P3,P11	TRIMMER MULTIGIRI VERTICALE	100K	3296W-1-104LF	3296W-BOURNS
75	**1**	P4	TRIMMER MULTIGIRI VERTICALE	10K	3296W-1-103LF	3296W-BOURNS
76	**2**	P6,P8	TRIMMER MULTIGIRI VERTICALE	20K	3296W-1-203LF	3296W-BOURNS
77	**1**	P10	TRIMMER MULTIGIRI VERTICALE	20R	3296W-1-200LF	3296W-BOURNS
78	**7**	Q4,Q8,Q9,Q27,Q29,Q34, Q35	MOSFET CANALE N 100V 0.85A	BSH114	BSH114	SOT23-123
79	**4**	Q5,Q6,Q25,Q28	TRANSISTOR NPN 45V 0.1A	BC847BW	BC847BW	SOT323_123
80	**1**	Q7	TRANSISTOR NPN 45V 0.1A	BC857BW	BC857BW	SOT323_123

Pos.	Q.tà	Rif.	Deacrizione	Valore	PN	Footprint
81	**16**	Q10,Q11,Q12,Q13,Q14,Q15, Q17,Q19,Q20,Q22,Q24, Q26,Q30,Q31,Q32,Q33	MOSFET CANALE N 50V 0.2A	BSS138K	BSS138K	SOT23-123
82	**4**	Q16,Q18,Q21,Q23		BTA16-BW (no snub)	BTA16-600BWRG	TO220AB
83	**1**	R1	RESISTORE THICK FILM 1/8W 1%	270R	CRG0805F270R	SMD0805-MET
84	**1**	R2	RESISTORE THICK FILM 1/8W 1%	3K	CRCW08053K00FKEA	SMD0805-MET
85	**32**	R3,R4,R5,R8,R48,R74,R89, R103,R109,R115,R121,R122,R 123,R128,R132,R151,R158,R2 29,R230,R236,R245,R247,R24 9,R251,R270,R271,R276,R278 ,R279,R280,R281,R290	RESISTORE THICK FILM 1/8W 1%	1K	CRCW08051K00FKEA	SMD0805-MET
86	**30**	R6,R13,R15,R84,R114,R127,R 136,R139,R142,R146,R147,R1 61,R169,R173,R176,R181,R18 2,R201,R203,R206,R208,R219 ,R222,R225,R238,R239,R286, R343,R355,R356	RESISTORE THICK FILM 1/8W 1%	10K	CRCW080510K0FKEA	SMD0805-MET
87	**4**	R7,R44,R45,R126	RESISTORE THICK FILM 1/8W 1%	6K8	CRCW08056K80FKEA	SMD0805-MET
88	**9**	R9,R129,R133,R202,R204, R205,R207,R209,R210	RESISTORE THICK FILM 1/8W 1%	100K	CRCW0805100KFKEA	SMD0805-MET
89	**20**	R10,R25,R26,R27,R28,R29, R31,R78,R82,R93,R97,R112, R150,R159,R232,R254,R269,R 274,R341,R342	RESISTORE THICK FILM 1/8W 1%	4K7	PANERJ6ENF4701V	SMD0805-MET
90	**10**	R14,R17,R18,R19,R20,R21, R23,R105,R111,R130	RESISTORE THICK FILM 1/8W 1%	390R	CRCW0805390RFKEA	SMD0805-MET
91	**1**	R16	RESISTORE SMD 2616 2W	10R	SMW210RJT	SM2-TYCO

Pos.	Q.tà	Rif.	Deacrizione	Valore	PN	Footprint
92	**37**	R40,R41,R42,R43,R47,R50, R51,R52,R53,R54,R55,R56, R57,R58,R59,R60,R61,R62, R63,R64,R65,R66,R67,R68, R69,R70,R71,R73,R80,R88, R96,R231,R235,R261,R291, R302,R310	RESISTORE THICK FILM 1/8W 1%	2K2	PANERJ6ENF2201V	SMD0805-MET
93	**7**	R46,R49,R72,R104,R118, R131,R134	RESISTORE THICK FILM 1/8W 1%	3K3	CRCW08053K30FKEA	SMD0805-MET
94	**3**	R75,R119,R144	RESISTORE THICK FILM 1/8W 1%	220R	CRG0805F220R	SMD0805-MET
95	**4**	R76,R157,R164,R336	RESISTORE THICK FILM 1/8W 1%	2K	CRCW08052K00FKEA	SMD0805-MET
96	**1**	R77	RESISTORE THICK FILM 1/4W 1%	1K5	CRCW12061K50FKEA	SMD1206
97	**13**	R79,R95,R102,R106,R211, R213,R215,R220,R221,R223,R 227,R252,R273	RESISTORE THICK FILM 1/8W 1%	33K	CRCW080533K0FKEA	SMD0805-MET
98	**1**	R81	RESISTORE THICK FILM 1/4W 1%	18K	CRCW120618K0FKEA	SMD1206
99	**4**	R83,R113,R141,R216	RESISTORE THICK FILM 1/8W 1%	18K	CRCW080518K0FKEA	SMD0805-MET
100	**8**	R85,R86,R87,R90,R91,R92, R94,R170	RESISTORE THICK FILM 1/4W 1%	130K	CRCW1206130KFKEA	SMD1206
101	**18**	R98,R145,R148,R149,R152, R155,R165,R166,R167,R179,R 189,R191,R196,R199,R244,R2 46,R248,R250	RESISTORE THICK FILM 1/8W 1%	5K6	CRCW08055K60FKEA	SMD0805-MET
102	**1**	R99	RESISTORE THICK FILM 1/8W 1%	4K32	CRCW08054K32FKEA	SMD0805-MET
103	**16**	R100,R255,R262,R272,R282,R 284,R345,R346,R347,R348,R3 49,R350,R351,R352,R353,R35 4	RESISTORE THICK FILM 1/8W 1%	470R	CRCW0805470RFKEA	SMD0805-MET
104	**2**	R101,R171	RESISTORE THICK FILM 1/8W 1%	1K2	CRCW08051K20FKEA	SMD0805-MET
105	**4**	R107,R108,R160,R163,	RESISTORE THICK FILM 1/8W 1%	56K	CRCW080556K0FKEA	SMD0805-MET
106	**1**	R110	RESISTORE THICK FILM 1/8W 1%	8K45	CRCW08058K45FKEA	SMD0805-MET
107	**1**	R116	RESISTORE THICK FILM 1/8W 1%	10R	CR0805-FX-10R0GLF	SMD0805-MET
108	**1**	R117	RESISTORE THICK FILM 1/8W 1%	120K	CRCW0805120KFKEA	SMD0805-MET

Pos.	Q.tà	Rif.	Deacrizione	Valore	PN	Footprint
109	**2**	R120,R358	RESISTORE THICK FILM 1/8W 1%	15R	CRG0805F15R	SMD0805-MET
110	**1**	R124	RESISTORE THICK FILM 1/4W 1%	82R	CRCW120682R0FKEAHP	SMD1206
111	**3**	R125,R237,R287	RESISTORE THICK FILM 1/8W 1%	100R	PHY232273461001	SMD0805-MET
112	**2**	R135,R162	RESISTORE THICK FILM 1/8W 1%	12K	CPF0805B12KE1	SMD0805-MET
113	**1**	R137	RESISTORE THICK FILM 1/8W 1%	47R	CRCW080547R0FKEA	SMD0805-MET
114	**1**	R138	RESISTORE THICK FILM 1/8W 1%	16K5	MCTC0525B1652T5E	SMD0805-MET
115	**3**	R140,R172,R212	RESISTORE THICK FILM 1/8W 1%	39K	CRCW080539K0FKEA	SMD0805-MET
116	**3**	R143,R214,R228	RESISTORE THICK FILM 1/8W 1%	27K	CRCW080527K0FKEA	SMD0805-MET
117	**2**	R153,R154	RESISTORE THICK FILM 1/8W 1%	200R	CRCW0805200RFKEA	SMD0805-MET
118	**11**	R156,R174,R175,R177,R178,R180,R185,R186,R187,R193,R197	RESISTORE THICK FILM 1/8W 1%	820R	PANERJ6GEYJ821V	SMD0805-MET
119	**1**	R168	RESISTORE THICK FILM 1/4W 1%	15K	CRCW120615K0FKEAHP	SMD1206
120	**1**	R183	RESISTORE THICK FILM 1/4W 1%	430K	CRCW0805430KFKEA	SMD0805-MET
121	**1**	R184	RESISTORE THICK FILM 1/8W 1%	1K	CR1206-FX-1001ELF	SMD1206
122	**6**	R188,R190,R194,R195,R198,R200	RESISTORE THICK FILM 1/4W 1%	100R	CRCW1206100RFKEAHP	SMD1206
123	**1**	R192	RESISTORE THICK FILM 1/4W 1%	47R	CRCW120647R0FKEA	SMD1206
124	**2**	R217,R344	RESISTORE THICK FILM 1/8W 1%	47K	CRCW080547K0FKEA	SMD0805-MET
125	**4**	R218,R233,R234,R357	RESISTORE THICK FILM 1/8W 1%	2K7	CRCW08052K70FKEA	SMD0805-MET
126	**2**	R224,R243	RESISTORE THICK FILM 1/8W 1%	20K	CRCW080520K0FKEA	SMD0805-MET
127	**1**	R226	RESISTORE THICK FILM 1/8W 1%	8K2	CRCW08058K20FKEA	SMD0805-MET
128	**2**	R241,R242	RESISTORE THICK FILM 1/4W 1%	220K	CRCW1206220KFKEA	SMD1206
129	**4**	R257,R258,R259,R260	RESISTORE THICK FILM 1/4W 1%	249R	CRCW1206249RFKEA	SMD1206
130	**1**	R275	RESISTORE THICK FILM 1/8W 1%	560R	CRCW0805560RFKEA	SMD0805-MET
131	**1**	R283	RESISTORE THICK FILM 1/8W 1%	120R	CRCW0805120RFKEA	SMD0805-MET
132	**2**	R285,R288	RESISTORE THICK FILM 1/8W 1%	1R	ERJ6RQF1R0V	SMD0805-MET
133	**1**	R289	RESISTORE THICK FILM 1/8W 1%	330R	Vari	SMD0805-MET
134	**1**	R338	RESISTORE THICK FILM 1/8W 1%	0R	CRCW08050000ZSTA	SMD0805-MET
135	**3**	R339,R340,R240	RESISTORE THICK FILM 1/8W 1%	10K	PANERJ6GEYJ103V	SMD0805-MET
136	**1**	TF1	TRASFORMATORE METALTRONICA	TF108	TF108-MEDEL	TF108-MEDEL-C
137	**1**	TF2	TRASFORMATORE METALTRONICA	TF208	TF208-MEDEL	TF208-MEDEL+5MM
138	**3**	TH1,TH3,TH4	FUSIBILE RIPRISTINABILE	500mA,60V	SMD050F-2	SMD050F_TYCO

Pos.	Q.tà	Rif.	Deacrizione	Valore	PN	Footprint
139	**1**	TH2	FUSIBILE RIPRISTINABILE	100mA	MICROSMD010F	MICROSMD010F
140	**6**	TP1,TP3,TP4,TP5,TP6,TP7	TEST POINT FORO SU PCB 1MM	ROSSO	RS200-207	TESTPOINT_1MM
141	**2**	TP2,TP13	TEST POINT FORO SU PCB 1MM	NERO	RS200-203	TESTPOINT_1MM
142	**2**	TP8,TP11	TEST POINT FORO SU PCB 1MM	BIANCO	RS200-201	TESTPOINT_1MM
143	**17**	TP9,TP10,TP12,TP14,TP16, TP17,TP18,TP20,TP21,TP22,TP25,TP29,TP33,TP34,TP37,TP38,TP39	TEST POINT FORO SU PCB 1MM	GIALLO	RS200-202	TESTPOINT_1MM
144	**2**	TP31,TP36	TEST POINT FORO SU PCB 1MM	VERDE	RS200-208	TESTPOINT_1MM
145	**1**	U1	REG. TENSIONE 12 V 1 A	R-78C12-1.0	R-78C12-1.0	R-78CXX-1.0-RECOM
146	**1**	U2	REG. TENSIONE 5 V 0.5A	RECOM-7805	R-785.0-0.5	R-78XX-0.5-RECOM
147	**1**	U3	REG. TENSIONE NEG 12 V 1 A	LM7912	LM7912CT	TO220RV
148	**2**	U4,U30	REG. TENSIONE ADJ	LM317A	LM317AEMP/NOPB	SOT223-1234
149	**1**	U5	REG. TENSIONE 15 V 1 A	R-78C15-1.0	R-78C15-1.0	R-78CXX-1.0-RECOM
150	**1**	U6	CIRCUITO INTEGRATO	SN74LVC138AD	SN74LVC138ADRG4	SOG.050/16/WG.244/L.394
151	**1**	U7	MICROCONTROLLORE	PIC16F877A	PIC16F877A-I/PT	QUAD.80M/44/WG12.00
152	**2**	U8,U11	CIRCUITO INTEGRATO	CD4555B	CD4555BM	SOG.050/16/WG.244/L.394
153	**2**	U9,U10	CIRCUITO INTEGRATO	MCP23S17	MCP23S17-E/SS	SOG.65M/28/WG8.20/L10.80
154	**1**	U12	CIRCUITO INTEGRATO	CD4023BPW	CD4023BPW	PW-14 TEXAS
155	**1**	U19	CIRCUITO INTEGRATO	NE555DT	NE555DT	SO8
156	**1**	U20	CIRCUITO INTEGRATO	CD4013B	CD4013BPWR	PW-14 TEXAS
157	**3**	U21,U22,U26	CIRCUITO INTEGRATO	UCC27525DSD	UCC27525DSDT	SON65P300X300X80-9N
158	**2**	U23,U36	CIRCUITO INTEGRATO	DAC8512FSZ	DAC8512FSZ	SO8
159	**5**	U24,U27,U31,U34,U43	CIRCUITO INTEGRATO	LM358ADGKRG4	LM358ADGKRG4	SOG.65M/8/WG5/L3.1
160	**4**	U25,U28,U44,U54	CIRCUITO INTEGRATO	IL300-DEFG-X007	IL300-DEFG-X007	SMD-8
161	**1**	U29	CIRCUITO INTEGRATO	UC3841DW	UC3841DW	SOG.050/18/WG.420/L.462
162	**1**	U32	CIRCUITO INTEGRATO	LM331N/NOPB	LM331N/NOPB	B8
163	**1**	U35	CIRCUITO INTEGRATO	LM1458M	LM1458M	SO8
164	**1**	U37	CIRCUITO INTEGRATO	XR2206CP	XR2206CP	B16
165	**1**	U38	CIRCUITO INTEGRATO	LR8N8-G	LR8N8-G	SOT89_123
166	**2**	U39,U40	CIRCUITO INTEGRATO	LM324PT	LM324PT	SOG.65M/14/WG6.4/L5.00
167	**2**	U41,U42	CIRCUITO INTEGRATO	ACS712ELCTR-05B-T	ACS712ELCTR-05B-T	SO8
168	**1**	U45	CIRCUITO INTEGRATO	MCP6S28-I/SL	MCP6S28-I/SL	SO16

Pos.	Q.tà	Rif.	Deacrizione	Valore	PN	Footprint
169	**2**	U46,U47	CIRCUITO INTEGRATO	SN75HVD3082EDG4	SN75HVD3082EDG4	SO8
170	**1**	U48	CIRCUITO INTEGRATO	MAX6661AEE	MAX6661AEE	SOG.025/16/WG.244/L.196
171	**1**	U49	CIRCUITO INTEGRATO	L78L05ACUTR	L78L05ACUTR	SOT89_123
172	**1**	U50	CIRCUITO INTEGRATO	ADUM2200BRWZ	ADUM2200BRWZ	SOG.050/16/WG.420/L.412
173	**1**	U51	CIRCUITO INTEGRATO	SN65LVDS9638DGKR	SN65LVDS9638DGKR	SOG.65M/8/WG5/L3.1
174	**2**	U52,U61	CIRCUITO INTEGRATO	LM317AEMP/NOPB	LM317AEMP/NOPB	SOT223-1234
175	**1**	U55	CIRCUITO INTEGRATO	MCP6S22-I/MS	MCP6S22-I/MS	SOG.65M/8/WG4.9/L3.00
176	**4**	U56,U57,U58,U59	CIRCUITO INTEGRATO	SN65HVD3085EDGK	SN65HVD3085EDGK	SOG.65M/8/WG5/L3.1
177	**1**	U60	MICROCONTROLLORE	PIC16F876A-I/SS	PIC16F876A-I/SS	SOG.65M/28/WG8.20/L10.80
178	**1**	U62	DC/DC OPTOISOLATO 15/15V	TMA1515S	TMA1515S	TMHXXXXS-TRACO
179	**1**	V1	VARISTORE	V18MLA1210H	V18MLA1210H	SMD1210
180	**1**	V4	VARISTORE	V33MLA1206H	V33MLA1206H	SMD1206
181	**1**	X1	QUARZO	SMDB3	SMDB3	SOT23-123
182	**1**	Y1	QUARZO	3.6864MHz	9C-3.6864MAAJ-T	HC49SMD
183	**1**	Y2	QUARZO	16MHZ	7A-16.000MAAJ-T	TA-5X3.2-TXC
184	**1**		DISSIPATORE PER PCB 11-219-XX	MQ11194-01	METALTRONICA	
185	**1**		THERMAL-GAP DENKA	FSL400B	35mm x 60mm	**VEDI NOTA 2**
186	**8**		DISTANZIALI NYLON	ESSENTRA SRS4-5-01	H=7.9 mm	**VEDI NOTA 3**
187	**3**		VITE VTSTC	M3 X 16 INOX	X FISSAGGIO MODULO	**VEDI NOTA 4**
188	**5**		DADI M3 INOX			**VEDI NOTA 4/5**
189	**5**		ROSETTA ELASTICA INOX Øi 3.2 mm			**VEDI NOTA 4/5**
190	**QB**		THERMAL PAD DENKA	FSL100B (1MM)		**VEDI NOTA 5**
191	**2**		VITE VTCEI	M3 X 10 INOX		**VEDI NOTA 5**
192	**1**		CIRCUITO STAMPATO REV 3		**05-190-3**	**METALTRONICA**
			NOTE			
		1	UTILIZZARE ULTIMA REVISIONE RILASCIATA			
		2	INTERPOSTO TRA PCB1 E POS.184			
		3	INSERITI NEI FORI FISSAGGIO SCHEDA			
		4	UTILIZZATI PER FISSAGGIO PCB1			
		5	UTILIZZATI PER FISSAGGIO PD1/PD2			