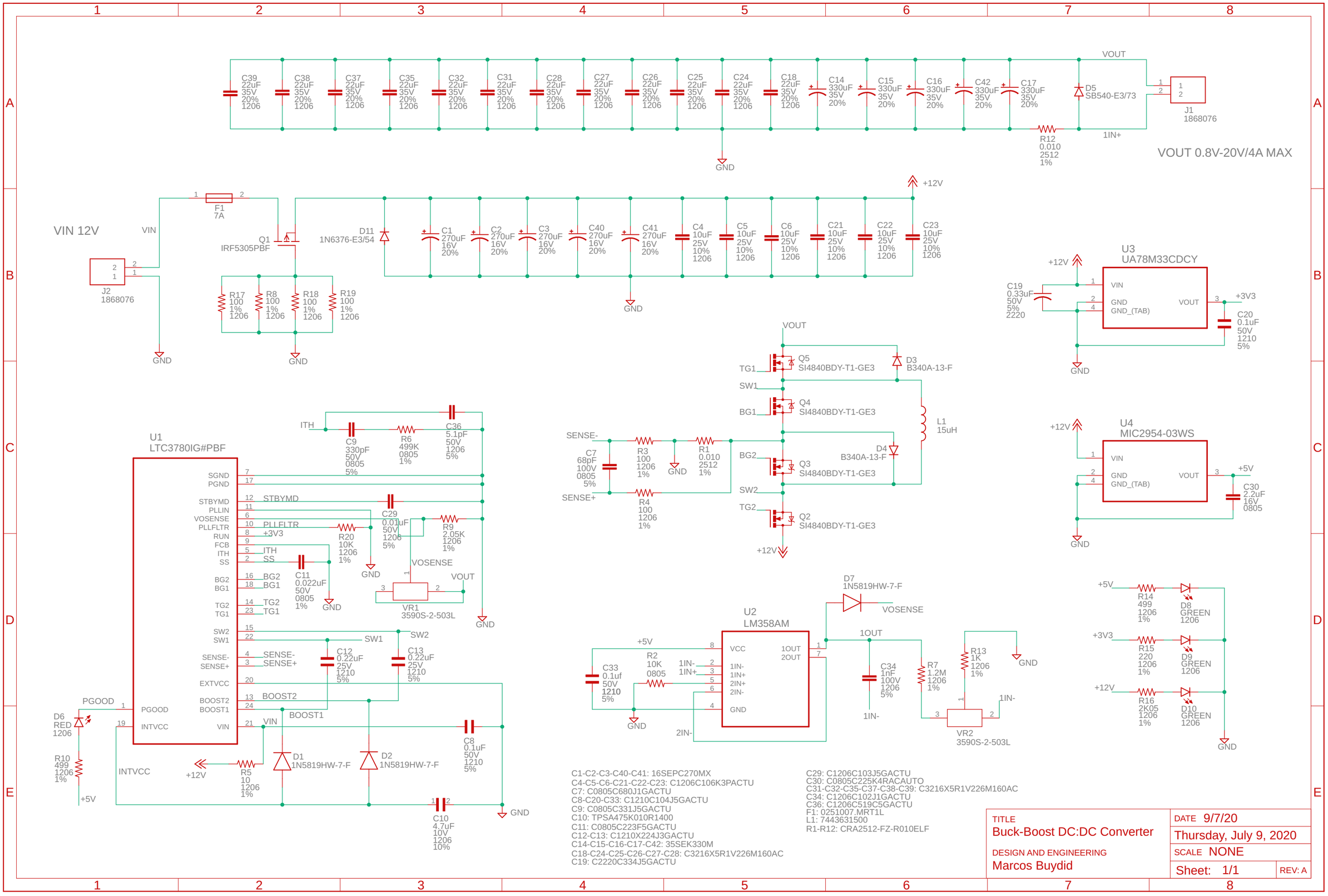
VOUT 0.8V-20V/4A MAX
VIN 12V
U1
LTC3780IG#PBF
U2
LM358AM
U3
UA78M33CDCY
U4
MIC2954-03WS
Q1
IRF5305PBF
F1
7A
J1
1868076
J2
1868076
D5
SB540-E3/73
D11
1N6376-E3/54
D7
1N5819HW-7-F
D1
1N5819HW-7-F
D2
1N5819HW-7-F
D3
B340A-13-F
D4
B340A-13-F
Q5
SI4840BDY-T1-GE3
Q4
SI4840BDY-T1-GE3
Q3
SI4840BDY-T1-GE3
Q2
SI4840BDY-T1-GE3
L1
15uH
VR1
3590S-2-503L
VR2
3590S-2-503L
D6
RED
1206
D8
GREEN
1206
D9
GREEN
1206
D10
GREEN
1206
VOUT
+12V
+3V3
+5V
GND
VIN
INTVCC
PGOOD
STBYMD
PLLFLTR
ITH
SS
BG2
BG1
TG2
TG1
SW2
SW1
SENSE-
SENSE+
BOOST2
BOOST1
VOSENSE
1IN+
1IN-
2IN-
1OUT
2OUT
C1-C2-C3-C40-C41: 16SEPC270MX
C4-C5-C6-C21-C22-C23: C1206C106K3PACTU
C7: C0805C680J1GACTU
C8-C20-C33: C1210C104J5GACTU
C9: C0805C331J5GACTU
C10: TPSA475K010R1400
C11: C0805C223F5GACTU
C12-C13: C1210X224J3GACTU
C14-C15-C16-C17-C42: 35SEK330M
C18-C24-C25-C26-C27-C28: C3216X5R1V226M160AC
C19: C2220C334J5GACTU
C29: C1206C103J5GACTU
C30: C0805C225K4RACAUTO
C31-C32-C35-C37-C38-C39: C3216X5R1V226M160AC
C34: C1206C102J1GACTU
C36: C1206C519C5GACTU
F1: 0251007.MRT1L
L1: 7443631500
R1-R12: CRA2512-FZ-R010ELF
TITLE
Buck-Boost DC:DC Converter
DESIGN AND ENGINEERING
Marcos Buydid
DATE 9/7/20
Thursday, July 9, 2020
SCALE NONE
Sheet: 1/1
REV: A