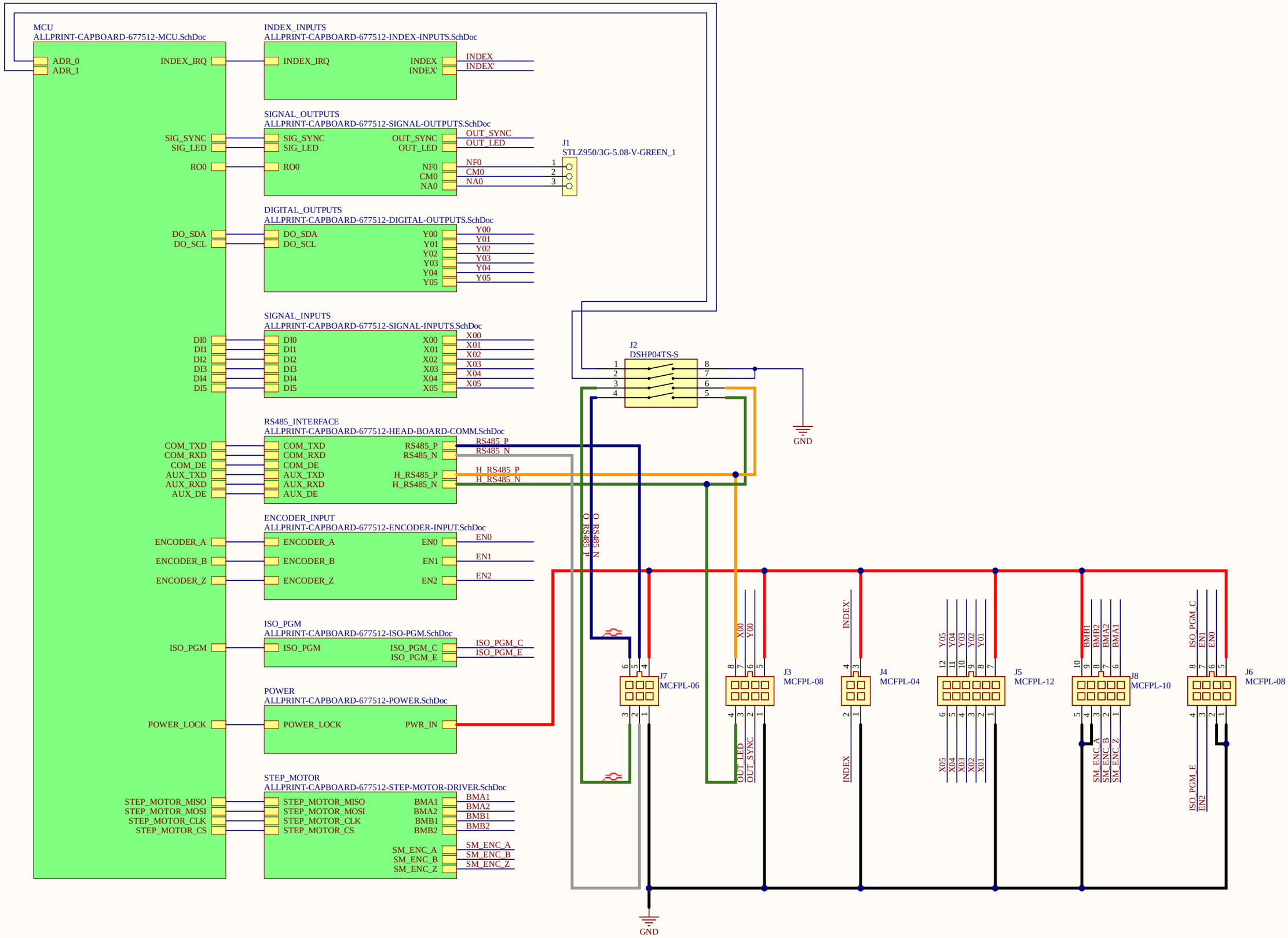

Title: **ALLPRINT-VS-CAPBOARD**			**DEXTRO LABS LTDA** São Paulo - SP - Brazil www.dextrotecnologia.com.br contact@dextrotecnologia.com.br
Size: A3	Number: 1	Revision:	
Date: 05/05/2026	Time: 01:38:27	Sheet 1 of 11	
File: C:\Users\marco\Documents\projects\dextro\ALLPRINT-CAPBOARD\ALLPRINT-CAPBOARD-677512\ALLPRINT-CAP			

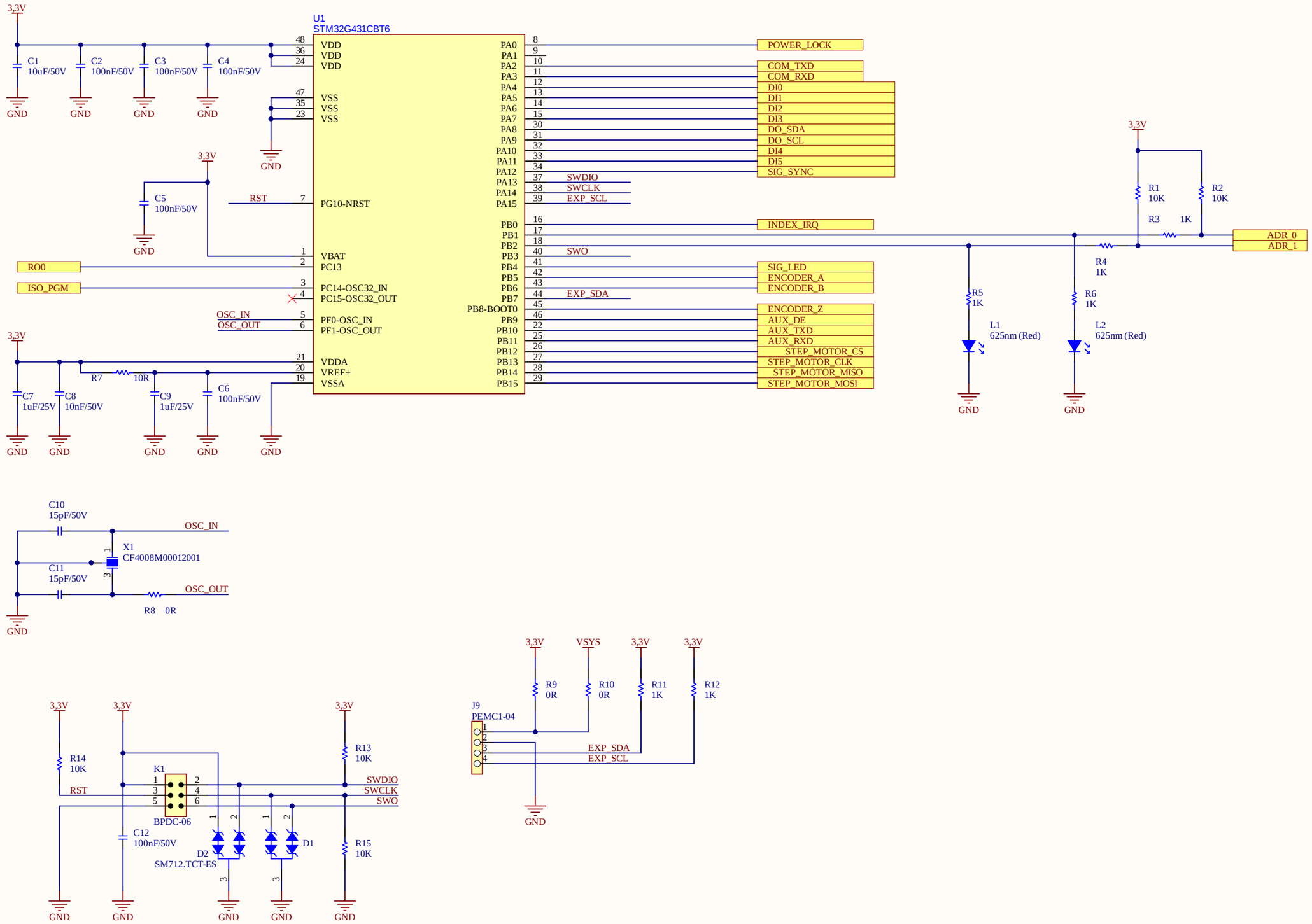

Title: *ALLPRINT-VS-CAPBOARD*			*DEXTRO LABS LTDA* *São Paulo - SP - Brazil* *www.dextrotecnologia.com.br* *contact@dextrotecnologia.com.br*
Size: A3	Number: 3	Revision:	
Date: 05/05/2026	Time: 01:38:27	Sheet 2 of 11	
File: C:\Users\marco\Documents\projects\dextro\ALLPRINT-CAPBOARD\ALLPRINT-CAPBOARD-677512\ALLPRINT-CAP			

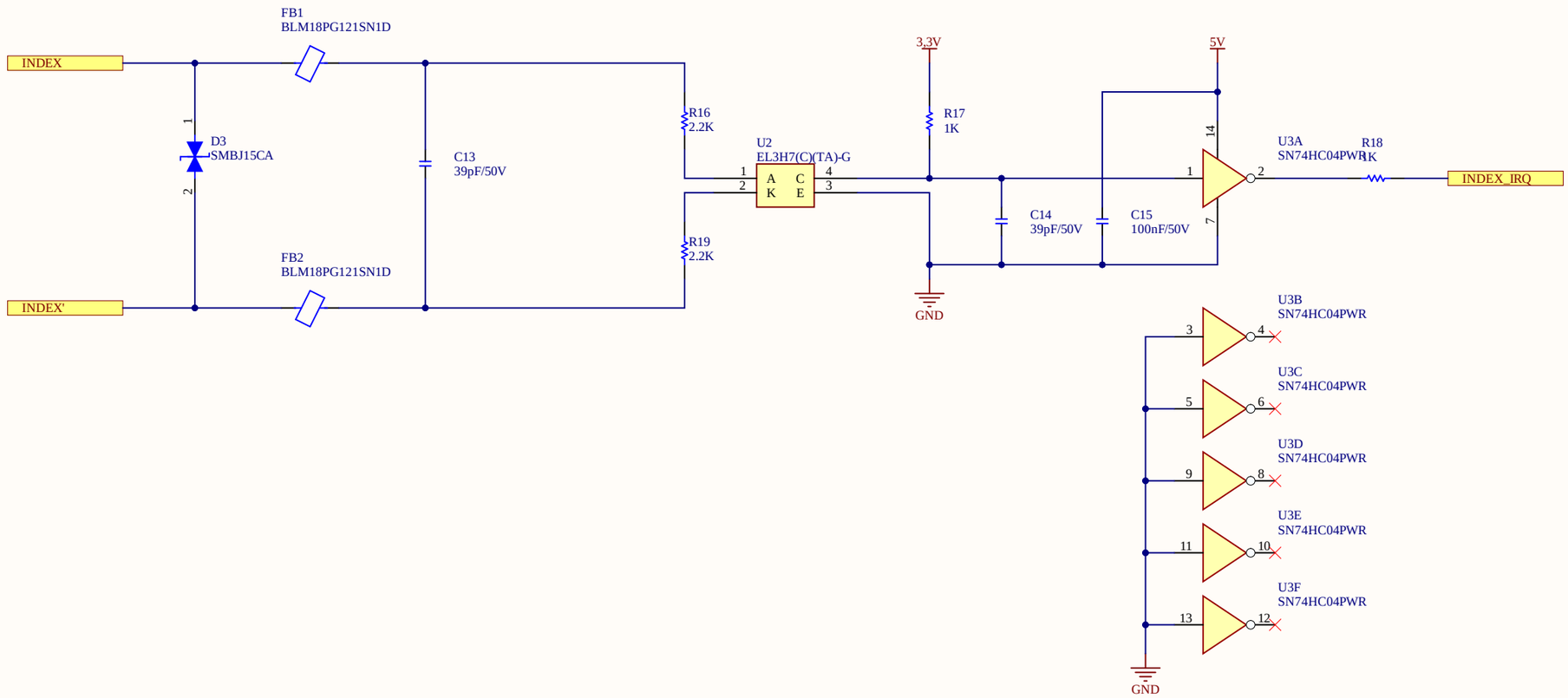

Title: ***ALLPRINT-VS-CAPBOARD***			***DEXTRO LABS LTDA*** *São Paulo - SP - Brazil* *www.dextrotecnologia.com.br* *contact@dextrotecnologia.com.br*
Size: A3	Number: 4	Revision:	
Date: 05/05/2026	Time: 01:38:27	Sheet 3 of 11	
File: C:\Users\marco\Documents\projects\dextro\ALLPRINT-CAPBOARD\ALLPRINT-CAPBOARD-677512\ALLPRINT-CAP			

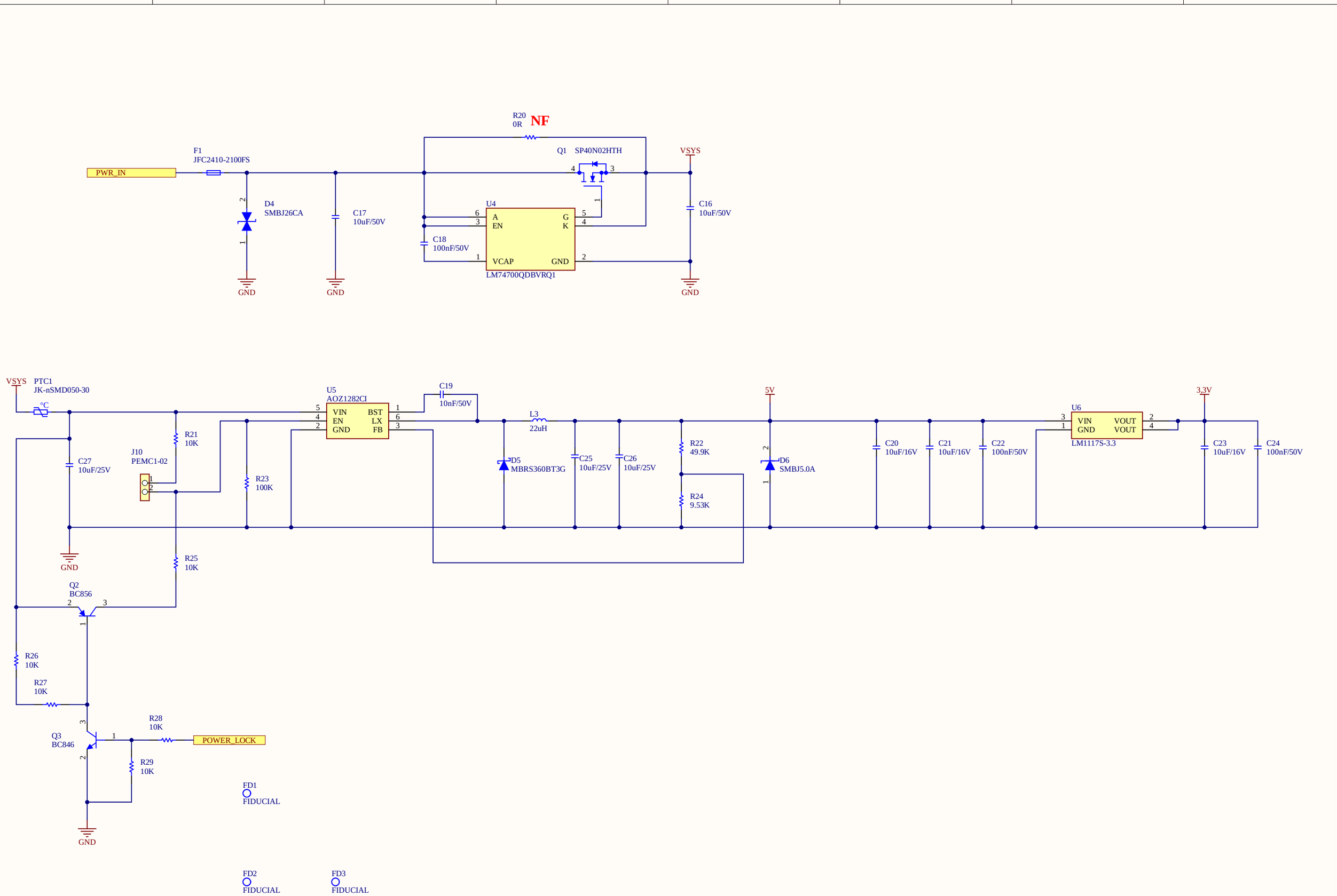

Title: *ALLPRINT-VS-CAPBOARD*			*DEXTRO LABS LTDA* *São Paulo - SP - Brazil* *www.dextrotecnologia.com.br* *contact@dextrotecnologia.com.br*
Size: A3	Number: 5	Revision:	
Date: 05/05/2026	Time: 01:38:27	Sheet 4 of 11	
File: C:\Users\marco\Documents\projects\dextro\ALLPRINT-CAPBOARD\ALLPRINT-CAPBOARD-677512\ALLPRINT-CAP			

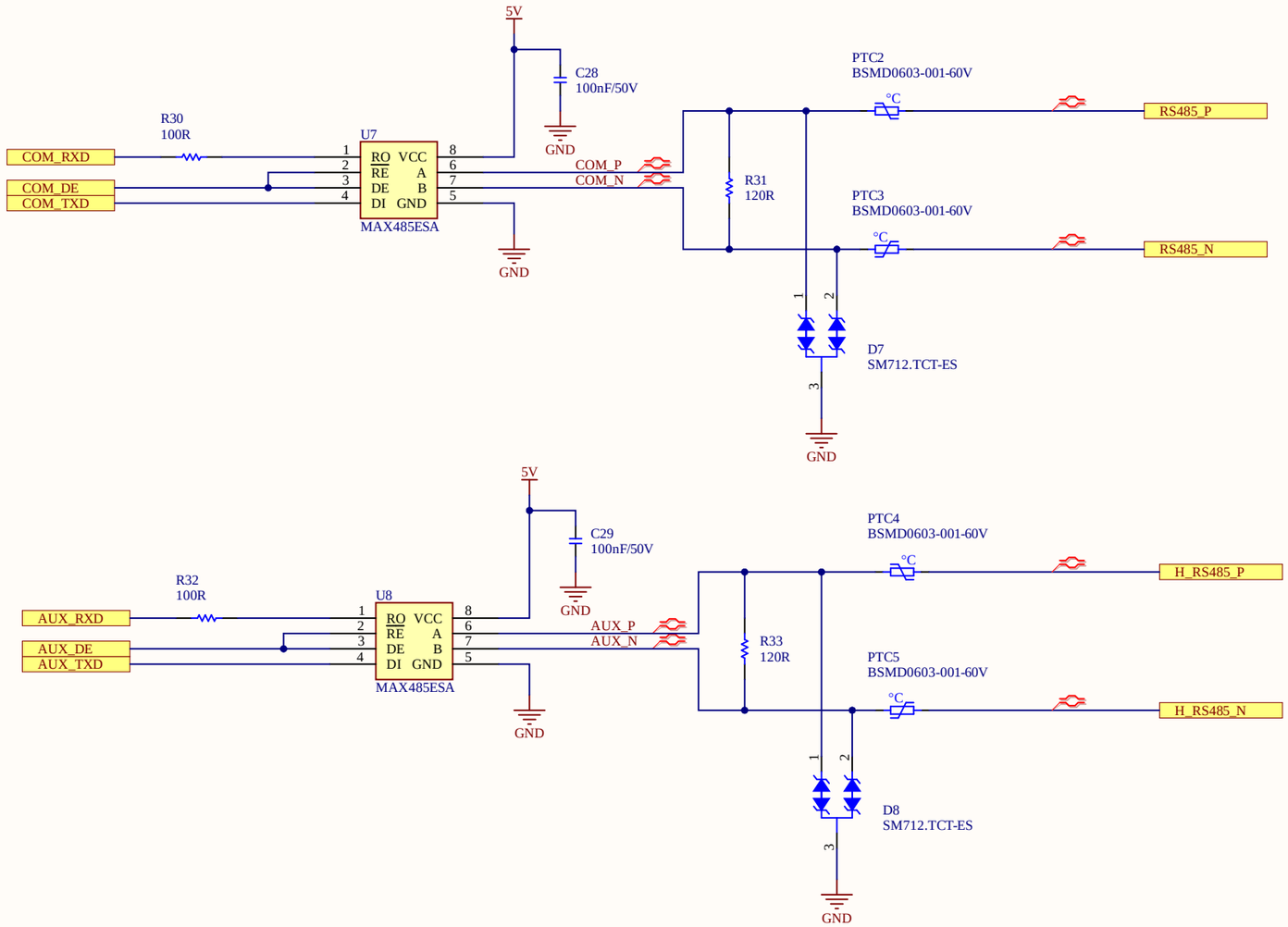

Title: ***ALLPRINT-VS-CAPBOARD***			***DEXTRO LABS LTDA*** *São Paulo - SP - Brazil* *www.dextrotecnologia.com.br* *contact@dextrotecnologia.com.br*
Size: A3	Number: 6	Revision:	
Date: 05/05/2026	Time: 01:38:27	Sheet 5 of 11	
File: C:\Users\marco\Documents\projects\dextro\ALLPRINT-CAPBOARD\ALLPRINT-CAPBOARD-677512\ALLPRINT-CAP			

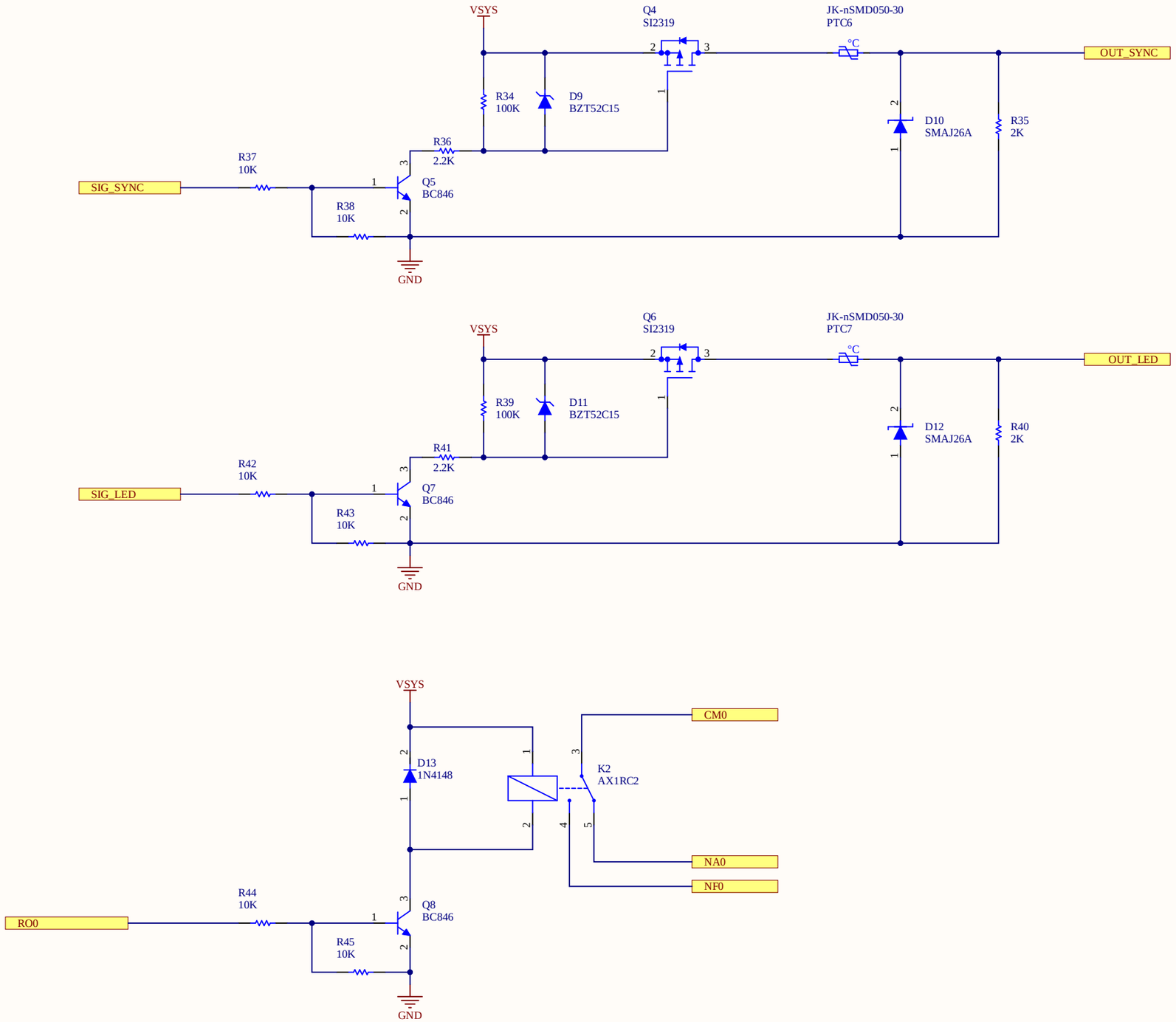

Title: ***ALLPRINT-VS-CAPBOARD***			***DEXTRO LABS LTDA*** *São Paulo - SP - Brazil* *www.dextrotecnologia.com.br* *contact@dextrotecnologia.com.br*
Size: A3	Number: 7	Revision:	
Date: 05/05/2026	Time: 01:38:27	Sheet 6 of 11	
File: C:\Users\marco\Documents\projects\dextro\ALLPRINT-CAPBOARD\ALLPRINT-CAPBOARD-677512\ALLPRINT-CAP			

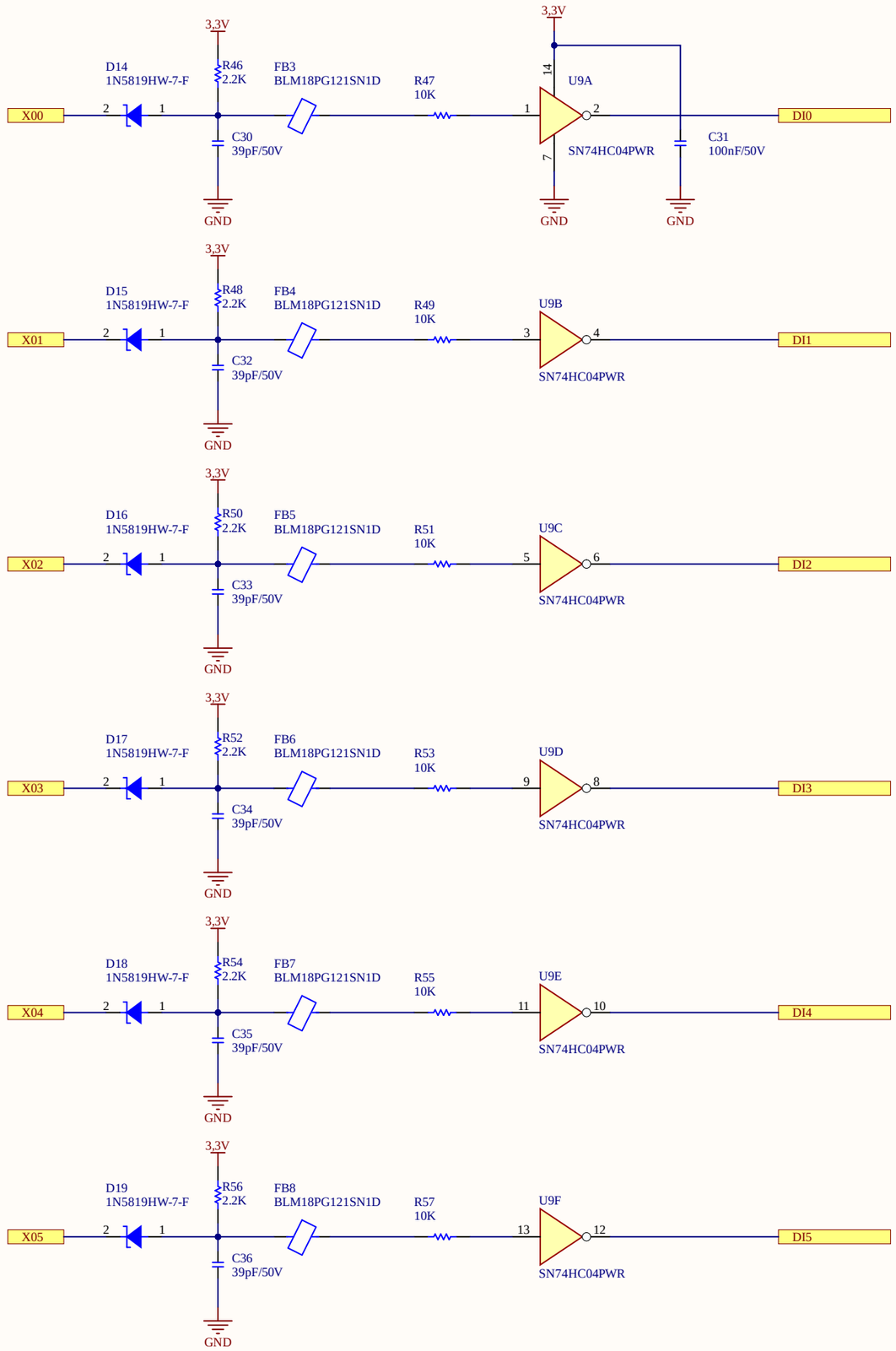

Title: *ALLPRINT-VS-CAPBOARD*			*DEXTRO LABS LTDA* *São Paulo - SP - Brazil* *www.dextrotecnologia.com.br* *contact@dextrotecnologia.com.br*
Size: A3	Number: 8	Revision:	
Date: 05/05/2026	Time: 01:38:28	Sheet 7 of 11	
File: C:\Users\marco\Documents\projects\dextro\ALLPRINT-CAPBOARD\ALLPRINT-CAPBOARD-677512\ALLPRINT-CAP			

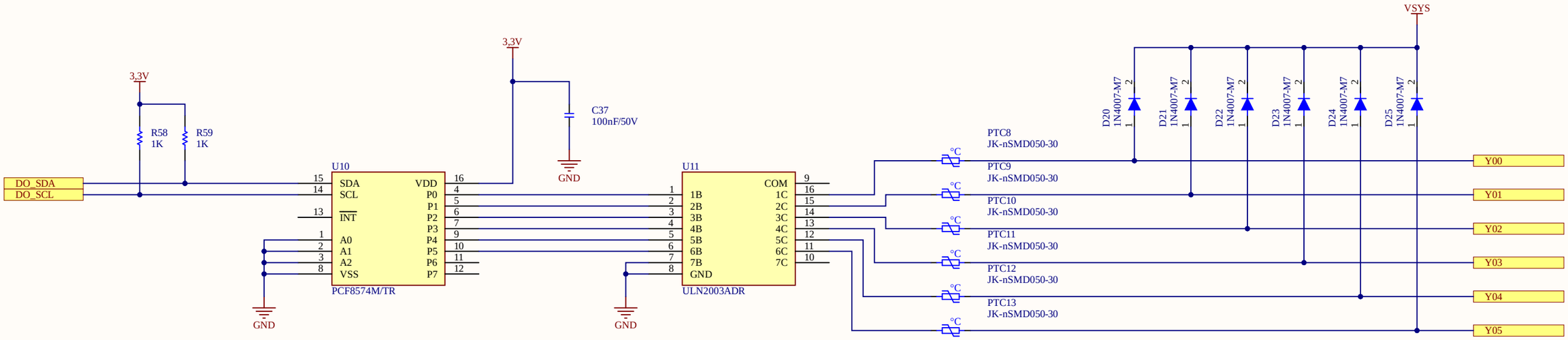

Title: ***ALLPRINT-VS-CAPBOARD***			***DEXTRO LABS LTDA*** *São Paulo - SP - Brazil* *www.dextrotecnologia.com.br* *contact@dextrotecnologia.com.br*
Size: A3	Number: 10	Revision:	
Date: 05/05/2026	Time: 01:38:28	Sheet 8 of 11	
File: C:\Users\marco\Documents\projects\dextro\ALLPRINT-CAPBOARD\ALLPRINT-CAPBOARD-677512\ALLPRINT-CAP			

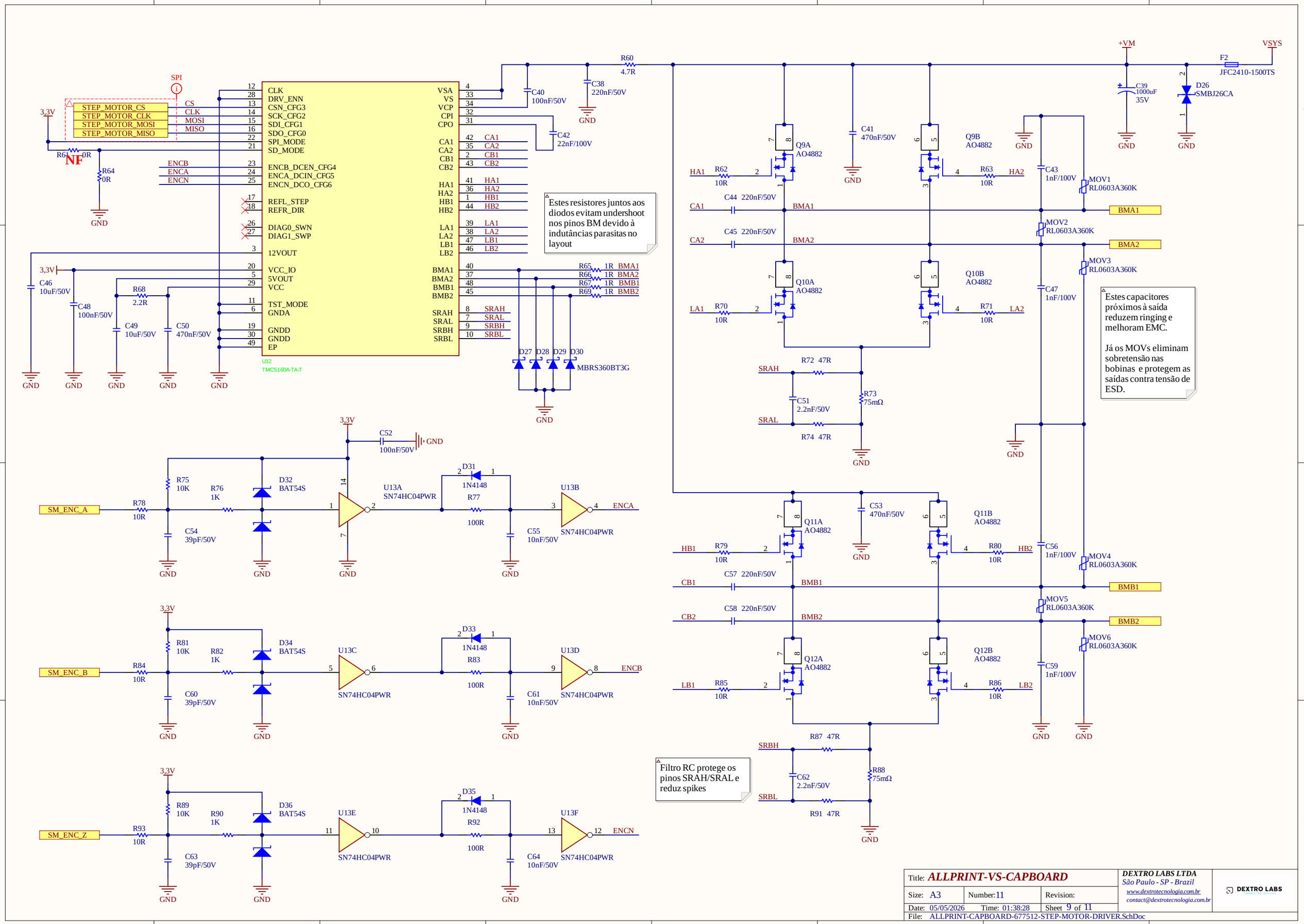

Title: ***ALLPRINT-VS-CAPBOARD***			***DEXTRO LABS LTDA*** *São Paulo - SP - Brazil* *www.dextrotecnologia.com.br* *contact@dextrotecnologia.com.br*
Size: A3	Number: 11	Revision:	
Date: 05/05/2026	Time: 01:38:28	Sheet 9 of 11	
File: ALLPRINT-CAPBOARD-677512-STEP-MOTOR-DRIVER.SchDoc			

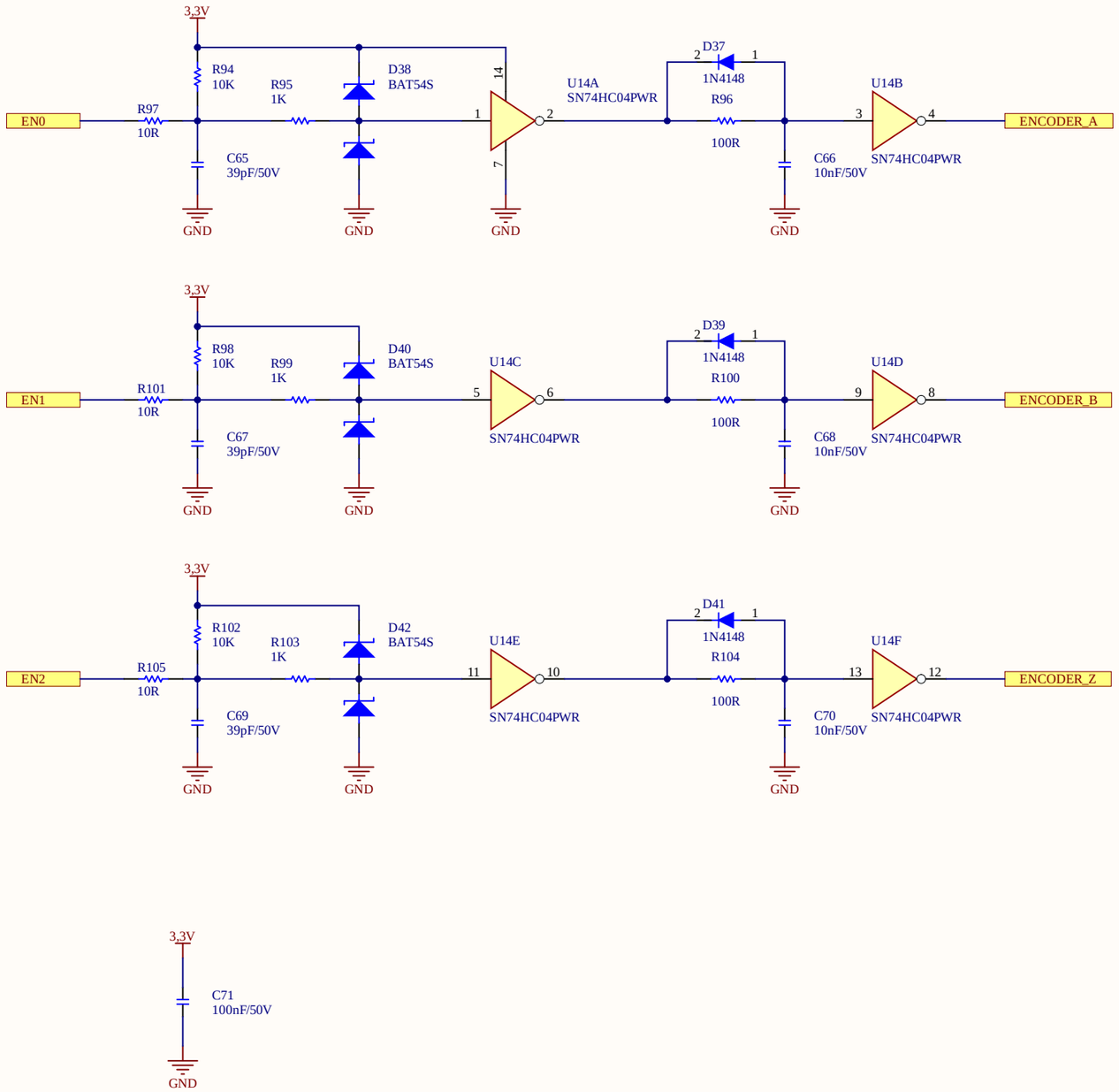

Title: ***ALLPRINT-VS-CAPBOARD***			***DEXTRO LABS LTDA*** *São Paulo - SP - Brazil* *www.dextrotecnologia.com.br* *contact@dextrotecnologia.com.br*
Size: A3	Number: 12	Revision:	
Date: 05/05/2026	Time: 01:38:28	Sheet 10 of 11	
File: C:\Users\marco\Documents\projects\dextro\ALLPRINT-CAPBOARD\ALLPRINT-CAPBOARD-677512\ALLPRINT-CAP			

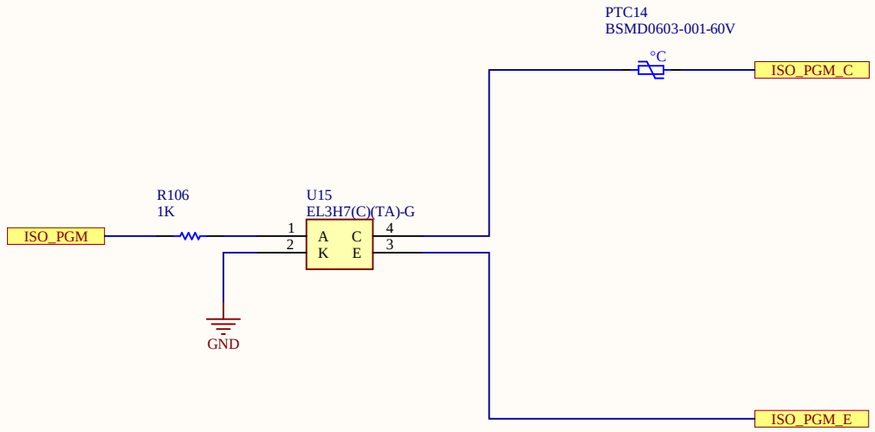

Title: ***ALLPRINT-VS-CAPBOARD***			***DEXTRO LABS LTDA*** *São Paulo - SP - Brazil* *www.dextrotecnologia.com.br* *contact@dextrotecnologia.com.br*
Size: A3	Number: 13	Revision:	
Date: 05/05/2026	Time: 01:38:28	Sheet 11 of 11	
File: C:\Users\marco\Documents\projects\dextro\ALLPRINT-CAPBOARD\ALLPRINT-CAPBOARD-677512\ALLPRINT-CAP			