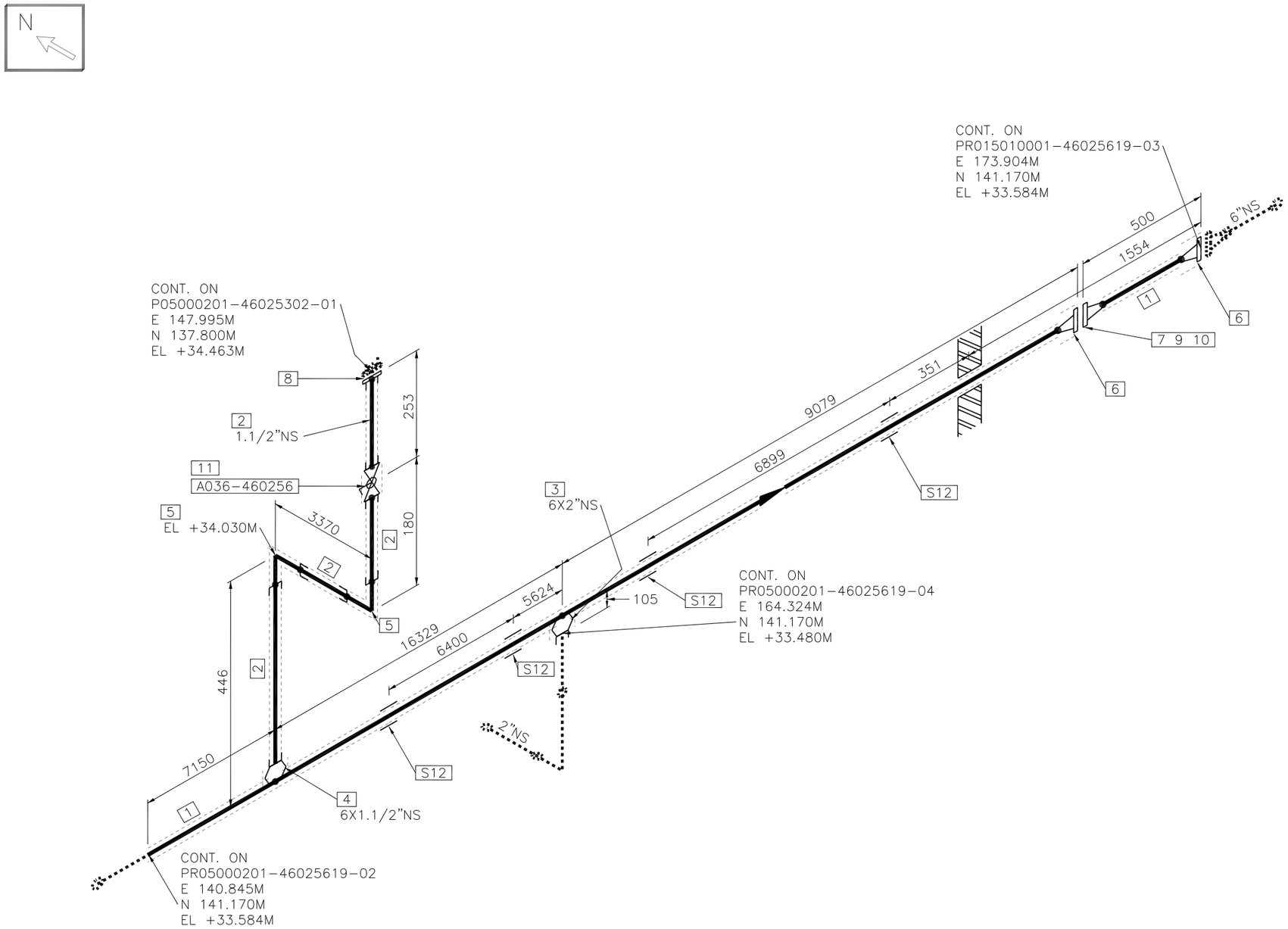

FOR ISOMETRIC NOTES PLEASE REFER TO PM DOCUMENT IE0312206-43-LI-0003

CONTRACT:	MEP2	ISSUE							
ISO CATEGORY:	CATEGORY 1	ISSUE							
SYSTEM NO.		ISSUE							
STRESS ANALYSIS	TYPE 1 EXEMPT PIPING	ISSUE							
PED CAT.	SEE PROCESS LINE LIST	ISSUE		0	ISSUE FOR CONSTRUCTION	WM	DB	PS	27 NOV 2018
P + ID	SEE PROCESS LINE LIST	ISSUE		ISSUE	DESCRIPTION	ORIG	CHK'D	PM APP	DATE

MATERIALS TAKE OFF

No.	QTY.	SIZE	DESCRIPTION	SPEC
1	32.8 M	6	PIPE CS, SMLS OR WELDED, SCH 40, ASTM A53	SP-8C
2	4.0 M	1.1/2	PIPE CS, SMLS, SCH 80, ASTM A53	SP-8C
3	1	6X2	SOCKOLET, CS, SCH 80, ASTM A53	SP-8C
4	1	6X1.1/2	SOCKOLET, CS, SCH 80, ASTM A53	SP-8C
5	2	1.1/2	90 ELL, SW, 3000LB, FORGED CS	SP-8C
6	2	6	FLG WN, 150LB FF, FORGED CS, ASTM A105	SP-8C
7	1	6	FLG WN, 150LB RF, FORGED CS, ASTM A105	SP-8C
8	1	1.1/2	FLG SW, 150LB RF, FORGED CS, ASTM A105	SP-8C
9	1	6	GASKET, 150LB, 1/8" THK, PTFE WITH BARIUM SULFATE FILLER, GARLOCK	SP-8C
			GYLON STYLE 3510	
10	1	3/4	(8) MACHINE BOLTS, CS HEAVY HEX W/ A563 GR. A HEAVY HEX NUTS	SP-8C
			NUTS, 101.6 LG	
11	1	1.1/2	BALL VALVE, SW, B-1505SE, CS	SP-8C
12	4	6	PIPE SUPPORT, SX-06	SP-8C

PM GROUP

MSD Animal Health

CLIENT	MSD BOXMEER
PROJECT	STERILE FILLING FREEZE DRYING & CUB
LINE No.	6-WCVR-PE005-46025619-SP8C-N-HC
PROJECT No. IE0312206	DRAWING No. PR05000201-46025619-01
CLIENT REF. PE005.001	REV 0