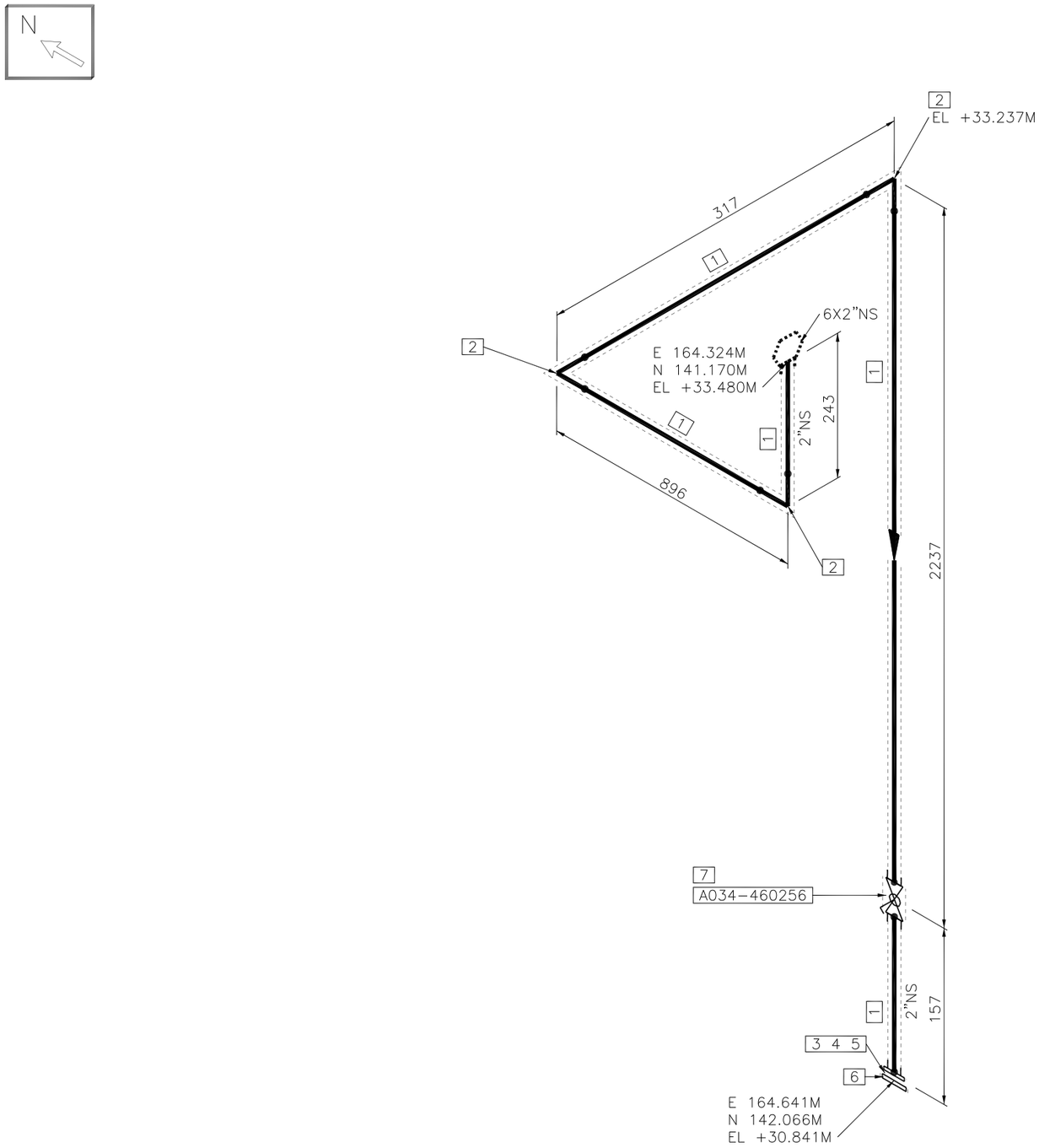

FOR ISOMETRIC NOTES PLEASE REFER TO PM DOCUMENT IE0312206-43-LI-0003

CONTRACT:	MEP2	ISSUE							
ISO CATEGORY:	CATEGORY 1	ISSUE							
SYSTEM NO.		ISSUE							
STRESS ANALYSIS	TYPE 1 EXEMPT PIPING	ISSUE							
PED CAT.	SEE PROCESS LINE LIST	ISSUE		0	ISSUE FOR CONSTRUCTION	WM	DB	PS	27 NOV 2018
P + ID	SEE PROCESS LINE LIST	ISSUE		ISSUE	DESCRIPTION	ORIG	CHK'D	PM APP	DATE

MATERIALS TAKE OFF

No.	QTY.	SIZE	DESCRIPTION	SPEC
1	3.3 M	2	PIPE CS, SMLS, SCH 80, ASTM A53	SP-8C
2	3	2	90 ELL. BW, WROUGHT CS, SMLS OR WELDED, SCH 40, ASTM A234	SP-8C
3	1	2	FLG SW, 150LB RF, FORGED CS, ASTM A105	SP-8C
4	1	2	GASKET, 150LB, 1/8" THK, PTFE WITH BARIUM SULFATE FILLER, GARLOCK	SP-8C
			GYLON STYLE 3510	
5	1	5/8	(4) MACHINE BOLTS, CS HEAVY HEX W/ A563 GR. A HEAVY HEX NUTS	SP-8C
			NUTS, 82.6 LG	
6	1	2	FLG BLIND, 150LB RF, FORGED CS, ASTM A105	SP-8C
7	1	2	BALL VALVE, SW, B-1505SE, CS	SP-8C

PM GROUP

MSD Animal Health

CLIENT	MSD BOXMEER
PROJECT	STERILE FILLING FREEZE DRYING & CUB
LINE No.	6-WCVR-PE005-46025619-SP8C-N-HC
PROJECT No. IE0312206	DRAWING No. PR05000201-46025619-04
CLIENT REF. PE005.001	REV 0