Safety is a primary requirement when working on and off site, the Mechanical Contractor is required to carefully read and understand all safety requirements as a high level safety participation is mandatory.

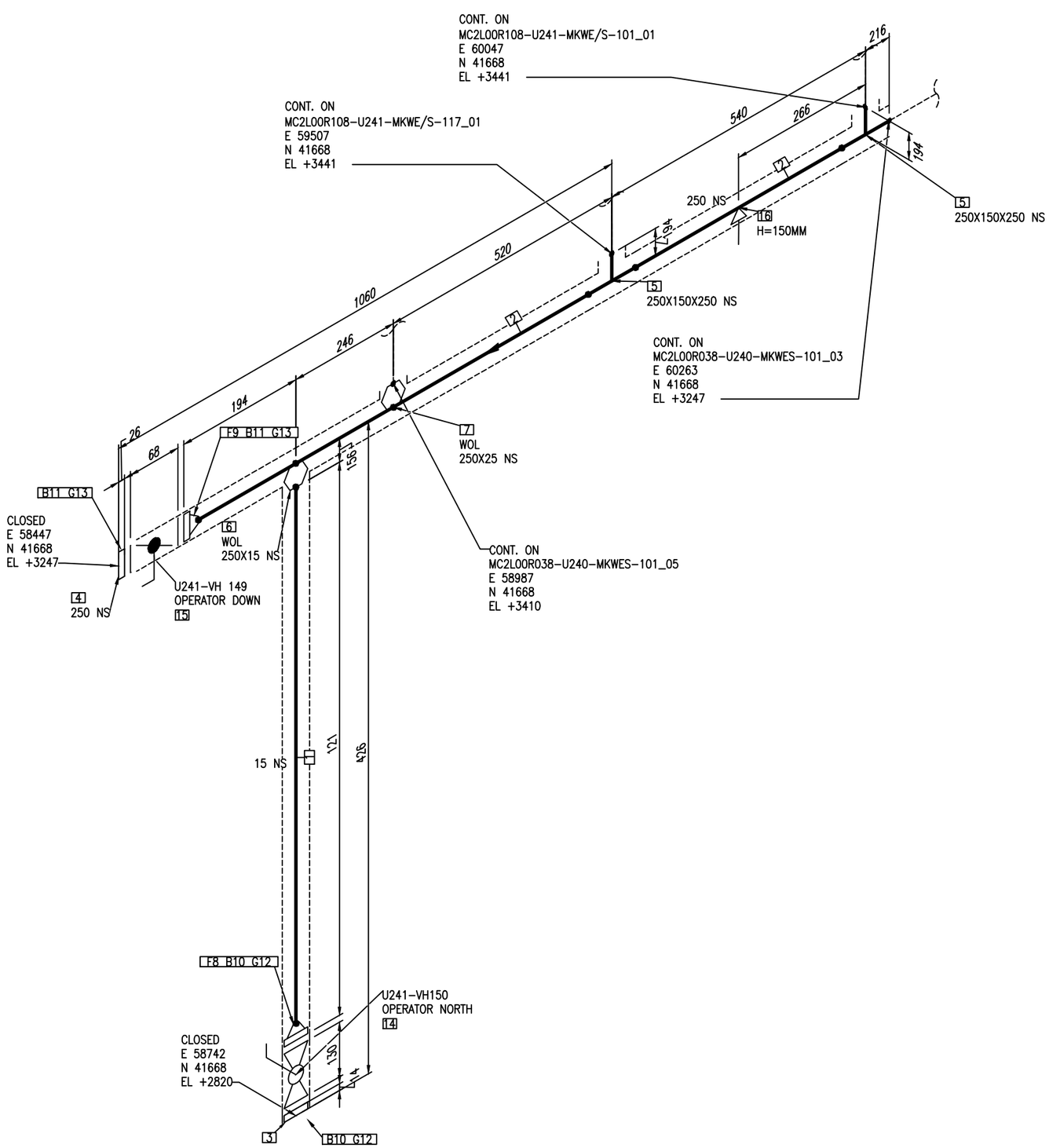

BILL OF MATERIALS

PIPE

ID	DESCRIPTION	SPEC	INSUL	ND	QTY
1	PIPE, EN ISO 1127	LH001	K51	15	0.1M
2	PIPE, EN ISO 1127	LH001	K51	250	0.8M

FITTINGS

ID	DESCRIPTION	SPEC	INSUL	ND	QTY
3	BLIND FLANGE, PN10, EN1092-1 TYPE 05	LH001	K51	15	1
4	230HF3 BLIND FLANGE, PN10, EN1092-1 TYPE 05	LH001	K51	250	1
5	PIPE T-PIECE WITH REDUCING BRANCH, TYPE A W, DIN EN 10253-2	LH001	K51	250X150X250	2

OLETS

ID	DESCRIPTION	SPEC	INSUL	ND	QTY
~~6~~	~~WELDOLET, BW~~	~~LH001~~	~~K51~~	~~250X15~~	~~1~~
~~7~~	~~WELDOLET, BW~~	~~LH001~~	~~K51~~	~~250X25~~	~~1~~

FLANGES

ID	DESCRIPTION	SPEC	INSUL	ND	QTY
8	WELD NECK FLANGE, PN10, EN1092-1 TYPE 11	LH001	K51	15	1
9	WELD NECK FLANGE, PN10, EN1092-1 TYPE 11	LH001	K51	250	1

FASTENERS

ID	DESCRIPTION	SPEC	INSUL	ND	QTY
10	BOLT SET	LH001	K51	15	2
11	280BB.56 & 282BB.56 BOLT SET, LUG	LH001	K51	250	2
12	GASKET, 3MM THICK	LH001	K51	15	2
~~13~~	~~270AF GASKET, 3MM THICK~~	~~LH001~~	~~K51~~	~~250~~	~~2~~

VALVES

ID	DESCRIPTION	SPEC	INSUL	ND	QTY
14	9HA BALL VALVE, FL, PN16	LH001	K51	15	1
15	10BX BUTTERFLY VALVE, LUG, PN10	LH001	K51	250	1

PIPE SUPPORTS

ID	DESCRIPTION		SPEC	INSUL	ND	QTY
16	PIPE SUPPORT PS61-04/LK	H=150MM	LH001	K51	250	1

[1] DENOTES PIPE SPOOL NO
[1] DENOTES PARTS LIST NO

SHOP WELD | FIELD WELD | SOCKET WELD | SCREWED JOINT | COMPN JOINT | PIPE SUPPORT | LAGGED PIPE | TRACED PIPE

REV	DESCRIPTION	DATE	PIPING	STRESS
0	ISSUED FOR CONSTRUCTION	10-DEC-2021	CB	DD

APPROVALS

NOTES:
1. MECHANICAL CONTRACTOR TO ENSURE ALL PIPEWORK IS ADEQUATELY SUPPORTED.
2. CLOSURE SPOOLS TO BE VERIFIED ON SITE PRIOR TO FABRICATION.
3. ALL WELDS AND JOINTS TO BE CLEAR OF SUPPORT STEELWORK.
4. PIPE SPOOLS AT FFW LOCATIONS TO BE SITE MEASURED PRIOR TO FABRICATION.
5. ALL DIAPHRAGM VALVES ARE TO BE ROTATED TO MANUFACTURERS SPECIFIED DRAIN ANGLES.
6. INSULATION LIMITS FOR PERSONAL PROTECTION TYPE INSULATION WILL BE DETERMINED ON SITE.
7. CONTRACTOR TO LOCATE ALL HIGH POINT VENTS AND LOW POINT DRAINS.
8. CONTRACTOR TO VERIFY EQUIPMENT & INSTRUMENTATION CONNECTIONS AND LOCATIONS PRIOR TO FINAL FABRICATION. & MAKE RELEVANT ADJUSTMENTS TO SUIT.

Jacobs
http://www.jacobs.com/
Mahon Industrial Estate, Blackrock, Cork, Ireland. Tel.: +353 (0)21 4515777 Fax: +353 (0)21 4358977
Merrion House, Merrion Road, Dublin 4, Ireland. Tel.: +353 (0)1 2695666 Fax: +353 (0)1 2695706

CLIENT NAME:	LONZA	JE PROJECT NO:	41AAA4000
PROJECT LOCATION.:	VISP	STRESS CRITICAL:	REF. LINE LIST
PROJECT DESC.:	ORCA	PED CAT:	REF. LINE LIST

DRG.SIZE: A2

DRAWING NO: MC2L00R038-U240-MKWES-101_04

REV. 0

Safety is a primary requirement when working on and off site, the Mechanical Contractor is required to carefully read and understand all safety requirements as a high level safety participation is mandatory.