Safety is a primary requirement when working on and off site, the Mechanical Contractor is required to carefully read and understand all safety requirements as a high level safety participation is mandatory.

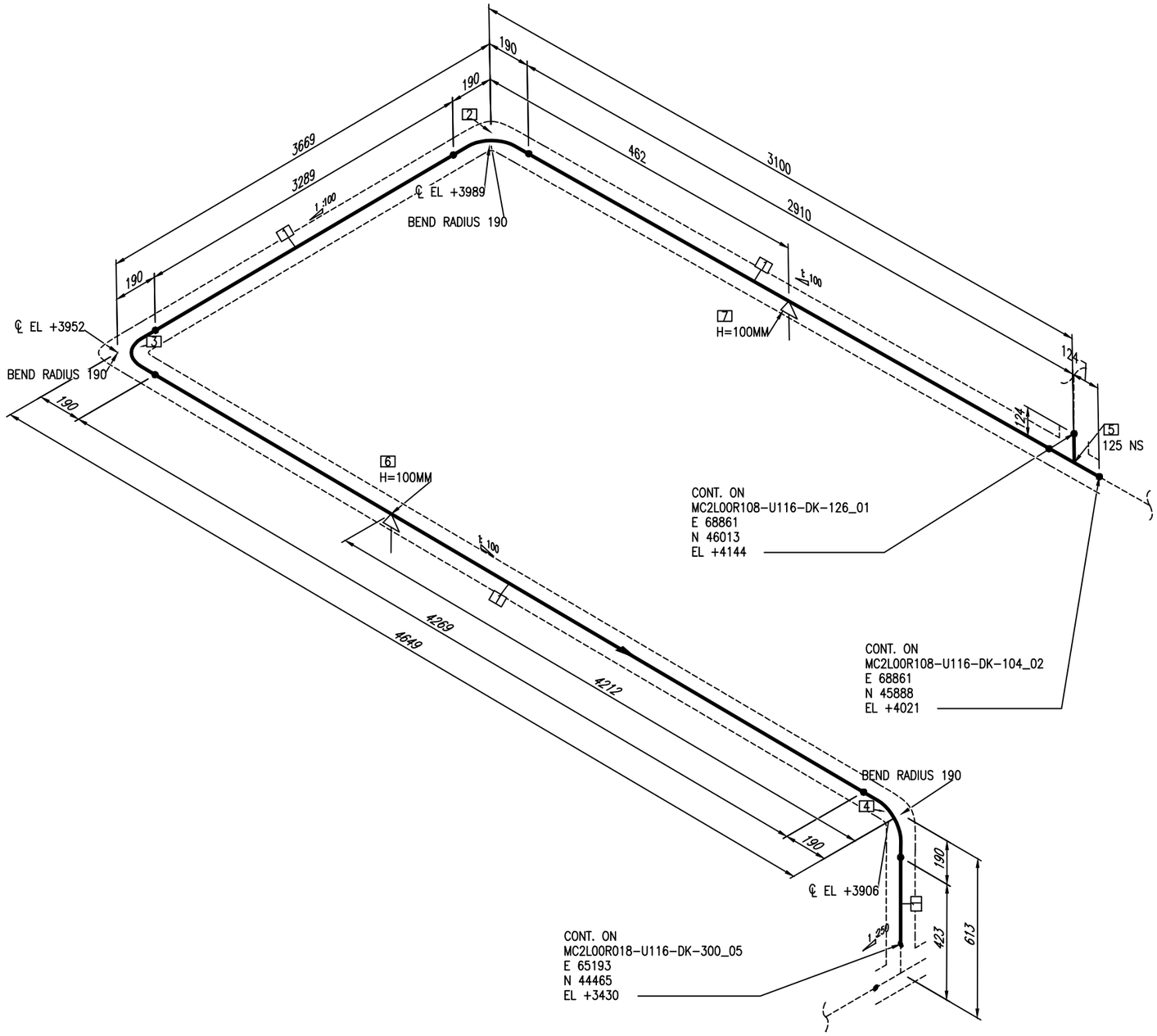

BILL OF MATERIALS

PIPE

ID	DESCRIPTION	SPEC	INSUL	ND	QTY
1	100HF TUBE, EN ISO 1127	LH011	W23	125	10.7M

FITTINGS

ID	DESCRIPTION	SPEC	INSUL	ND	QTY
2	110HF PIPE BEND 90, TYPE 3D, DIN EN 10253-4	LH011	W23	125	1
3	110HF PIPE BEND 90, TYPE 3D, DIN EN 10253-4	LH011	W23	125	1
4	110HF PIPE BEND 90, TYPE 3D, DIN EN 10253-4	LH011	W23	125	1
5	163HF PIPE T-PIECE WITH SAME BRANCH, DIN EN 10253-4, SERIES 3	LH011	W23	125	1

PIPE SUPPORTS

ID	DESCRIPTION		SPEC	INSUL	ND	QTY
6	PIPE SUPPORT PS40-01/LC	H=100MM	LH011	W23	125	1
7	PIPE SUPPORT PS40-04/LC	H=100MM	LH011	W23	125	1

[1] DENOTES PIPE SPOOL NO
[1] DENOTES PARTS LIST NO

SHOP WELD | FIELD WELD | SOCKET WELD | SCREWED JOINT | COMPN JOINT | PIPE SUPPORT | LAGGED PIPE | TRACED PIPE

If line is Stress Critical then no Modifications without prior agreement.

REV	DESCRIPTION	DATE	PIPING	STRESS
0	ISSUED FOR CONSTRUCTION	04-FEB-2022	CB	DD

APPROVALS

NOTES:
1. MECHANICAL CONTRACTOR TO ENSURE ALL PIPEWORK IS ADEQUATELY SUPPORTED.
2. CLOSURE SPOOLS TO BE VERIFIED ON SITE PRIOR TO FABRICATION.
3. ALL WELDS AND JOINTS TO BE CLEAR OF SUPPORT STEELWORK.
4. PIPE SPOOLS AT FFW LOCATIONS TO BE SITE MEASURED PRIOR TO FABRICATION.
5. ALL DIAPHRAGM VALVES ARE TO BE ROTATED TO MANUFACTURERS SPECIFIED DRAIN ANGLES.
6. INSULATION LIMITS FOR PERSONAL PROTECTION TYPE INSULATION WILL BE DETERMINED ON SITE.
7. CONTRACTOR TO LOCATE ALL HIGH POINT VENTS AND LOW POINT DRAINS.
8. CONTRACTOR TO VERIFY EQUIPMENT & INSTRUMENTATION CONNECTIONS AND LOCATIONS PRIOR TO FINAL FABRICATION. & MAKE RELEVANT ADJUSTMENTS TO SUIT.

Jacobs
http://www.jacobs.com/
Mahon Industrial Estate, Blackrock, Cork, Ireland. Tel.: +353 (0)21 4515777 Fax: +353 (0)21 4358977
Merrion House, Merrion Road, Dublin 4, Ireland. Tel.: +353 (0)1 2695666 Fax: +353 (0)1 2695706

CLIENT NAME:	LONZA	JE PROJECT NO:	41AAA4000
PROJECT LOCATION.:	VISP	STRESS CRITICAL:	REF. LINE LIST
PROJECT DESC.:	ORCA	PED CAT:	REF. LINE LIST

DRAWING NO: MC2L00R108-U116-DK-104_01

DRG.SIZE: A2

REV.: 0

Safety is a primary requirement when working on and off site, the Mechanical Contractor is required to carefully read and understand all safety requirements as a high level safety participation is mandatory.