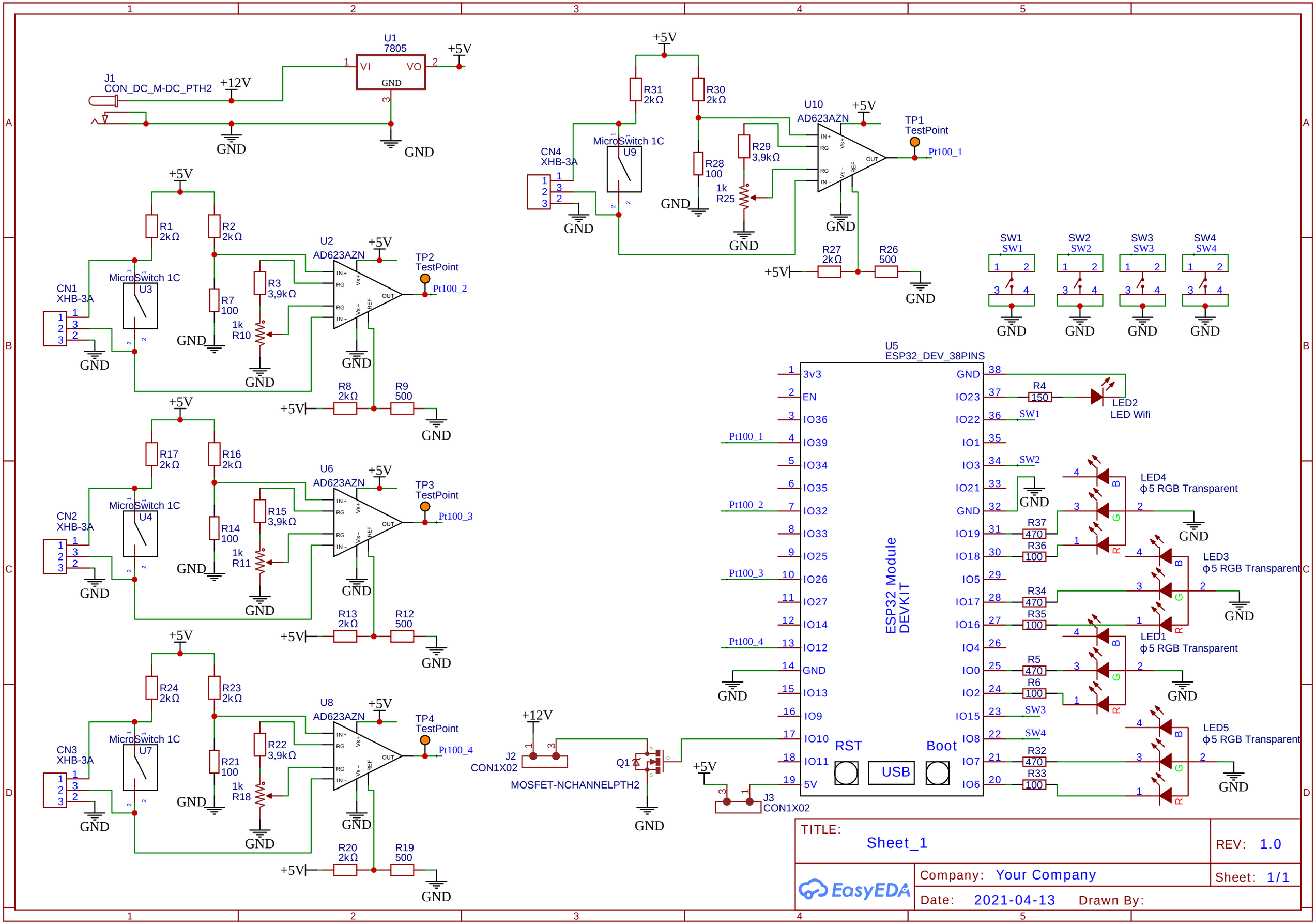
U1
7805
VI
VO
GND
+5V
J1
CON_DC_M-DC_PTH2
+12V
GND
U10
AD623AZN
TP1
TestPoint
Pt100_1
CN4
XHB-3A
MicroSwitch 1C
U9
R31
2kΩ
R30
2kΩ
R28
100
R29
3,9kΩ
1k
R25
R27
2kΩ
R26
500
SW1
SW2
SW3
SW4
U2
AD623AZN
TP2
TestPoint
Pt100_2
CN1
XHB-3A
U3
R1
2kΩ
R2
2kΩ
R7
100
R3
3,9kΩ
1k
R10
R8
2kΩ
R9
500
U6
AD623AZN
TP3
TestPoint
Pt100_3
CN2
XHB-3A
U4
R17
2kΩ
R16
2kΩ
R14
100
R15
3,9kΩ
1k
R11
R13
2kΩ
R12
500
U8
AD623AZN
TP4
TestPoint
Pt100_4
CN3
XHB-3A
U7
R24
2kΩ
R23
2kΩ
R21
100
R22
3,9kΩ
1k
R18
R20
2kΩ
R19
500
U5
ESP32_DEV_38PINS
ESP32 Module
DEVKIT
3v3
EN
IO36
IO39
IO34
IO35
IO32
IO33
IO25
IO26
IO27
IO14
IO12
GND
IO13
IO9
IO10
IO11
5V
GND
IO23
IO22
IO1
IO3
IO21
GND
IO19
IO18
IO5
IO17
IO16
IO4
IO0
IO2
IO15
IO8
IO7
IO6
RST
USB
Boot
R4
150
LED2
LED Wifi
R37
470
R36
100
LED4
ϕ5 RGB Transparent
R34
470
R35
100
LED3
ϕ5 RGB Transparent
R5
470
R6
100
LED1
ϕ5 RGB Transparent
R32
470
R33
100
LED5
ϕ5 RGB Transparent
J2
CON1X02
Q1
MOSFET-NCHANNELPTH2
J3
CON1X02
TITLE:
Sheet_1
REV: 1.0
Company: Your Company
Sheet: 1/1
Date: 2021-04-13
Drawn By:
EasyEDA