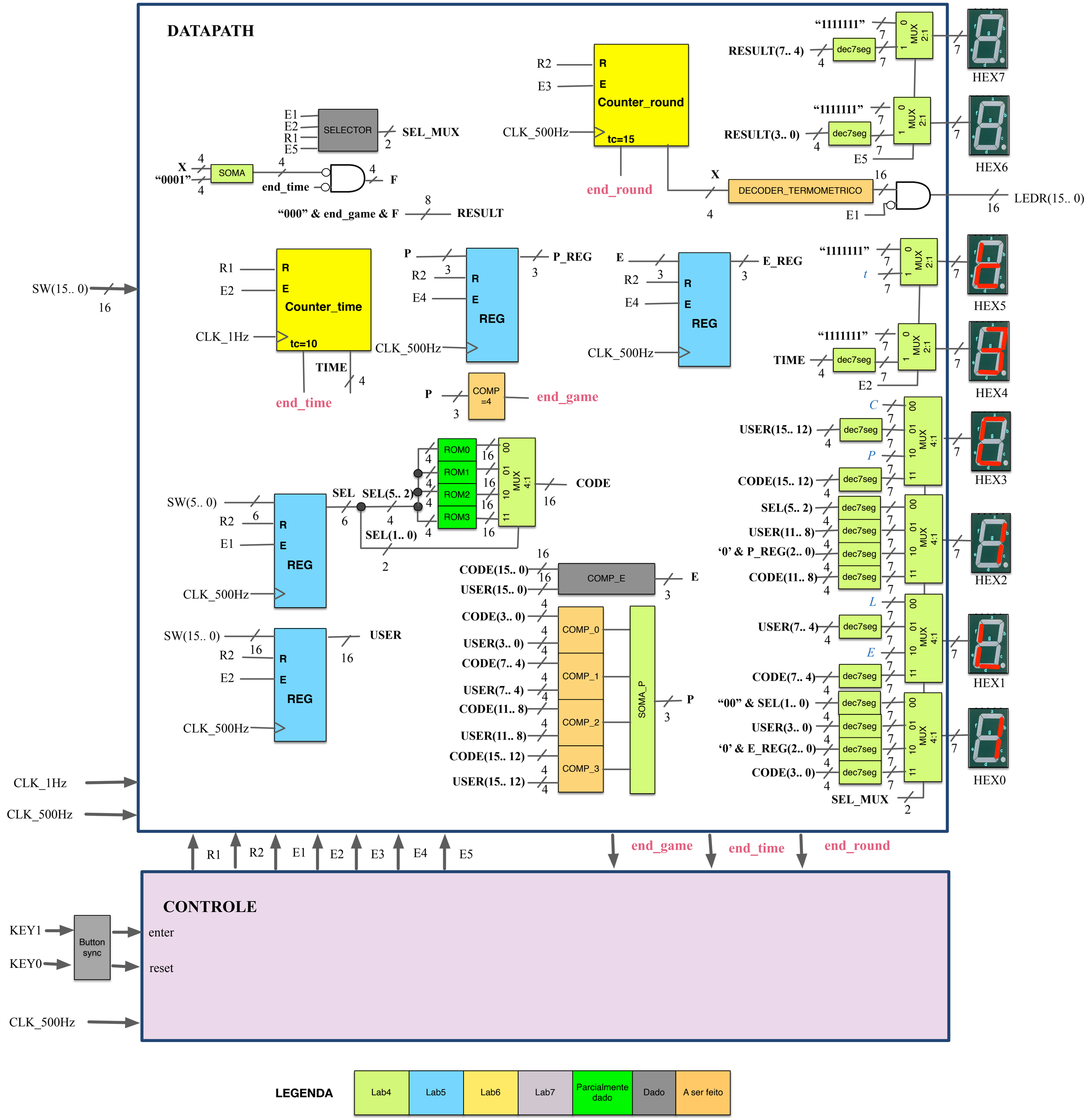
DATAPATH
SW(15.. 0)
16
CLK_1Hz
CLK_500Hz
R1
E2
Counter_time
tc=10
TIME
end_time
R2
E3
Counter_round
tc=15
end_round
E1
E2
R1
E5
SELECTOR
SEL_MUX
X
"0001"
SOMA
end_time
F
"000" & end_game & F
RESULT
P
R2
E4
REG
P_REG
P
COMP =4
end_game
E
R2
E4
REG
E_REG
SW(5.. 0)
R2
E1
REG
SEL
SEL(5.. 2)
SEL(1.. 0)
ROM0
ROM1
ROM2
ROM3
MUX 4:1
CODE
SW(15.. 0)
R2
E2
REG
USER
CODE(15.. 0)
USER(15.. 0)
COMP_E
E
CODE(3.. 0)
USER(3.. 0)
CODE(7.. 4)
USER(7.. 4)
CODE(11.. 8)
USER(11.. 8)
CODE(15.. 12)
USER(15.. 12)
COMP_0
COMP_1
COMP_2
COMP_3
SOMA_P
P
"1111111"
RESULT(7.. 4)
dec7seg
MUX 2:1
HEX7
"1111111"
RESULT(3.. 0)
E5
HEX6
X
DECODER_TERMOMETRICO
E1
LEDR(15.. 0)
"1111111"
t
HEX5
"1111111"
TIME
E2
HEX4
C
USER(15.. 12)
P
CODE(15.. 12)
SEL(5.. 2)
USER(11.. 8)
'0' & P_REG(2.. 0)
CODE(11.. 8)
L
USER(7.. 4)
E
CODE(7.. 4)
"00" & SEL(1.. 0)
USER(3.. 0)
'0' & E_REG(2.. 0)
CODE(3.. 0)
MUX 4:1
SEL_MUX
HEX3
HEX2
HEX1
HEX0
CLK_1Hz
CLK_500Hz
R1
R2
E1
E2
E3
E4
E5
end_game
end_time
end_round
CONTROLE
KEY1
KEY0
Button sync
enter
reset
CLK_500Hz
LEGENDA
Lab4
Lab5
Lab6
Lab7
Parcialmente dado
Dado
A ser feito