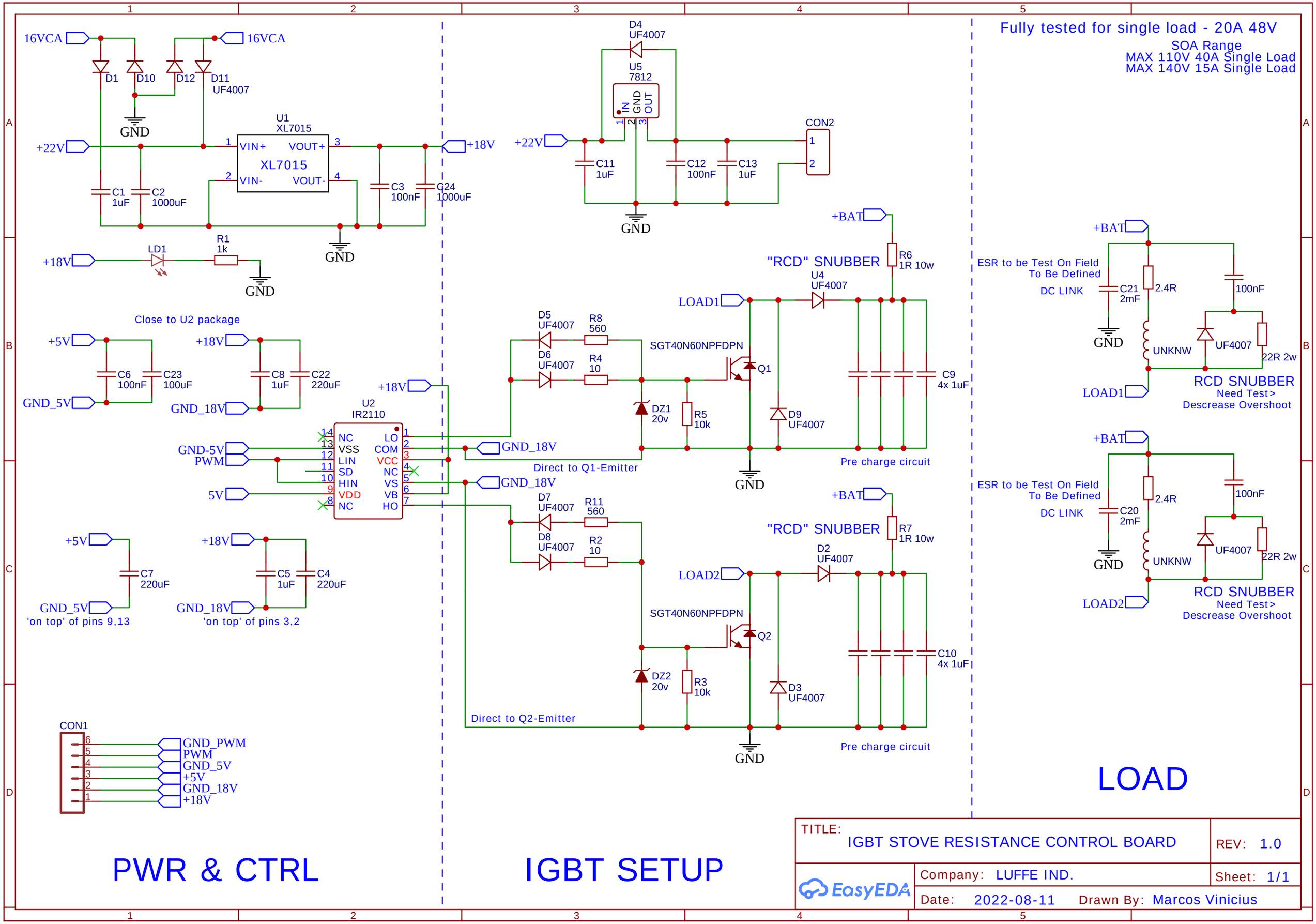
Fully tested for single load - 20A 48V
SOA Range
MAX 110V 40A Single Load
MAX 140V 15A Single Load
16VCA
D1
D10
D12
D11
UF4007
GND
U1
XL7015
VIN+
VOUT+
VIN-
VOUT-
+22V
C1
1uF
C2
1000uF
C3
100nF
C24
1000uF
+18V
LD1
R1
1k
D4
UF4007
U5
7812
IN
GND
OUT
C11
1uF
C12
100nF
C13
1uF
CON2
+BAT
"RCD" SNUBBER
R6
1R 10w
U4
UF4007
LOAD1
Close to U2 package
+5V
C6
100nF
C23
100uF
GND_5V
C8
1uF
C22
220uF
GND_18V
D5
UF4007
R8
560
D6
UF4007
R4
10
SGT40N60NPFDPN
Q1
DZ1
20v
R5
10k
D9
UF4007
C9
4x 1uF
U2
IR2110
NC
VSS
LIN
SD
HIN
VDD
NC
LO
COM
VCC
NC
VS
VB
HO
GND-5V
PWM
5V
Direct to Q1-Emitter
Pre charge circuit
D7
UF4007
R11
560
D8
UF4007
R2
10
R7
1R 10w
D2
UF4007
LOAD2
C7
220uF
C5
1uF
C4
220uF
'on top' of pins 9,13
'on top' of pins 3,2
SGT40N60NPFDPN
Q2
DZ2
20v
R3
10k
D3
UF4007
C10
4x 1uF
Direct to Q2-Emitter
CON1
GND_PWM
PWM
GND_5V
+5V
GND_18V
+18V
ESR to be Test On Field
To Be Defined
DC LINK
C21
2mF
2.4R
100nF
UNKNW
UF4007
22R 2w
RCD SNUBBER
Need Test>
Descrease Overshoot
C20
2mF
LOAD
PWR & CTRL
IGBT SETUP
TITLE:
IGBT STOVE RESISTANCE CONTROL BOARD
REV: 1.0
Company: LUFFE IND.
Sheet: 1/1
Date: 2022-08-11
Drawn By: Marcos Vinicius
EasyEDA