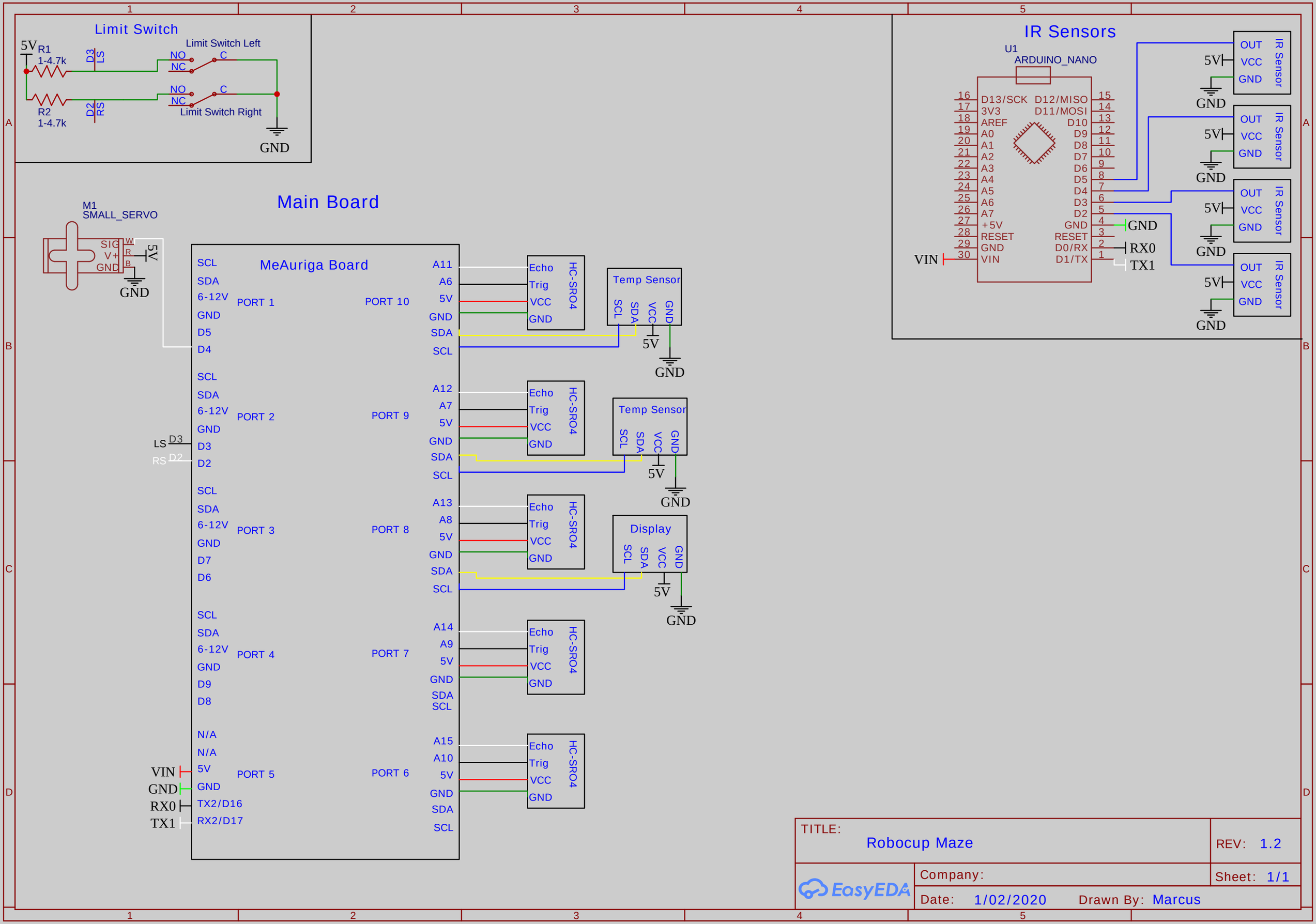

TITLE: Robocup Maze		REV: 1.2
EasyEDA	Company:	Sheet: 1/1
	Date: 1/02/2020 Drawn By: Marcus	