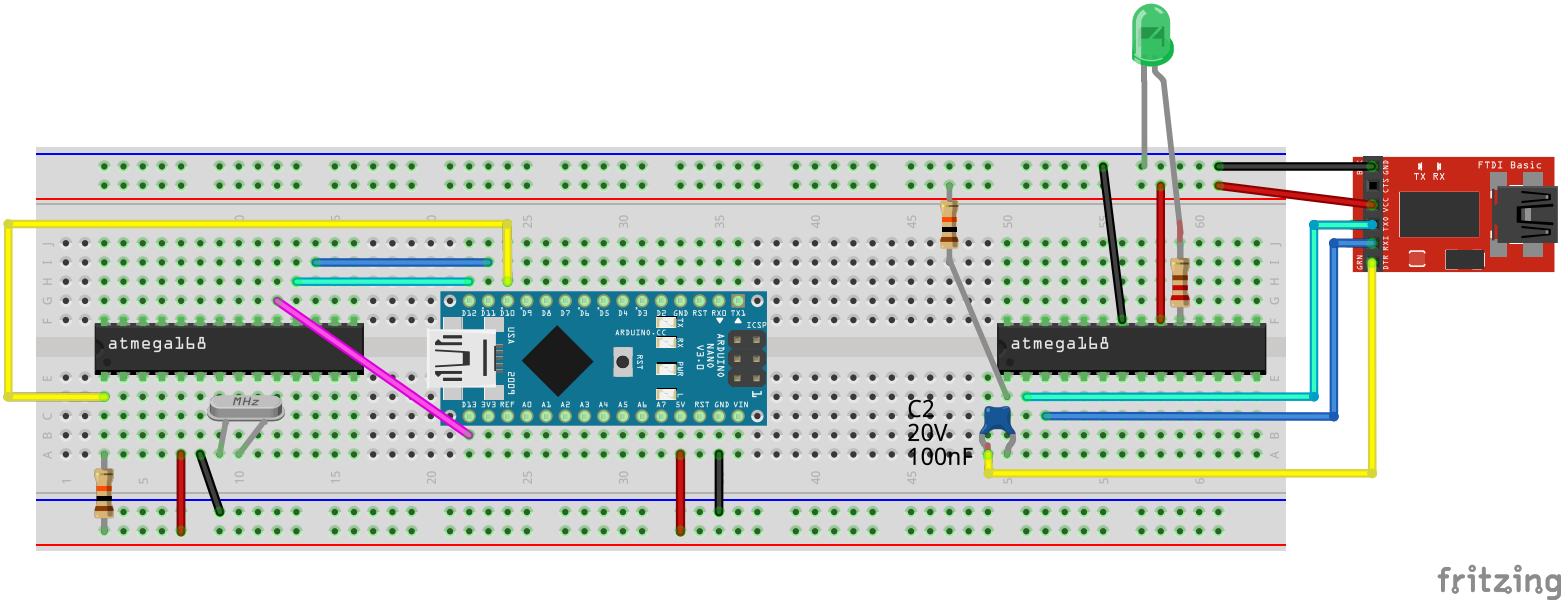
atmega168
MHz
ARDUINO NANO V3.0
atmega168
C2
20V
100nF
FTDI Basic
TX RX
DTR RXI TXO VCC CTS GND
GND

fritzing