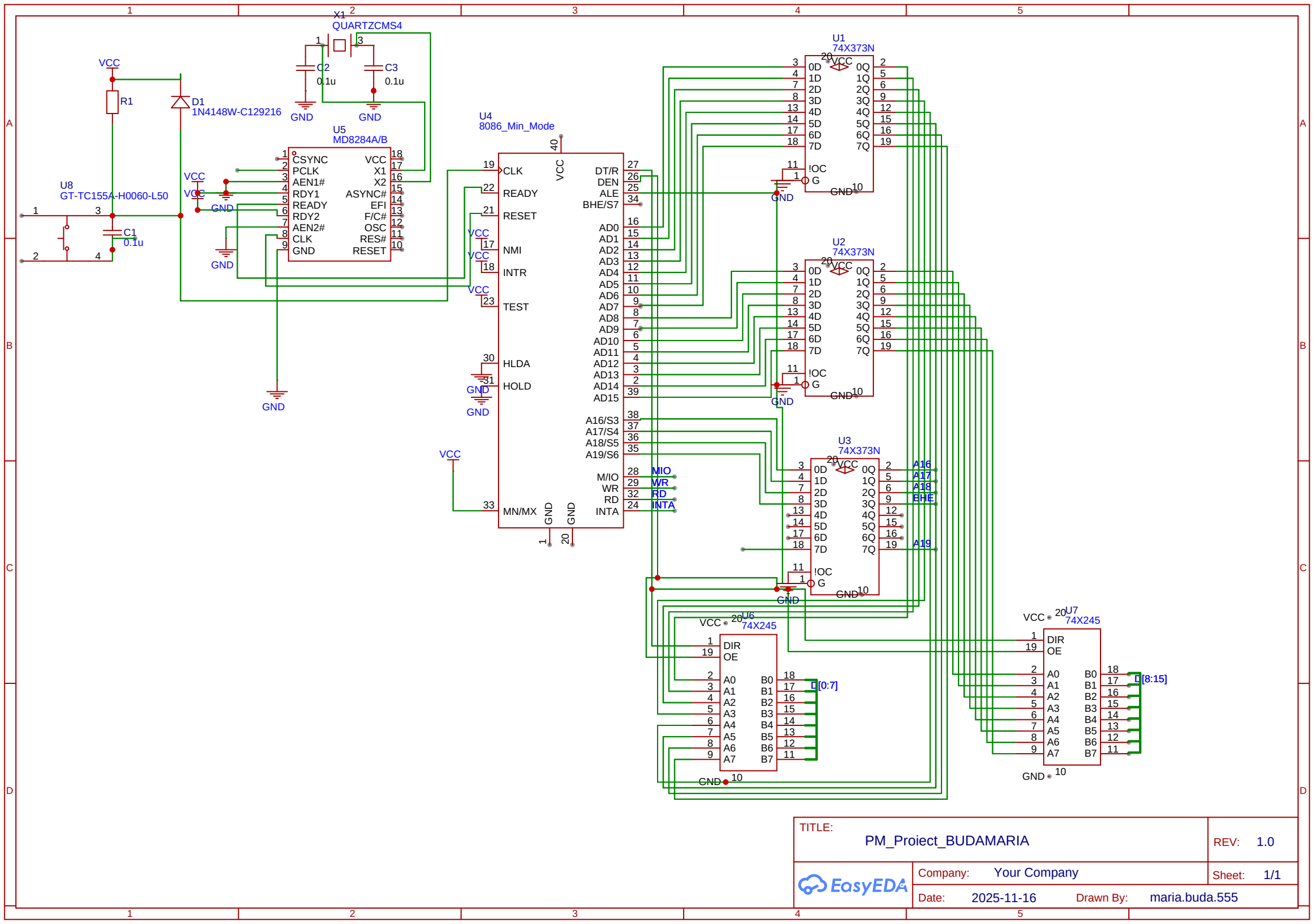

TITLE: PM_Proiect_BUDAMARIA			REV: 1.0
EasyEDA	Company: Your Company		Sheet: 1/1
	Date: 2025-11-16	Drawn By: maria.buda.555	

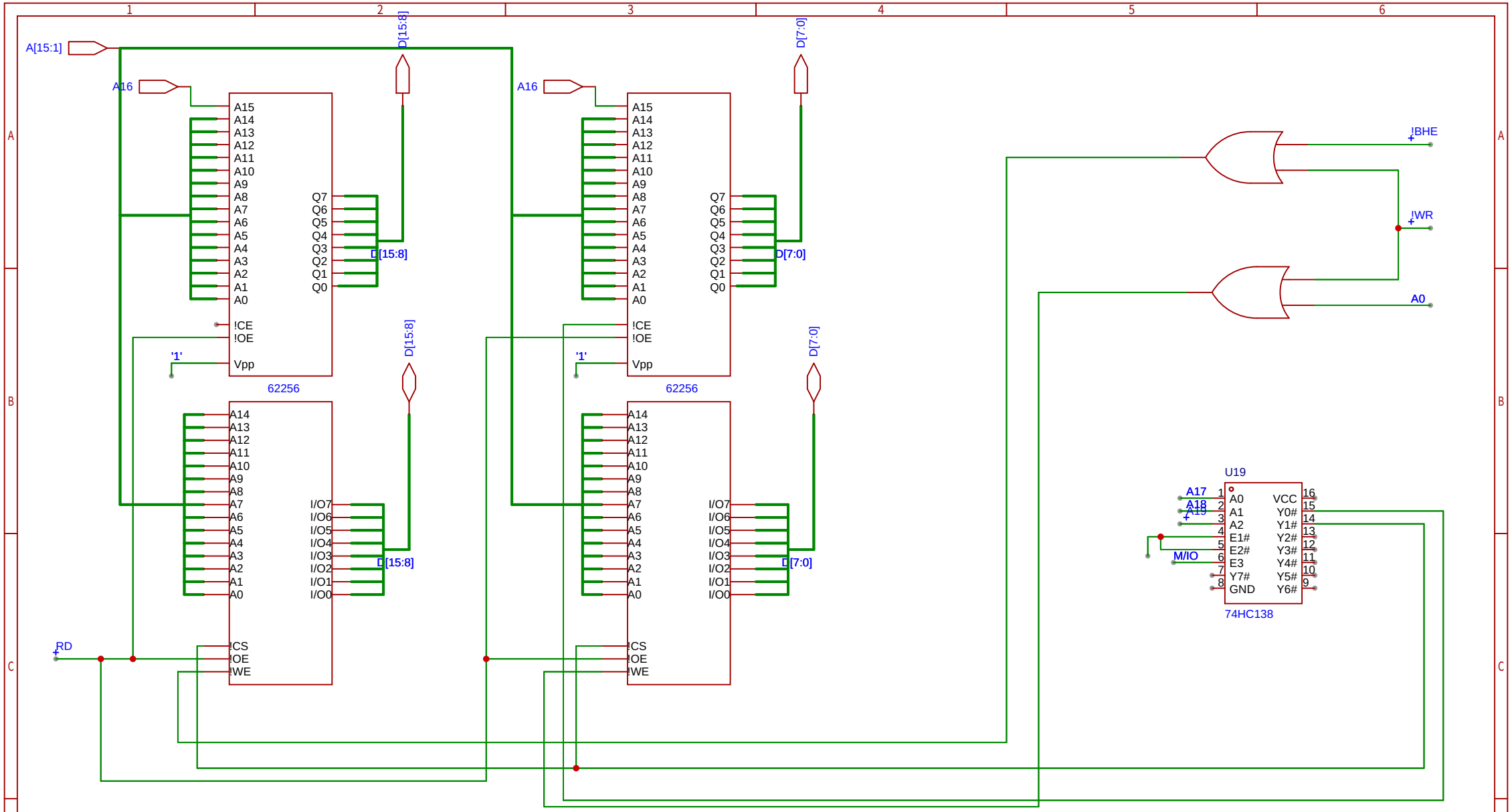

Schematic	PM_Proiect	Create at	2025-12-12
		Update at	2025-12-18
Board	PM_Proiect	Page	conectarea memoriilor
Drawn		PM_Proiect_BUDAMARIA	
Reviewed			
		Version	Size	Page 2 Total 4
EasyEDA		V1.0	A4	EasyEDA.com

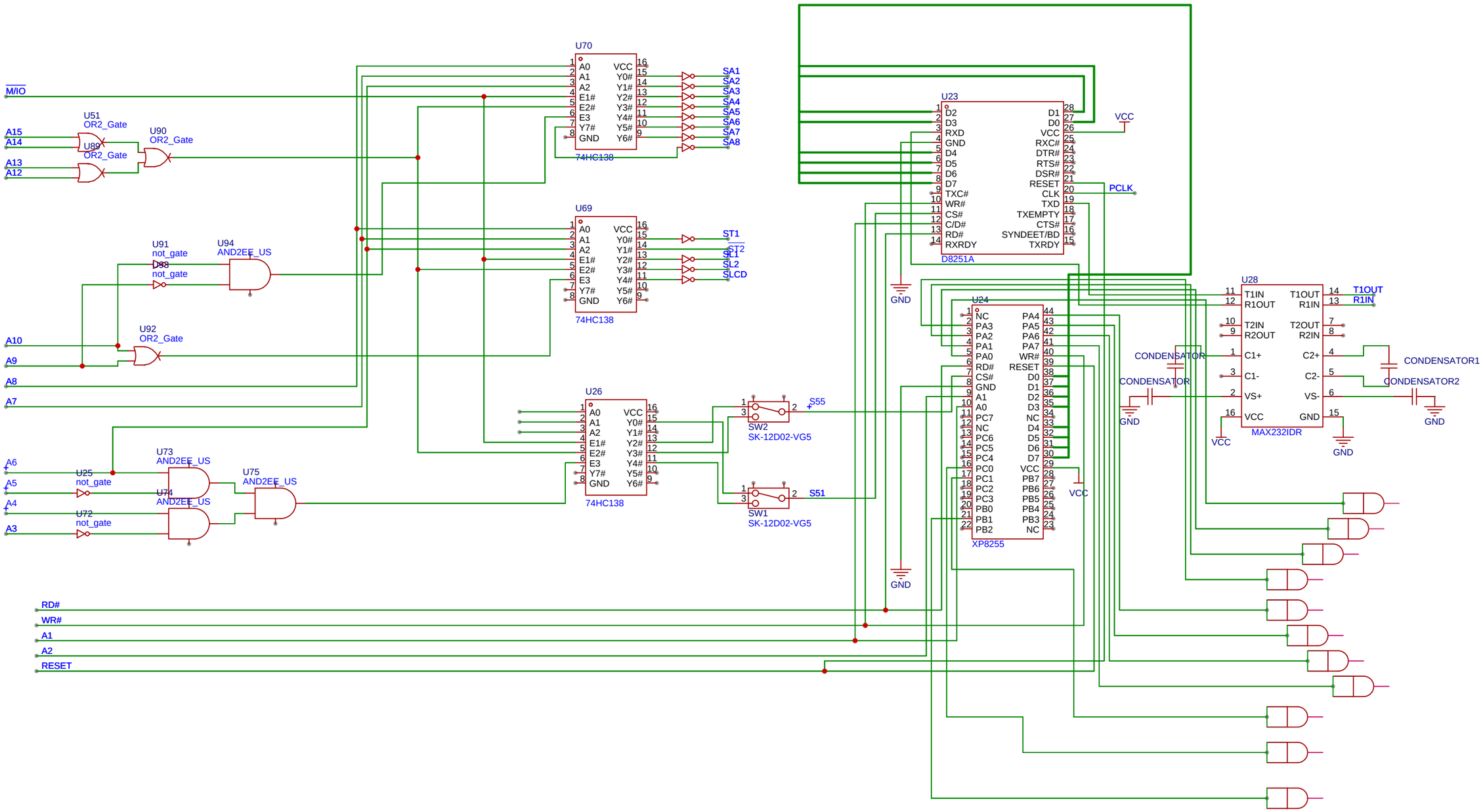

Schematic	PM_Proiect	Create at	2025-12-13
		Update at	2025-12-15
Board	PM_Proiect	Page	interfata seriala si paralela si decodificator
Drawn		PM_Proiect_BUDAMARIA	
Reviewed			
		Version	Size	Page 3 Total 4
EasyEDA		V1.0	A4	EasyEDA.com

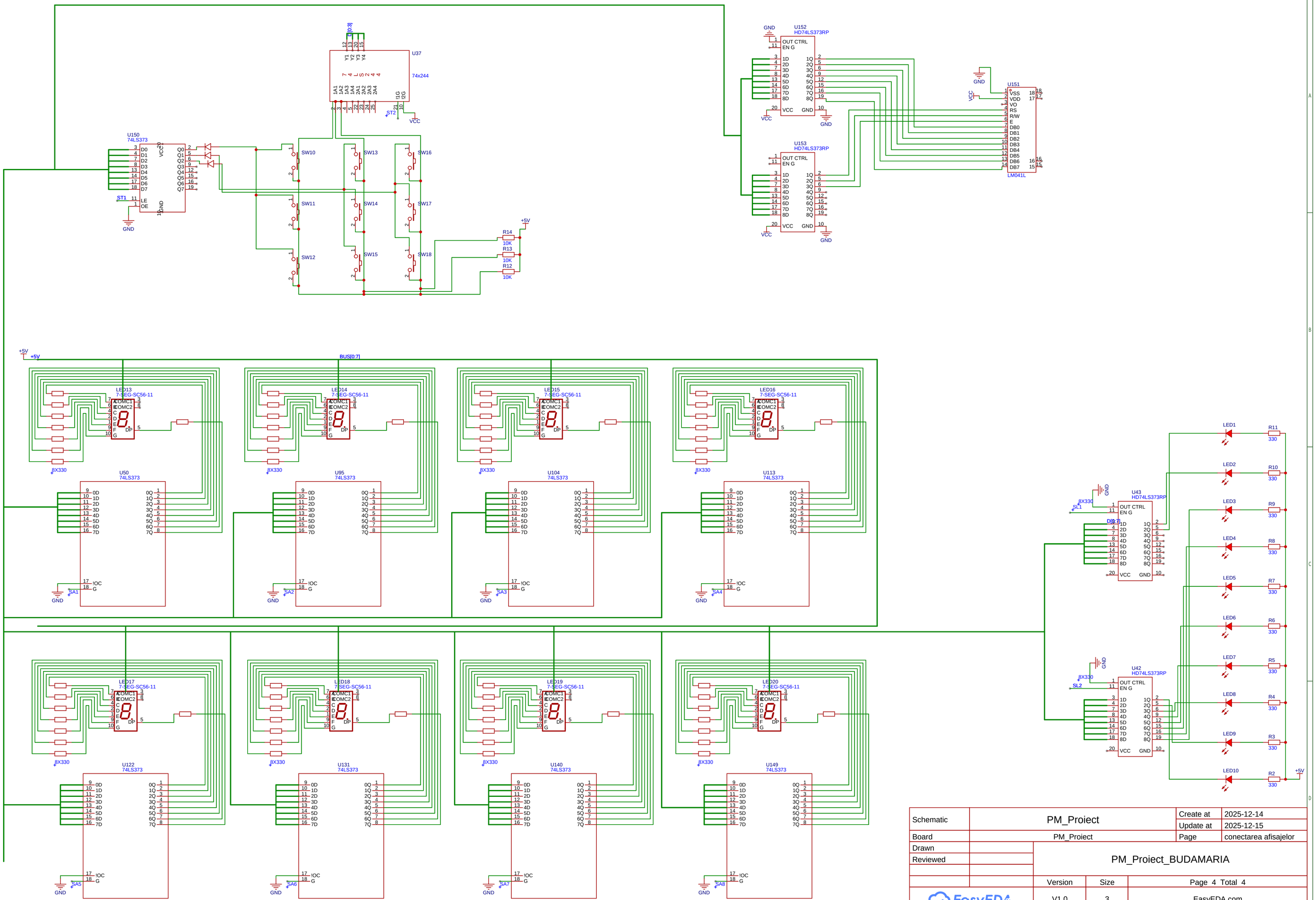

Schematic	PM_Proiect	Create at	2025-12-14
		Update at	2025-12-15
Board	PM_Proiect	Page	conectarea afisajelor
Drawn	PM_Proiect_BUDAMARIA		
Reviewed			
		Version	Size	Page 4 Total 4
EasyEDA		V1.0	3	EasyEDA.com