- The Von Neumann Architecture
- Levels of programming languages

CSE 101 Section 03

Introduction to Algorithms and Computing

Fall 2023

© Royal Military College of Canada

Some History

- In 1945, this guy

John von Neumann
mathematician,
physicist,
computer scientist,
engineer

published a document called the *"First Draft of a Report on the EDVAC"*

- This document contains a description of a *design architecture* for an electronic digital computer. The first of its kind.

Von Neumann architecture

- The basic structure proposed in the draft became known as the "von Neumann machine" (or model).
  - a *memory*, containing instructions and data
  - an *arithmetic/logic unit*, for performing arithmetic and logical operations
  - a *control unit*, for interpreting instructions

Von Neumann architecture: Overview

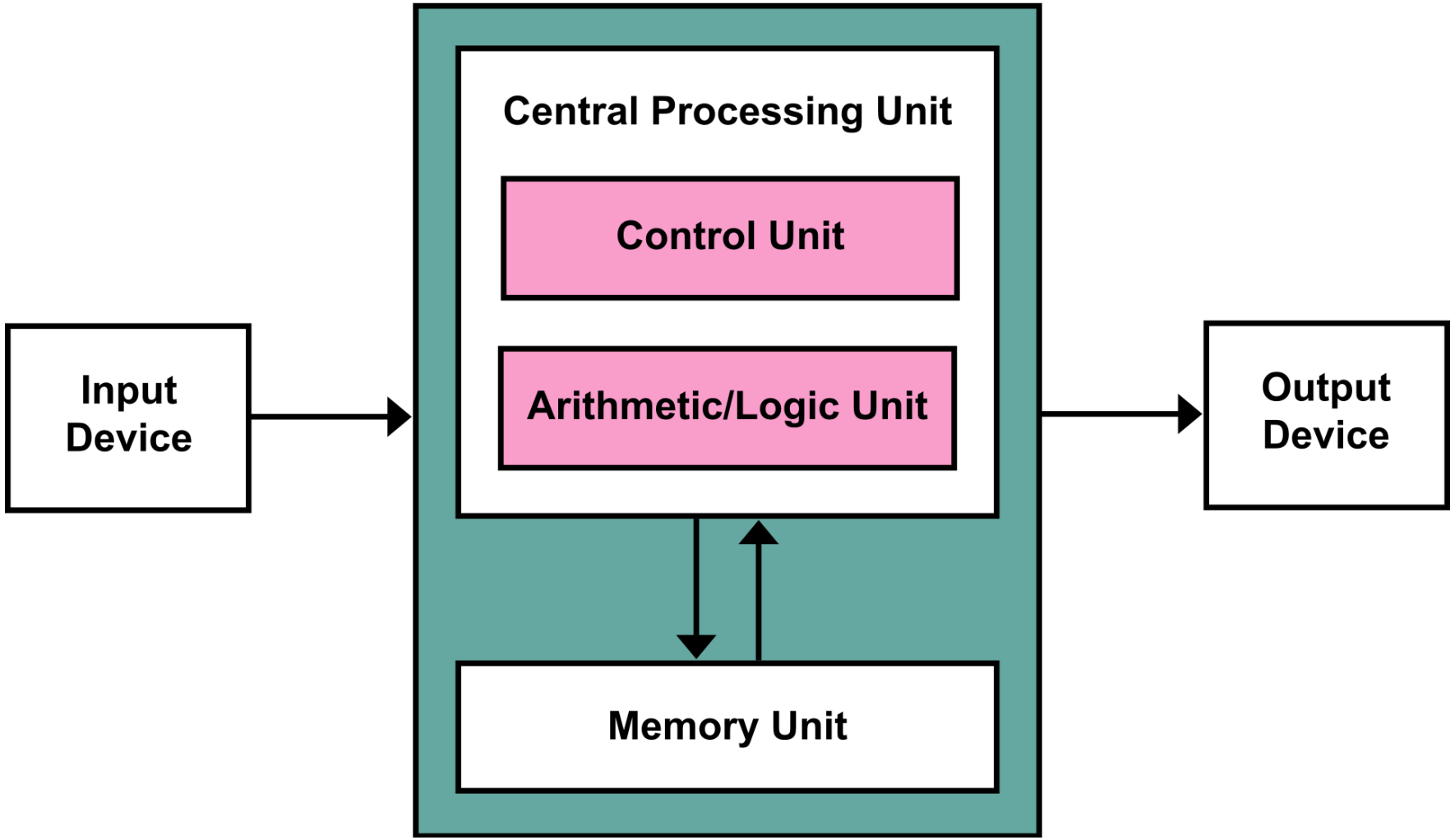

Source: https://en.wikipedia.org/wiki/Von_Neumann_architecture#/media/File:Von_Neumann_Architecture.svg

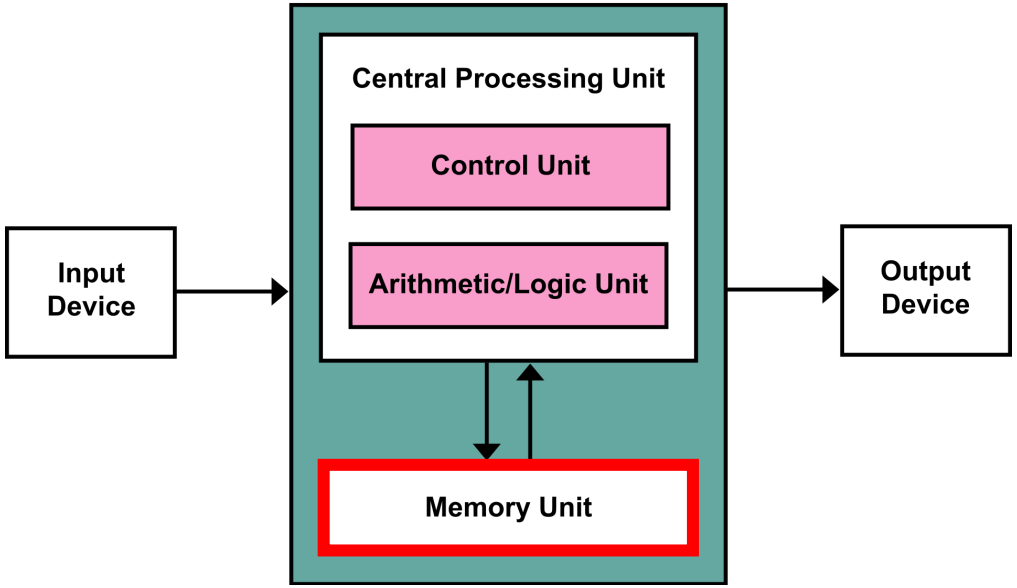

Memory Unit

- The Memory unit stores data and instructions (code).
- The memory unit is referred to as primary, main memory, or RAM. Unlike a hard drive (secondary memory), this memory is fast and also directly accessible by the CPU.
- The memory unit is split into partitions. Each partition consists of an address and its contents (both in binary form).

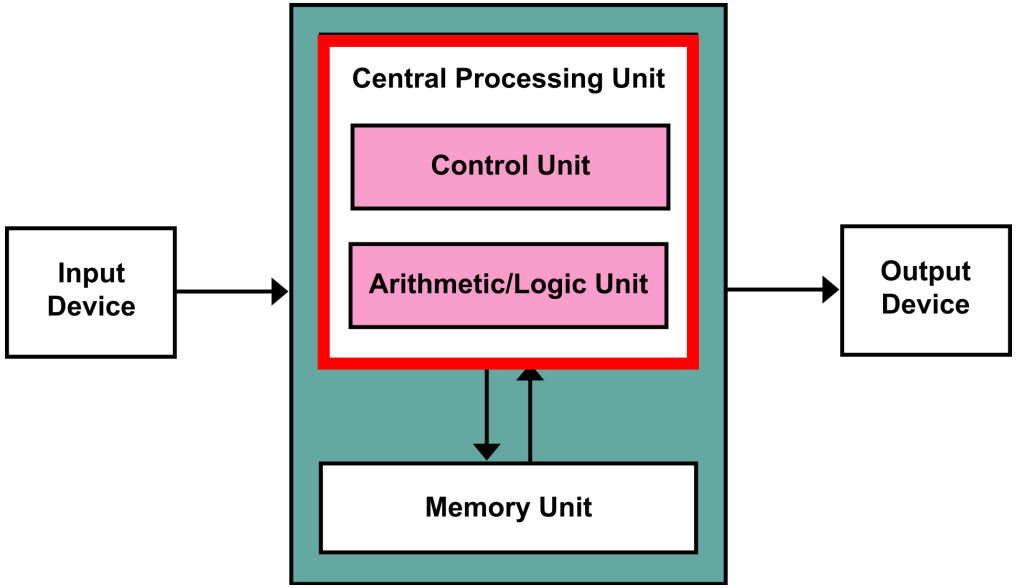

Central Processing Unit (CPU)

- The brain of a computer
- Inside the CPU, we have:
  - *The control unit*: It directs all input and output flow, fetches code for instructions, and controls how data moves around the system.
  - *The arithmetic/Logic unit*: the part of the CPU that handles all the calculations the CPU may need, e.g. Addition, Subtraction, Comparisons. It performs Logical Operations, Bit Shifting Operations, and Arithmetic operations.
  - *Registers* (Not pictured): small amounts of high-speed memory contained within the CPU.

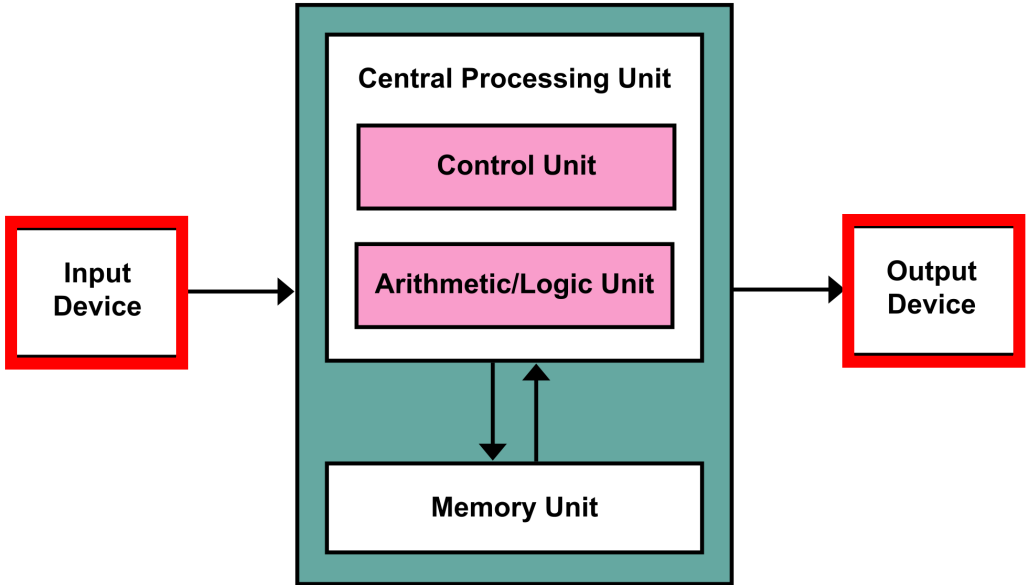

Input/Output devices

- Inputs are the signals or data *received* by the system and outputs are the signals or data *sent* from it.
- I/O devices are the pieces of hardware used by a human (or other system) to *communicate* with a computer.
- For instance, a keyboard or computer mouse is an input device for a computer, while monitors and printers are output devices.

Fetch-Decode-Execute cycle

Or how the CPU components (pictured on the right) communicate to run instructions

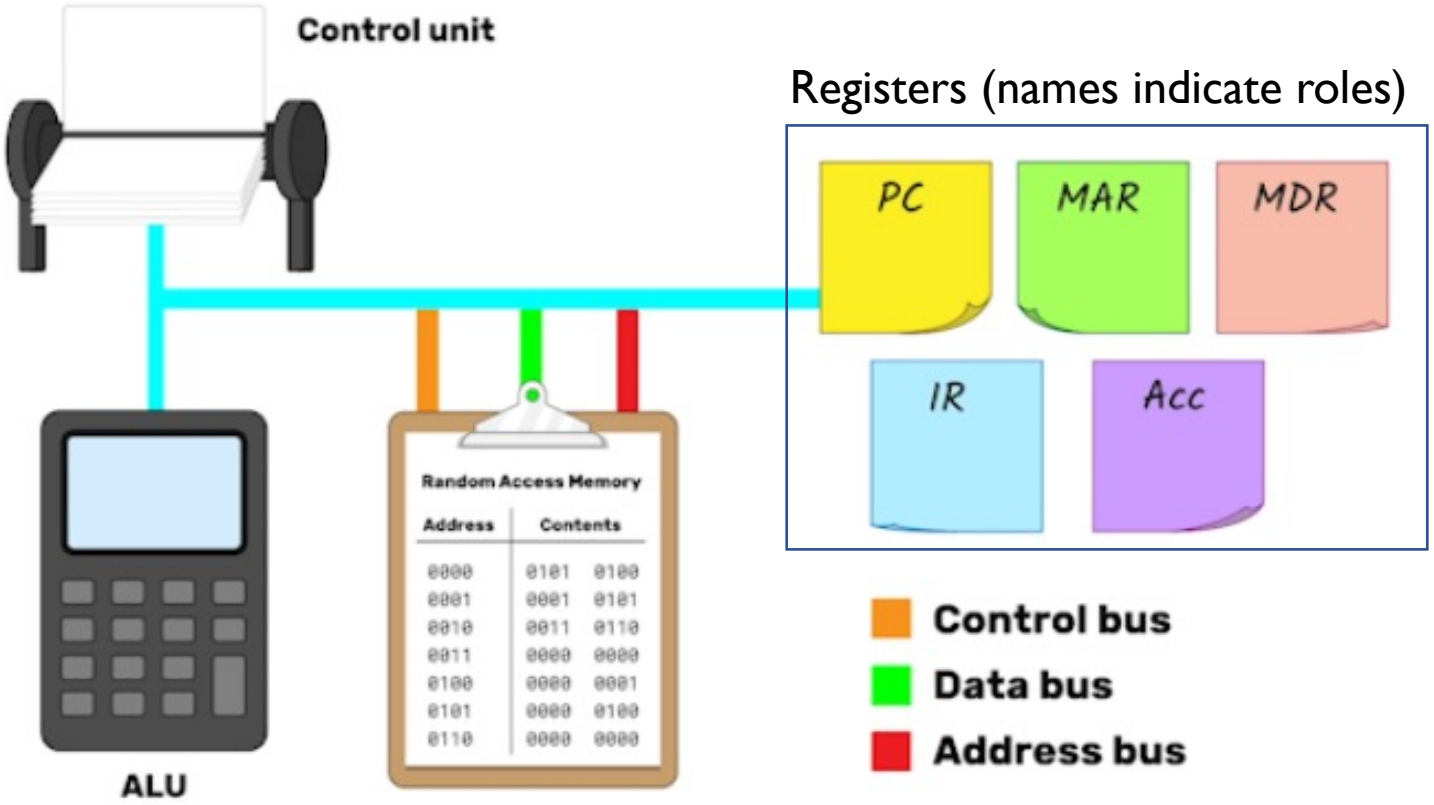

Fetch-Decode-Execute cycle

- **Fetch stage**: The next instruction is fetched from the memory address that is currently stored in the program counter (PC on previous slide).
- **Decode stage**: During this stage, the encoded instruction presented in the instruction register (IR on previous slide) is interpreted by the control unit.
- **Execute stage**: The control unit of the CPU passes the decoded information as a sequence of control signals to the relevant units of the CPU to perform the actions required by the instruction,
  - such as reading values from registers,
  - passing them to the ALU to perform mathematical or logic functions on them,
  - and writing the result back to a register

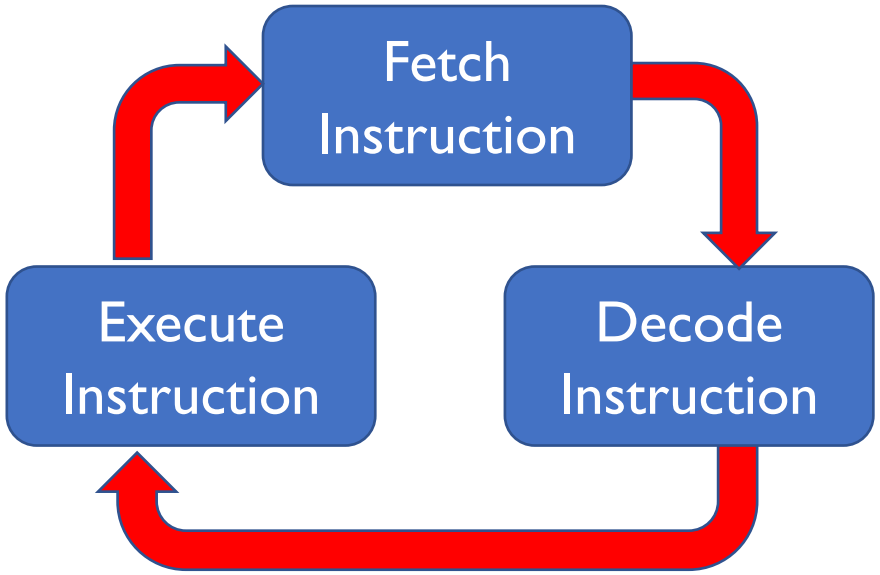

Levels of Programming Languages

Three levels

Machine Language

Assembly Language

High level Language

Machine Language

- The machine-level language is a language that consists of a set of instructions that are in the binary form `0` or `1`.
- Fast to execute.
- Not human friendly: hard to understand, error-prone, maintenance cost high.

- Example: `10110000 01100001` tells a specific type of processor to move an immediate 8-bit value into a register called AL.

- This binary computer code can be made more human-readable by expressing it in hexadecimal as follows: `B0 61`
  - `B0` means 'Move a copy of the following value into `AL`, and `61` is a hexadecimal representation of the value `01100001`

Assembly Language

- The assembly language contains some human-readable commands such as `mov`, `add`, `sub`, etc.

- Machine specific: The assembly language code is not portable because the data is stored in computer registers, and the computer has to know the different sets of registers.

- The instruction from the previous slide in assembly

```
MOV AL, 61h  ; Load AL with 97 decimal (61 hex)
```

- Easier to read, write, and maintain.

High level Language

- A high-level language is a programming language that allows a programmer to write the programs which are independent of a particular type of computer (e.g. Matlab, Python, Java, C) .

- The high-level languages are considered as high-level because they are closer to human languages than machine-level languages.

Example

- Which of the followings are *machine* code, *assembly* code and *high level language* code?

1)

```
LOAD A, F1
ADD X, D0
```

2)

```
c = a + b
print(c)
```

3)

```
000E 0AF1
00FF 02AB
```