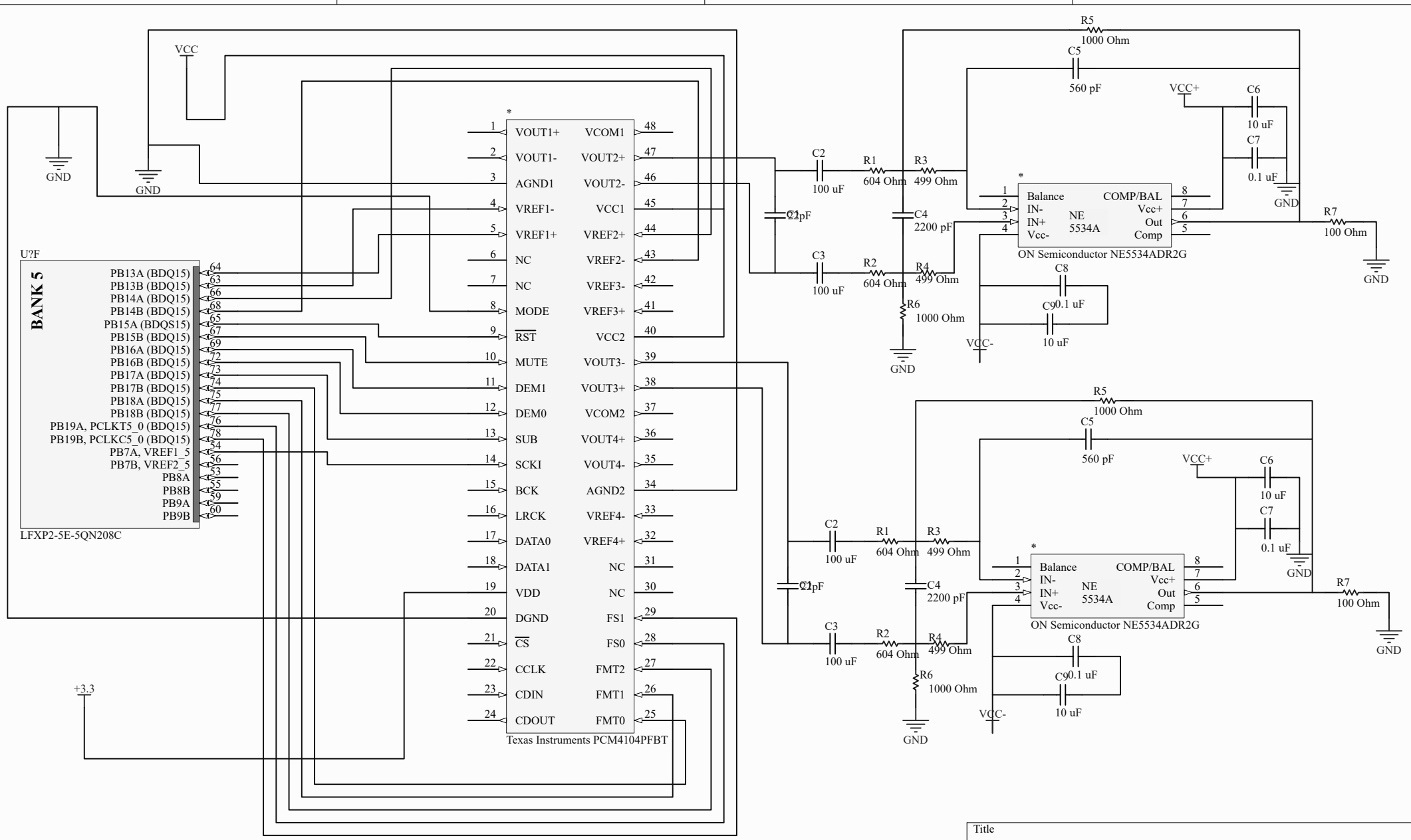

Title		
Size A4	Number	Revision
Date: 10-03-2021		Sheet of
File: DAC.SchDoc		Drawn By: