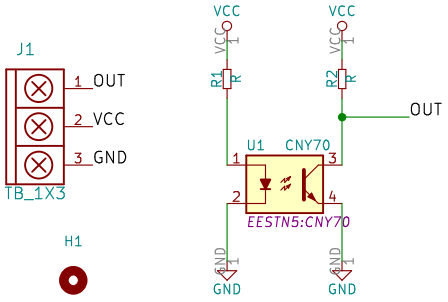

E.E.S.T. N°5

Sheet: /
File: TP1_MIRANDA.sch

Title: Sensor Tatami CNY70

Size: A4	Date: 15/04/2017	**Rev: 0.1**
KiCad E.D.A. kicad 4.0.1-stable		Id: 1/1