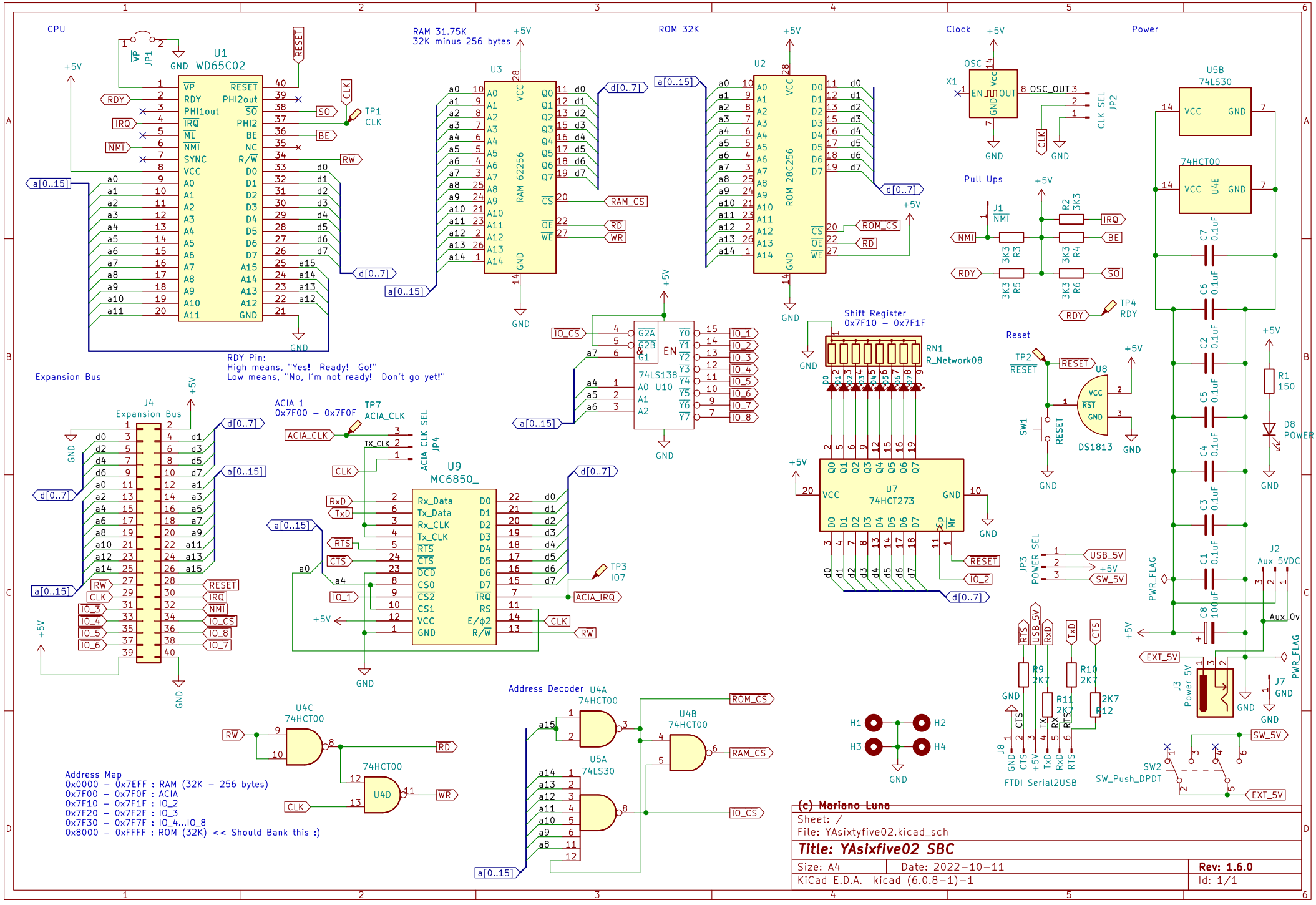
CPU
U1
WD65C02
JP1
VP
RDY
PHI1out
IRQ
ML
NMI
SYNC
VCC
A0
A1
A2
A3
A4
A5
A6
A7
A8
A9
A10
A11
RESET
PHI2out
SO
PHI2
BE
NC
R/W
D0
D1
D2
D3
D4
D5
D6
D7
A15
A14
A13
A12
GND
RAM 31.75K
32K minus 256 bytes
U3
RAM 62256
ROM 32K
U2
ROM 28C256
Clock
X1
OSC
OSC_OUT
CLK SEL
JP2
Power
U5B
74LS30
74HCT00
U4E
Pull Ups
J1
NMI
R2 3K3
R3 3K3
R4 3K3
R5 3K3
R6 3K3
TP4
RDY
Shift Register
0x7F10 – 0x7F1F
RN1
R_Network08
U7
74HCT273
Reset
TP2
U8
DS1813
SW1
R1 150
D8
POWER
C1 0.1uF
C2 0.1uF
C3 0.1uF
C4 0.1uF
C5 0.1uF
C6 0.1uF
C7 0.1uF
C8 100uF
J2
Aux 5VDC
Aux_0v
PWR_FLAG
EXT_5V
J3
Power 5V
J7
GND
JP3
POWER SEL
USB_5V
SW_5V
R9 2K7
R10 2K7
R11 2K7
R12 2K7
J8
FTDI Serial2USB
SW2
SW_Push_DPDT
TP1
CLK
TP3
IO7
IO_CS
IO_1
IO_2
IO_3
IO_4
IO_5
IO_6
IO_7
IO_8
74LS138
U10
RDY Pin:
High means, "Yes! Ready! Go!"
Low means, "No, I'm not ready! Don't go yet!"
Expansion Bus
J4
Expansion Bus
ACIA 1
0x7F00 – 0x7F0F
TP7
ACIA_CLK
JP4
ACIA CLK SEL
U9
MC6850_
Rx_Data
Tx_Data
Rx_CLK
Tx_CLK
RTS
CTS
DCD
CS0
CS2
CS1
VCC
GND
D0
D1
D2
D3
D4
D5
D6
D7
IRQ
RS
E/ϕ2
R/W
ACIA_IRQ
U4C
74HCT00
U4D
74HCT00
Address Decoder
U4A
74HCT00
U4B
74HCT00
U5A
74LS30
ROM_CS
RAM_CS
IO_CS
H1
H2
H3
H4
Address Map
0x0000 – 0x7EFF : RAM (32K – 256 bytes)
0x7F00 – 0x7F0F : ACIA
0x7F10 – 0x7F1F : IO_2
0x7F20 – 0x7F2F : IO_3
0x7F30 – 0x7F7F : IO_4...IO_8
0x8000 – 0xFFFF : ROM (32K) << Should Bank this :)
(c) Mariano Luna
Sheet: /
File: YAsixtyfive02.kicad_sch
Title: YAsixfive02 SBC
Size: A4
Date: 2022-10-11
Rev: 1.6.0
KiCad E.D.A. kicad (6.0.8-1)-1
Id: 1/1