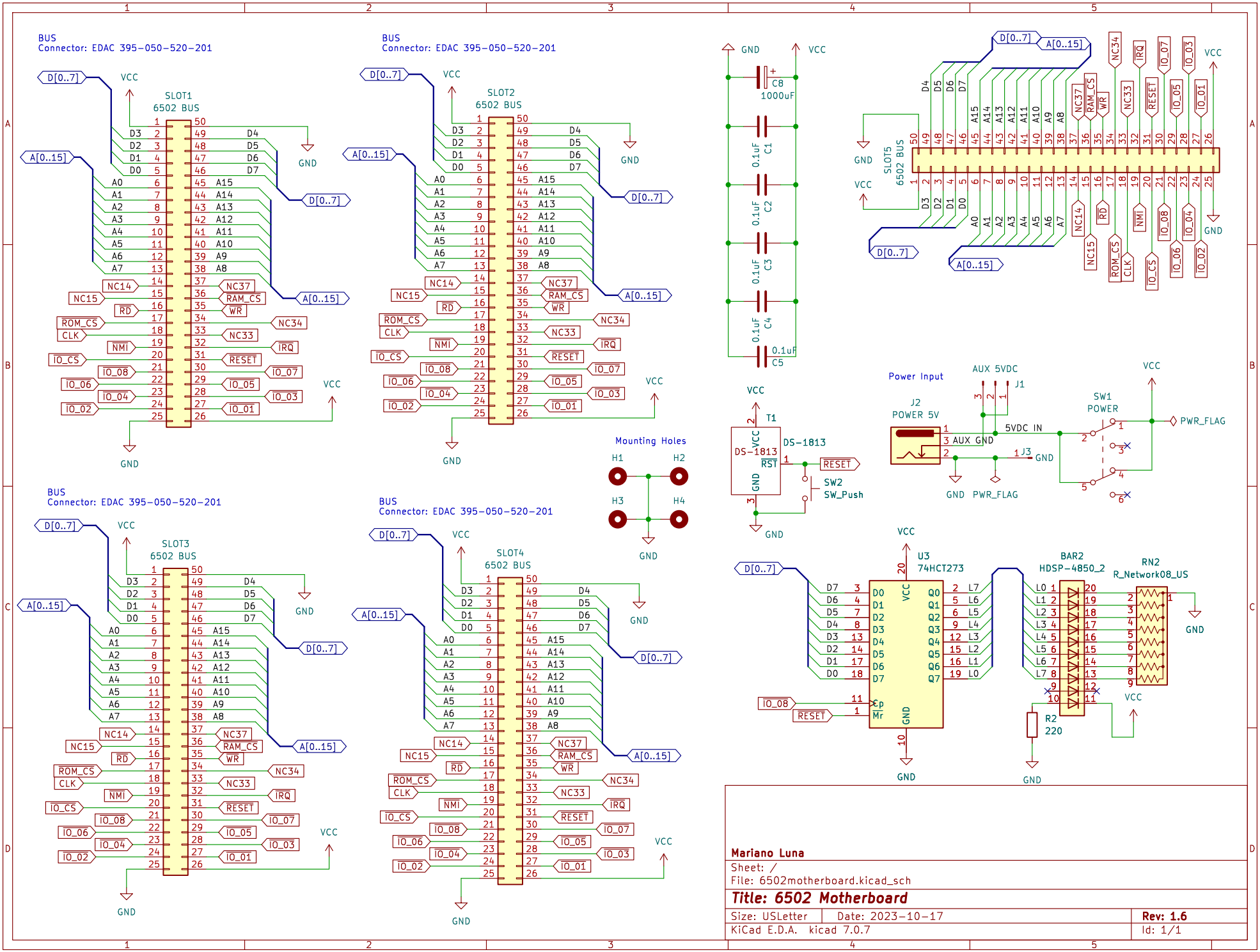

Mariano Luna

Sheet: /

File: 6502motherboard.kicad_sch

Title: 6502 Motherboard

Size: USLetter	Date: 2023-10-17	Rev: 1.6
KiCad E.D.A. kicad 7.0.7		Id: 1/1