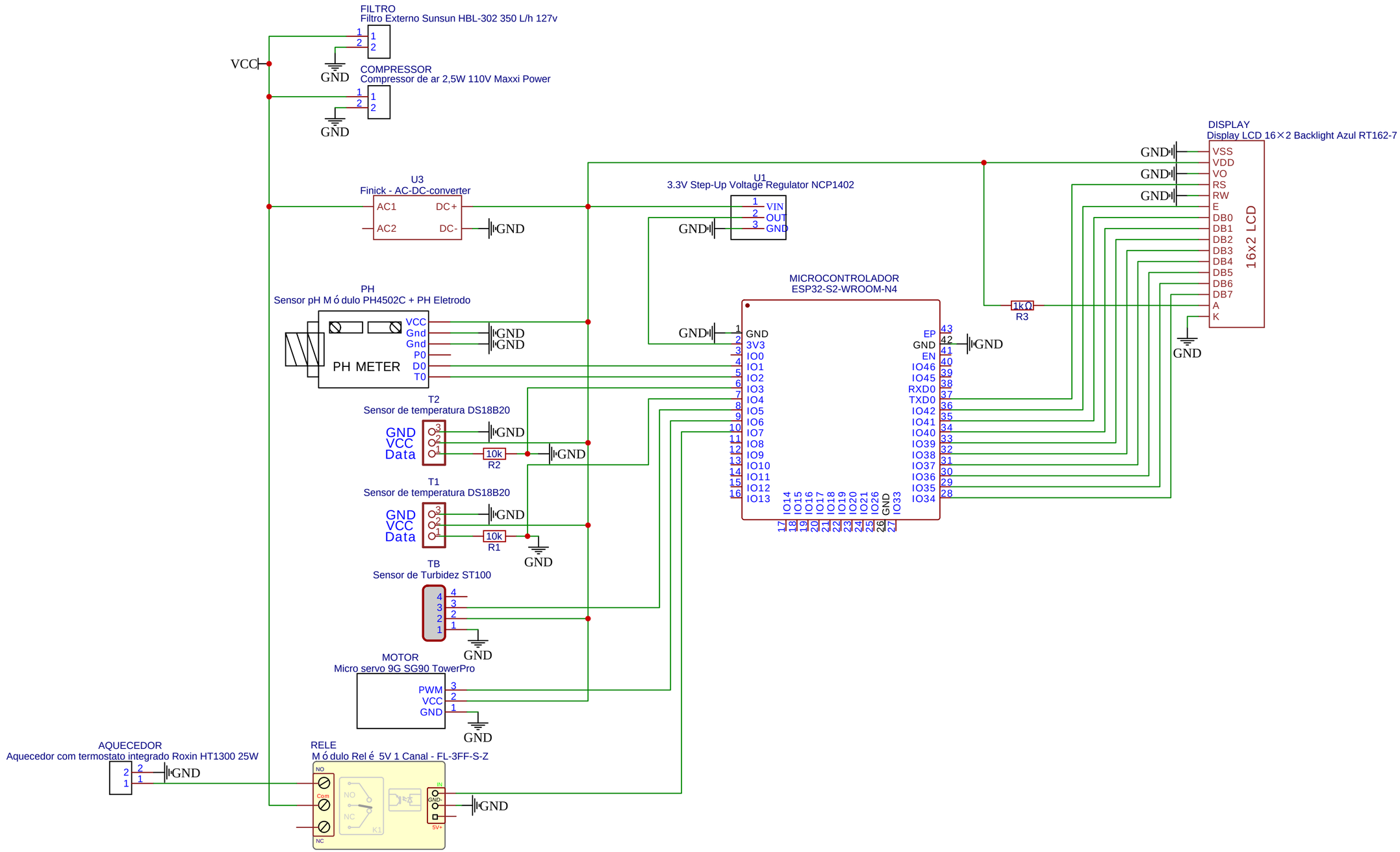

TITLE: Sheet_1		REV: 1.0
	Company: Your Company	Sheet: 1/1
	Date: 2022-11-22 Drawn By: Luis Felipe Da Silva Teruel	