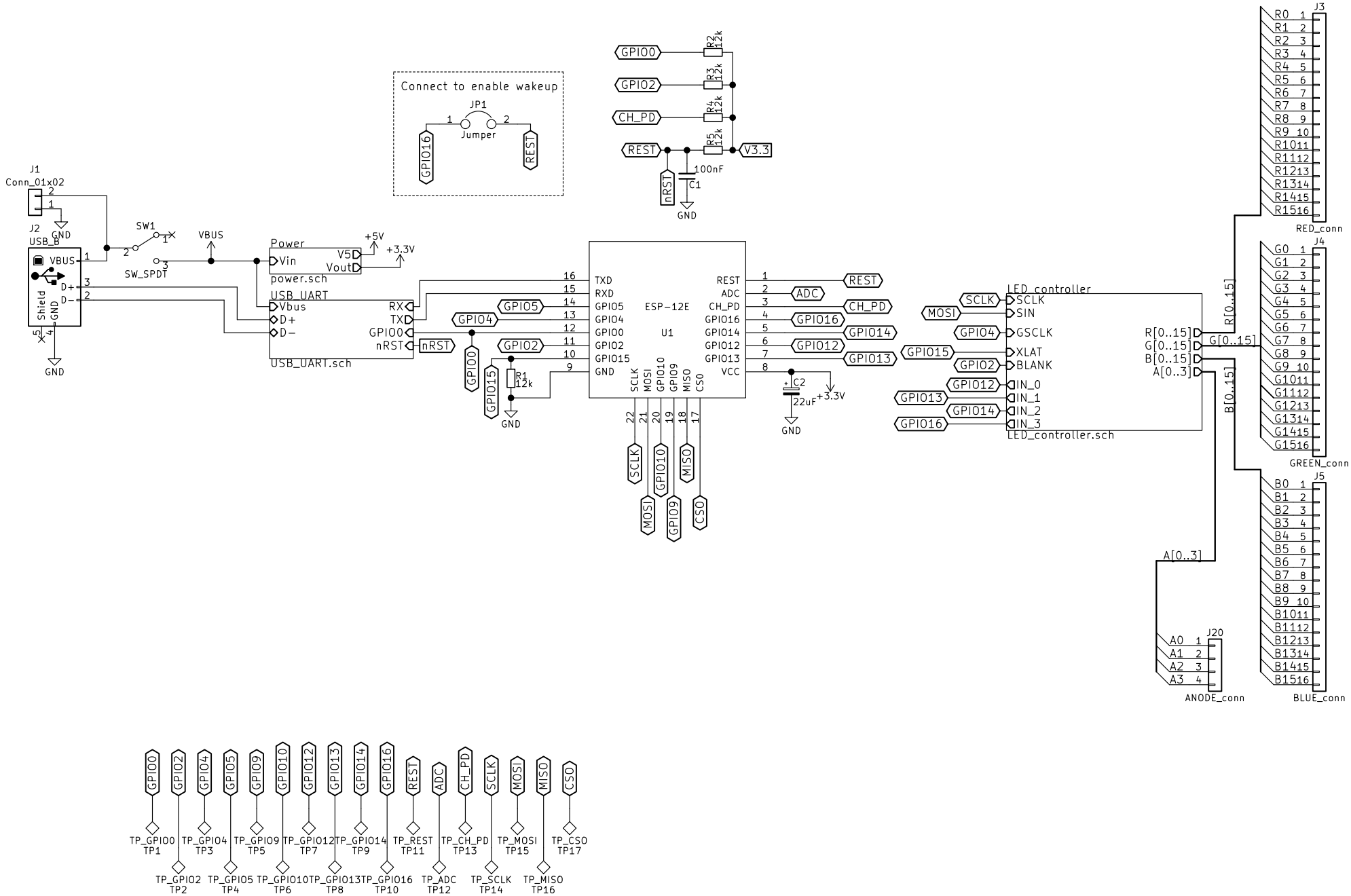
Connect to enable wakeup
JP1
Jumper
GPIO16
REST
J1
Conn_01x02
J2
USB_B
VBUS
D+
D-
Shield
GND
SW1
SW_SPDT
VBUS
Power
Vin
V5
Vout
+5V
+3.3V
power.sch
USB_UART
Vbus
D+
D-
RX
TX
GPIO0
nRST
USB_UART.sch
GPIO0
GPIO2
CH_PD
REST
R2 12k
R3 12k
R4 12k
R5 12k
V3.3
nRST
C1
100nF
GND
GPIO5
GPIO4
GPIO2
GPIO0
GPIO15
R1 12k
ESP-12E
U1
TXD
RXD
GPIO5
GPIO4
GPIO0
GPIO2
GPIO15
GND
REST
ADC
CH_PD
GPIO16
GPIO14
GPIO12
GPIO13
VCC
SCLK
MOSI
GPIO10
GPIO9
MISO
CS0
C2
22uF
+3.3V
LED_controller
SCLK
SIN
GSCLK
XLAT
BLANK
IN_0
IN_1
IN_2
IN_3
R[0..15]
G[0..15]
B[0..15]
A[0..3]
LED_controller.sch
J3
RED_conn
J4
GREEN_conn
J5
BLUE_conn
J20
ANODE_conn
A0
A1
A2
A3
TP_GPIO0 TP1
TP_GPIO2 TP2
TP_GPIO4 TP3
TP_GPIO5 TP4
TP_GPIO9 TP5
TP_GPIO10 TP6
TP_GPIO12 TP7
TP_GPIO13 TP8
TP_GPIO14 TP9
TP_GPIO16 TP10
TP_REST TP11
TP_ADC TP12
TP_CH_PD TP13
TP_SCLK TP14
TP_MOSI TP15
TP_MISO TP16
TP_CS0 TP17

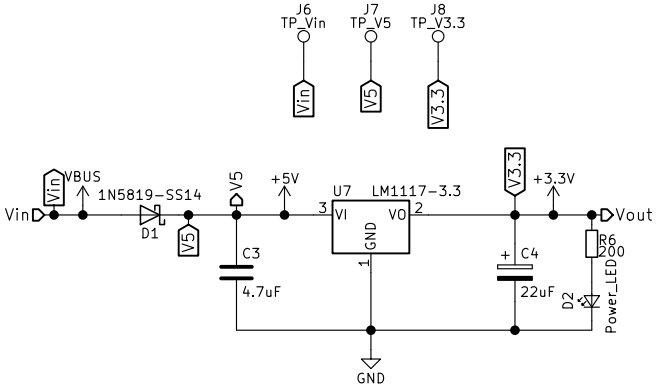
J6
TP_Vin
J7
TP_V5
J8
TP_V3.3
Vin
V5
V3.3
Vin
VBUS
1N5819-SS14
D1
V5
V5
+5V
C3
4.7uF
U7
LM1117-3.3
3
VI
VO
2
GND
1
V3.3
+3.3V
C4
22uF
Vout
R6
200
D2
Power_LED
GND

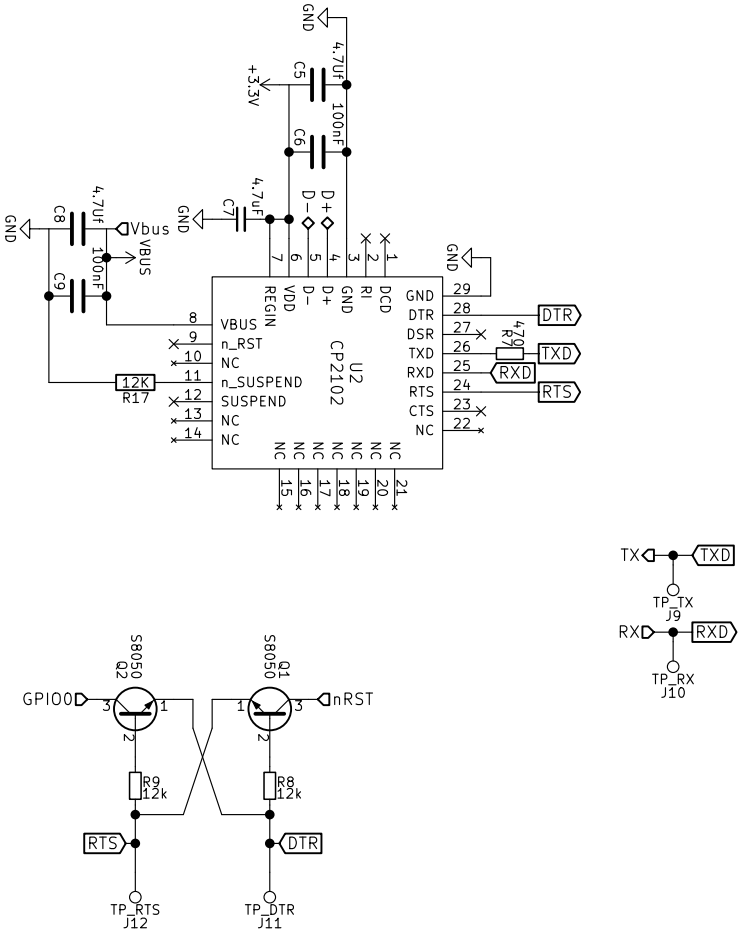
GND
4.7uF
100nF
C5
C6
+3.3V
D+
D-
4.7uF
C7
GND
Vbus
VBUS
C8
C9
U2
CP2102
VBUS
n_RST
NC
n_SUSPEND
SUSPEND
NC
NC
REGIN
VDD
D-
D+
GND
RI
DCD
GND
DTR
DSR
TXD
RXD
RTS
CTS
NC
12K
R17
470
R18
DTR
TXD
RXD
RTS
TX
TXD
TP_TX
J9
RX
RXD
TP_RX
J10
S8050
Q2
S8050
Q1
GPIO0
nRST
R9
12k
R8
12k
RTS
DTR
TP_RTS
J12
TP_DTR
J11

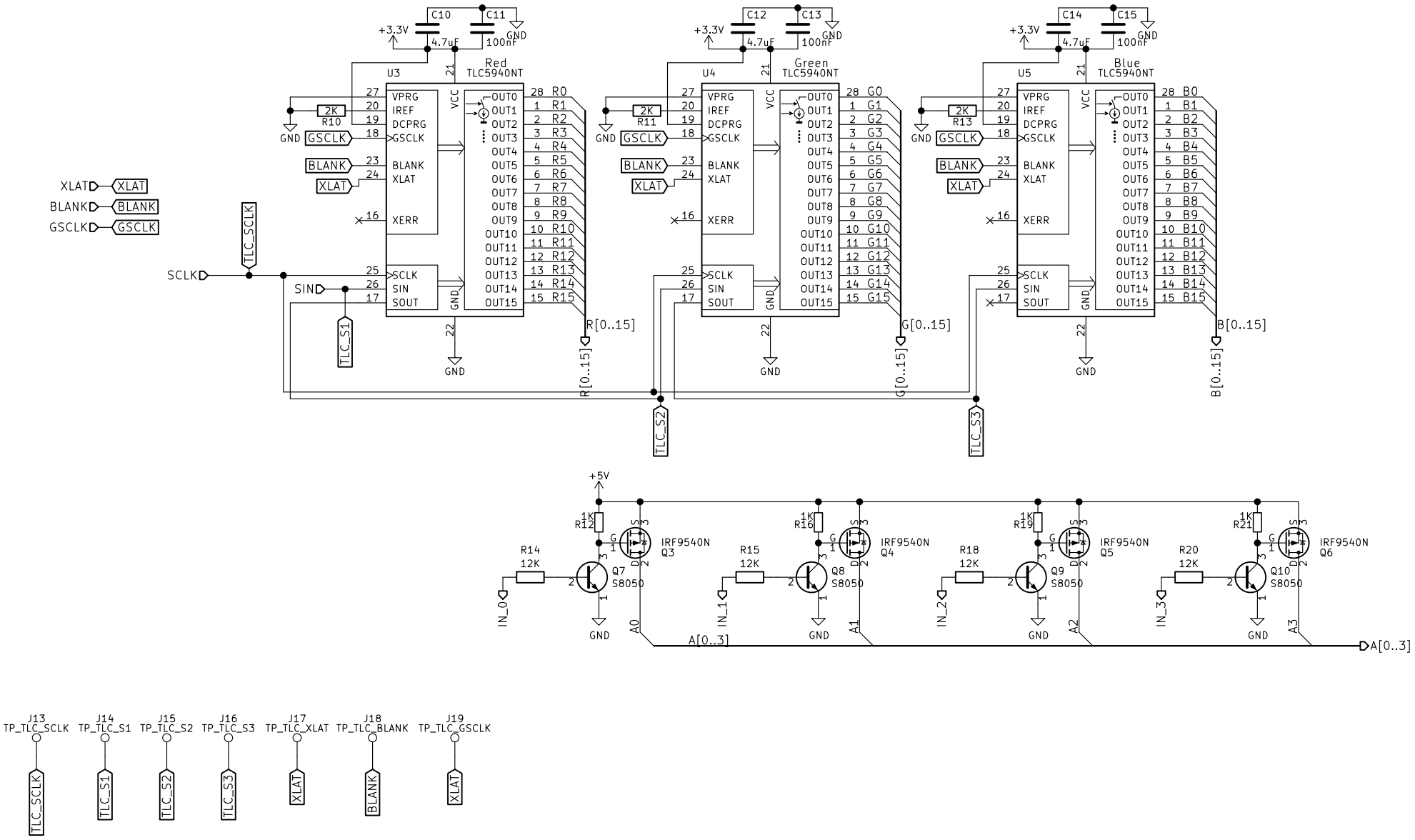
U3
Red
TLC5940NT
U4
Green
TLC5940NT
U5
Blue
TLC5940NT
C10
C11
C12
C13
C14
C15
+3.3V
4.7uF
100nF
GND
R10
R11
R13
2K
VPRG
IREF
DCPRG
GSCLK
BLANK
XLAT
XERR
SCLK
SIN
SOUT
VCC
OUT0
OUT1
OUT2
OUT3
OUT4
OUT5
OUT6
OUT7
OUT8
OUT9
OUT10
OUT11
OUT12
OUT13
OUT14
OUT15
R0
R1
R2
R3
R4
R5
R6
R7
R8
R9
R10
R11
R12
R13
R14
R15
G0
G1
G2
G3
G4
G5
G6
G7
G8
G9
G10
G11
G12
G13
G14
G15
B0
B1
B2
B3
B4
B5
B6
B7
B8
B9
B10
B11
B12
B13
B14
B15
R[0..15]
G[0..15]
B[0..15]
TLC_SCLK
TLC_S1
TLC_S2
TLC_S3
+5V
R12
R16
R19
R21
1K
R14
R15
R18
R20
12K
Q3
Q4
Q5
Q6
IRF9540N
Q7
Q8
Q9
Q10
S8050
IN_0
IN_1
IN_2
IN_3
A0
A1
A2
A3
A[0..3]
J13
J14
J15
J16
J17
J18
J19
TP_TLC_SCLK
TP_TLC_S1
TP_TLC_S2
TP_TLC_S3
TP_TLC_XLAT
TP_TLC_BLANK
TP_TLC_GSCLK