**Frankfurt University**
**of Applied Sciences**

– Faculty of Computer Science and Engineering –

# Assessment of Grid-Forming Inverter Impact on Dynamic Stability and System Strength in Converter-Dominated Power Systems

Thesis submitted in order to obtain the academic degree

Master of Engineering (M. Eng.)

submitted on 01. May 2026 on

**Mario Alberto Tavera Leon**

Student ID: 1501319

| | | |
|---|---|---|
| First Supervisor | : | Prof. Dr.-Ing. Carolina Tranchita Rativa |
| Second Supervisor | : | Prof. Dr. Ing Sebastian Schäfer |

# Non-Disclosure Notice

This scientific thesis contains information of the company Rheinisch-Westfälisches Elektrizitätswerk AG. The disclosure or unauthorized use of this thesis as a whole or in parts is prohibited. The prohibition shall only apply to information pertaining to the company Rheinisch-Westfälisches Elektrizitätswerk AG. Any other exceptions require the written consent of Rheinisch-Westfälisches Elektrizitätswerk AG.

# Declaration

Hereby I assure that I have written the presented thesis independently and without any third party help and that I have not used any other tools or resources than the ones mentioned/referred to in the thesis.

Any parts of the thesis that have been taken from other published or yet unpublished works in terms of their wording or meaning are thoroughly marked with an indication of the source.

All figures in this thesis have been drawn by myself or are clearly attributed with a reference.

This work has not been published or presented to any other examination authority before. I am aware of the importance of the affidavit and the consequences under examination law as well as the criminal consequences of an incorrect or incomplete affidavit.

Frankfurt, 01. May 2026

*Your Signature*

**Mario Alberto Tavera Leon**

# Contents


**1 Introduction** **2**

**2 Literature Review** **4**

2.1 Inverter-Based Resources (IBR): GFL vs GFM . . . 4

2.1.1 Grid-Following Inverters . . . 4

2.1.2 Grid-Forming Inverters . . . 4

2.2 GFM Control Methods . . . 7

2.2.1 Droop Control . . . 7

2.2.2 Virtual Synchronous Machine . . . 8

2.2.3 Virtual Oscillator Control . . . 9

2.3 Power System Stability . . . 9

2.3.1 Categories of Stability . . . 10

2.4 RMS and EMT Approaches . . . 12

2.5 Frequency and Voltage Stability Indicators . . . 13

2.5.1 Frequency Stability Indicators . . . 14

2.5.2 Voltage Stability Indicators . . . 16

2.6 Grid Strength and Short-Circuit Ratio . . . 19

2.7 Benchmark Power-System Test Networks . . . 20

2.7.1 Red Equivalente Espanola (REE) . . . 20

2.7.2 IEEE-39 Bus System . . . 20

2.8 Research Gap and Motivation . . . 23

**3 Objectives** **24**

3.1 Research Question . . . 24

3.2 Scenarios . . . 24

**4 Developed Method** **25**

4.1 Method . . . 25

4.2 IEEE 39 bus system replacement . . . 25

**5 Evaluation der Methode** **26**

**6 Ergebnisse** **27**

**7 Zusammenfassung und Ausblick** **28**

**A Programmcode** **29**

**Bibliography** **32**

# Abstract

This is the abstract of the document, here the abstract will be provided
This is just a try to observe how does the document is being done

# Chapter 1

# Introduction

The global energy transition is driving society toward cleaner and more sustainable ways of producing electricity. This transformation has accelerated the deployment of renewable energy sources, most of which are connected to the grid through power electronic converters, commonly referred to as Inverter Based Resources (IBRs). Unlike conventional synchronous machines, IBRs lack the natural inertia and damping that arise from the big rotating masses of generators. As synchronous units are progressively being decommissioned, the power system experiences reduced inertia and weaker frequency stability. This shift towards power systems with high penetration of IBRs creates new challenges in maintaining dynamic stability, especially under large disturbances.

IBRs can be broadly categorized into Grid-Following (GFL) and Grid-Forming (GFM) inverters. Grid-Following inverters operate as controlled current sources that inject current based on an externally measured grid voltage. In contrast, Grid-Forming inverters behave as controlled voltage sources, capable of establishing their own voltage and frequency references. This fundamental difference enables GFM inverters to provide advanced functionalities such as islanded operation, black-start capability, and voltage and frequency support during disturbances. As a result, they are seen as a promising solution to enhance the stability of low-inertia systems. Among the technologies capable of providing GFM capability, Battery Energy Storage Systems (BESS) are particularly attractive. Their fast response and bidirectional power flow make them suitable for supporting the grid during transients while participating in energy arbitrage and ancillary service markets. As energy markets evolve to value flexibility and stability, understanding how BESS equipped with GFM control can contribute technically and economically becomes crucial. For RWE, many assets are connected at distribution system level, where the interaction between multiple IBRs and the grid can be complex. However, manufacturers often protect the internal control algorithms of their inverters, limiting transparency and making it challenging for developers to predict system behavior.

Therefore, it is important to understand how GFM parameters—such as virtual inertia, damping, and droop coefficients—affect system performance, and how these can be interpreted from available manufacturer data sheets to ensure appropriate equipment selection and sizing. This thesis aims to analyze the impact of Grid-Forming parameters on system stability under large disturbances using PowerFactory simulations at the distribution network level. Different park configurations—including standalone BESS and hybrid renewable plants—will be evaluated to determine the minimum share of GFM capacity required to ensure stable operation. The study focuses on system-level behavior and parameter sensitivity, not on designing or modifying inverter control loops. By doing so, it supports RWE in developing internal capability to assess GFM behavior and translate manufacturer information into actionable technical requirements. Managing the stability of future power systems requires addressing the growing share of generation from nontraditional sources, including renewable technologies such as solar or wind and energy storage systems like batteries. These resources not only exhibit variability due to their weather-dependent energy inputs but also span a wide range of capacities—from small residential rooftop installations of a few kilowatts to large utility-scale plants reaching hundreds or even thousands of megawatts. Moreover, they are integrated across multiple grid levels, connecting both within distribution networks and directly to high-voltage transmission systems.

The operation of future power networks must integrate both the inherent dynamics and control responses of traditional large-scale synchronous machines and those of emerging inverter-based generation technologies.

The thesis provides a quantitative estimate of the minimum GFM share required for acceptable dynamic performance across different grid strengths, it also provide

# Chapter 2

# Literature Review

## 2.1 Inverter-Based Resources (IBR): GFL vs GFM

The increasing penetration of inverter-based resources (IBRs), mainly photovoltaic and battery systems, has significantly changed the dynamic behaviour of modern power networks. As these resources interface through power-electronic converters and do not provide mechanical inertia, system frequency and voltage become more sensitive to disturbances, particularly in weak-grid conditions with low short-circuit ratio (SCR). This motivates the need for advanced converter control methods capable of contributing to system stability [25, 27].

Two main control paradigms exist: grid-following (GFL) and grid-forming (GFM) inverters. Their fundamental differences define how each device interacts with the grid and determines its ability to support voltage, frequency, and overall system strength.

### 2.1.1 Grid-Following Inverters

Most utility-scale PV and wind inverters operate under GFL control. These inverters behave as controlled current sources and synchronise to the grid using a phase-locked loop (PLL), which provides the voltage angle reference. Active and reactive power are regulated through outer power loops and a fast current controller using this PLL reference [25].

While GFL inverters are effective in delivering programmed power, their performance depends on the external grid establishing voltage and frequency. Under low SCR conditions, the PLL interacts with grid impedance, resulting in reduced stability margins, delays in reactive current injection, or oscillatory behaviour. These limitations become more relevant in highly converter-dominated systems, where the absence of synchronous machine inertia amplifies frequency deviations and weakens voltage regulation [27].

The detailed control block diagram in Fig. 2.2 illustrates the typical GFL architecture. Since GFL units depend on accurate grid measurements, their dynamic behaviour under disturbances is limited by PLL response time, current controller bandwidth, and the available grid strength.

### 2.1.2 Grid-Forming Inverters

GFM inverters operate fundamentally differently. Instead of relying on the grid to establish voltage and frequency, they behave as controlled voltage sources and generate their own internal voltage and frequency references without a PLL. This allows them to regulate frequency and voltage directly and provide synthetic inertia, damping, and fast fault response. Their behaviour is therefore more robust in weak-grid and low-inertia conditions [28, 33].

Figure 2.4 shows the behaviour of a GFM inverter during islanded operation, where the converter must regulate the voltage at the point of common coupling while supplying loads represented by an equivalent impedance.

Common GFM control strategies include droop control, virtual synchronous machine (VSM), and virtual oscillator control

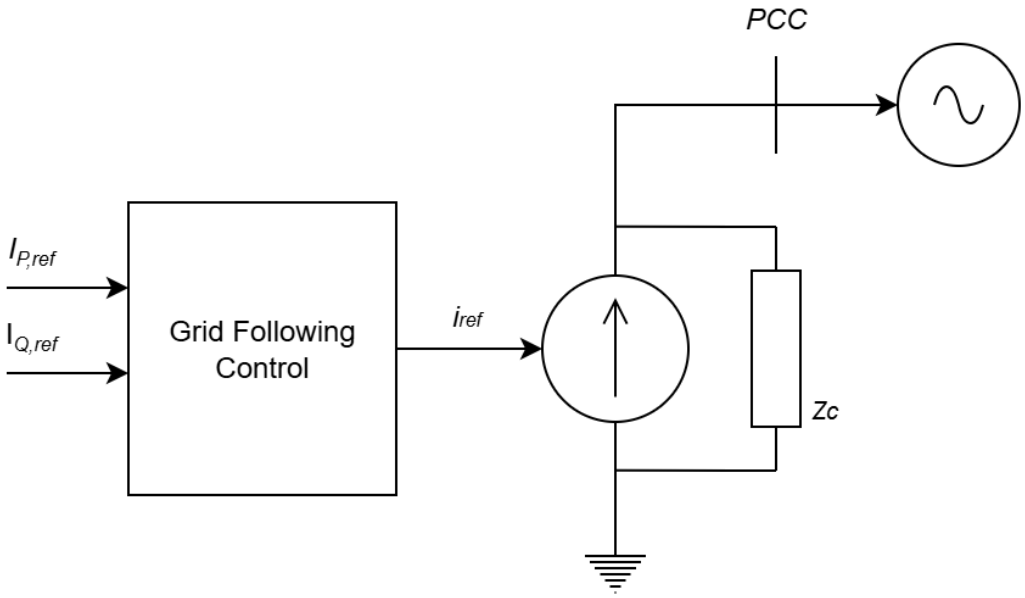


Figure 2.1: Grid-following inverter control structure [33]

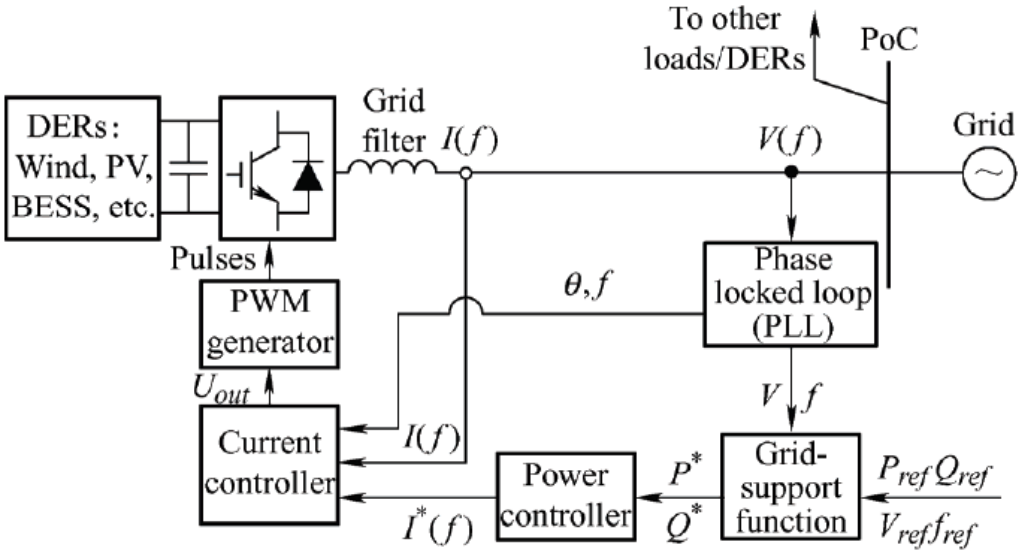


Figure 2.2: Detailed control blocks of a grid-following inverter [28]

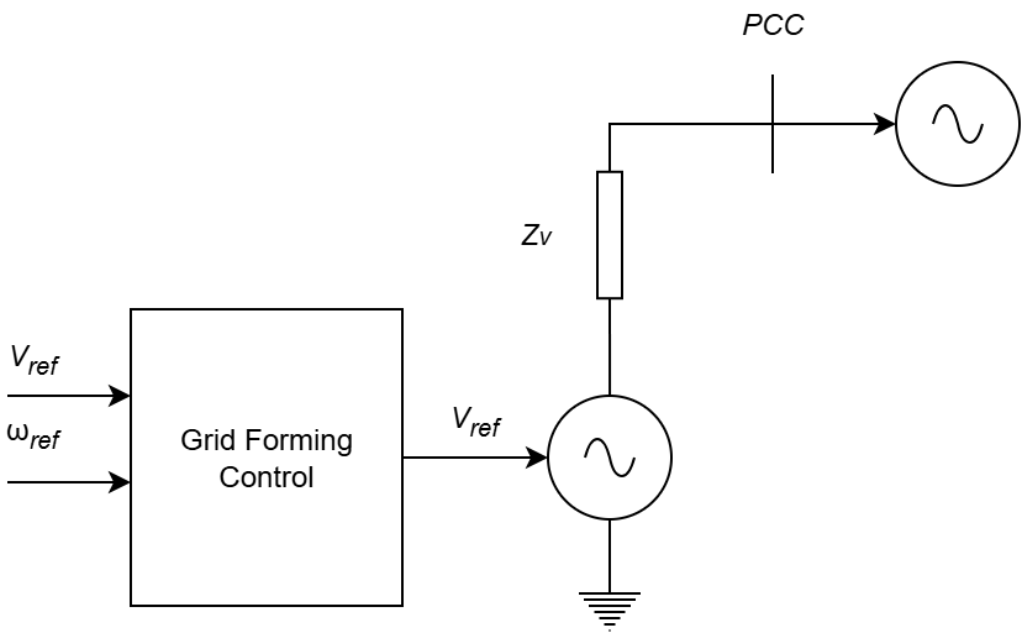


Figure 2.3: Grid-forming inverter control structure [33]

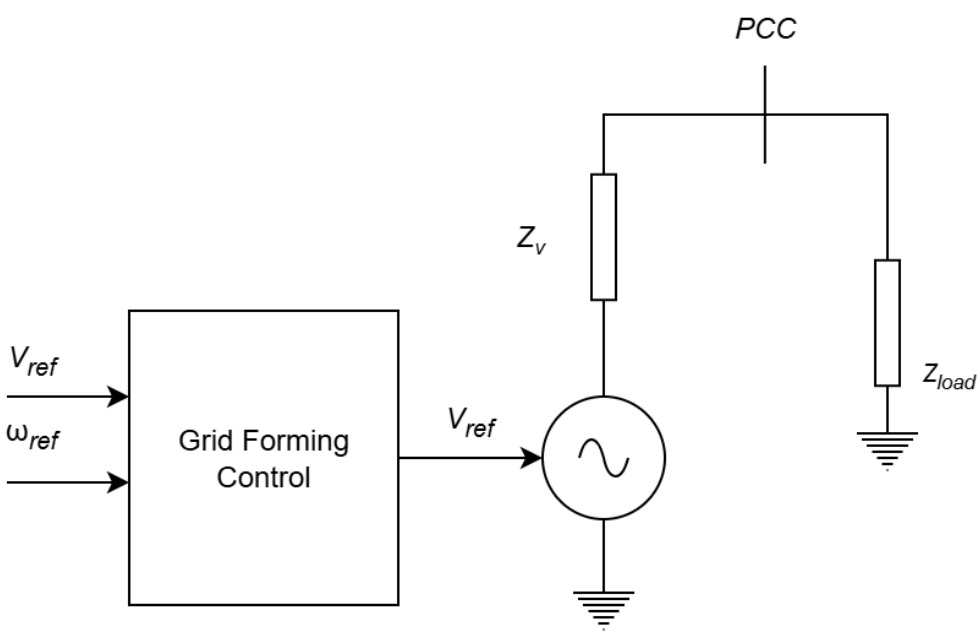


Figure 2.4: Grid-forming control structure during islanded operation [28]

(VOC). These methods aim to provide fast frequency support, synthetic inertia, voltage regulation, improved damping, black-start capability, and stable operation under low SCR. The detailed block structure is shown in Fig. 2.5.

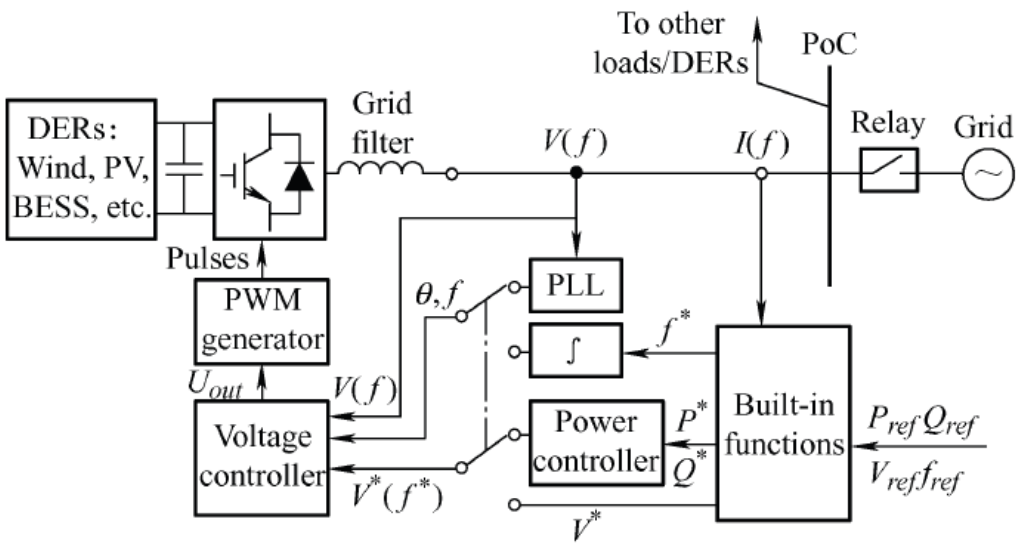


Figure 2.5: Detailed control blocks of a grid-forming inverter [28]

Overall, the distinction between GFL and GFM is essential for evaluating system stability in converter-dominated networks. GFL units depend on the grid's voltage and frequency, whereas GFMs can regulate these quantities directly. As a result, the sensitivity of GFM control parameters—virtual inertia, droop, and damping—to different SCR levels becomes a central aspect of the system's dynamic behaviour, forming the basis for the stability analysis conducted in this thesis.

## 2.2 GFM Control Methods

Distributed generators (DGs) are typically composed of a DC link, an input-side converter, and a grid-side DC/AC converter. While the input stage depends on the specific generation technology, the grid-side converter defines the dynamic interaction between the inverter and the electrical network.

Grid-forming (GFM) inverters autonomously regulate their terminal voltage and frequency, ensuring stable operation even under varying load conditions or fluctuations in generation, such as in photovoltaic or battery systems [34]. Their control framework is generally organised around three main objectives:

- **Power control:** Regulation of active and reactive power to maintain the balance between generation and demand.
- **Frequency regulation:** Adjustment of inverter output during frequency deviations to support frequency restoration.
- **Voltage control:** Reactive power modulation to support voltage stability during transients.

Regardless of the specific control strategy, GFM controllers must comply with grid-code requirements to guarantee stable operation during steady-state and dynamic events [30].

### 2.2.1 Droop Control

Droop control emulates the primary frequency regulation mechanism of synchronous machines. It introduces a proportional relationship between frequency deviation and active power, and between voltage deviation and reactive power [30]. By

using $P$–$f$ and $Q$–$V$ characteristics, multiple inverters can share load without communication, which makes the method robust and suitable for decentralised operation.

Although droop control can regulate voltage and frequency effectively, it does not reproduce the synchronous machine swing dynamics. As a consequence, conventional droop controllers do not inherently provide inertia support.

The droop dynamics used in GFM control are commonly expressed as [5]:

$$\begin{cases} \omega = \omega_{\text{ref}} + K_P(P_{\text{ref}} - P), \\ V = V_{\text{ref}} + K_Q(Q_{\text{ref}} - Q). \end{cases} \tag{2.1}$$

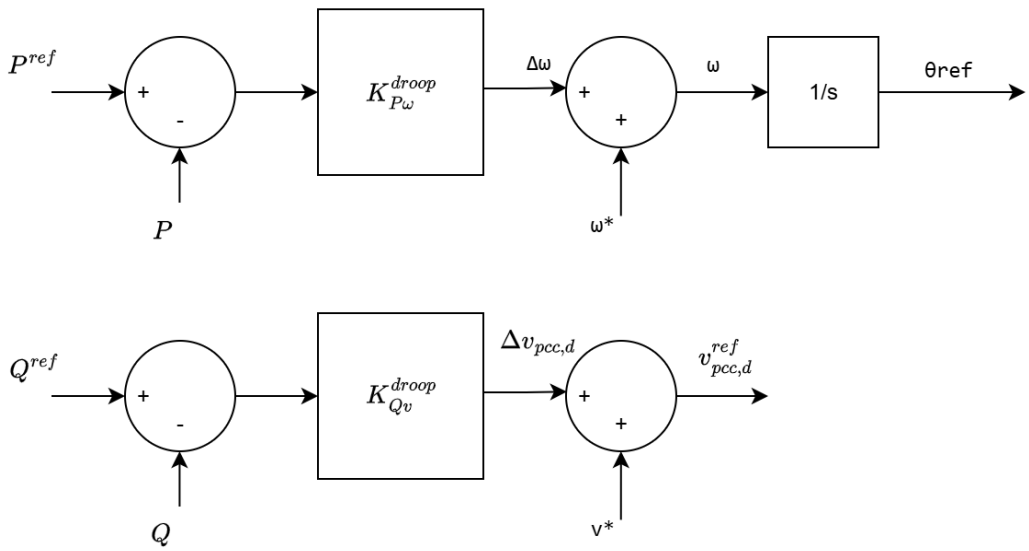


Figure 2.6: Block diagram of frequency and voltage droop control [30].

Here, $K_P$ and $K_Q$ denote the active- and reactive-power droop coefficients, while $P$, $Q$, $V$, and $\omega$ represent the measured quantities. This strategy enables decentralised and reliable load sharing, although its dynamic performance is limited by the absence of inertia emulation.

### 2.2.2 Virtual Synchronous Machine

The Virtual Synchronous Machine (VSM), also referred to as Virtual Synchronous Generator (VSG), aims to emulate the electromechanical behaviour of a synchronous machine. This includes reproducing the rotor dynamics described by the swing equation, which enables the inverter to provide virtual inertia, damping, and improved transient voltage and frequency stability.

A representative formulation of VSM behaviour is [5]:

$$\dot{\theta}^{ref} = \omega, \tag{2.2}$$

$$\dot{\omega} = \frac{1}{J\omega}(P^{ref} - P) + \frac{D_p}{J}(\omega^* - \omega), \tag{2.3}$$

where $J$ and $D_p$ denote the virtual inertia and damping, respectively. By replicating synchronous machine dynamics, VSM-based control avoids rapid variations in frequency and voltage during disturbances. However, tuning the inertia and damping parameters is more complex than in droop control, and improper tuning may affect stability [34].

The classical swing equation is given by [27]:

$$J\omega_0 \frac{d\omega_r}{dt} + D_p\omega_r = P_m - P_e. \tag{2.4}$$

A simplified transfer function representation is:

$$K_{\text{vsg}} = \frac{\Delta\omega}{\Delta P} = \frac{1}{(D_p + k_m)} \left( \frac{1}{\frac{J\omega_0}{D_p + k_m} s + 1} \right), \tag{2.5}$$

where $k_m$ is a gain selected according to the desired $P$–$\omega$ characteristic.

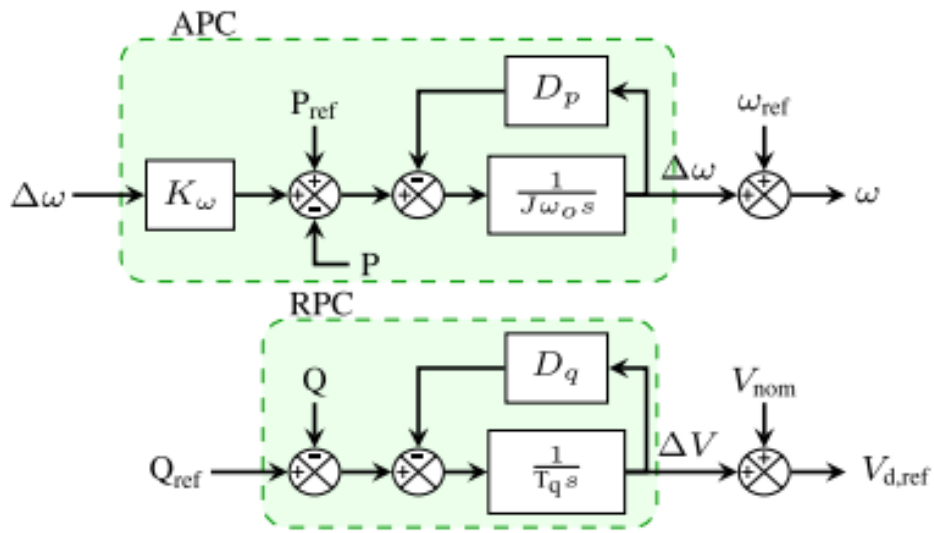


Figure 2.7: Swing-based virtual synchronous generator [27].

The ability to emulate synchronous machine inertia makes VSM-based control suitable for low-inertia and weak-grid systems, although the increased tuning complexity is a notable drawback.

### 2.2.3 Virtual Oscillator Control

Virtual Oscillator Control (VOC) synchronises multiple GFM inverters using oscillator dynamics instead of PLLs or explicit power calculations. The method uses an internal nonlinear oscillator that generates a reference waveform, allowing the inverter to naturally synchronize with other devices connected to the grid [31].

VOC operates directly in the time domain and therefore provides faster transient performance compared to droop control. It is particularly suitable for parallel operation of multiple inverters but is highly sensitive to parameter tuning and may exhibit a limited synchronization range [34].

In Fig. 2.8, $u(t)$ denotes the capacitor voltage of an LC oscillator. VOC uses the capacitor voltage as the modulation signal in the PWM process, enabling the inverter to behave similarly to a nonlinear electrical oscillator. This behaviour allows fast self-synchronisation without requiring power calculations.

Under steady-state conditions, VOC converges to droop-like behaviour. In transient conditions, its time-domain nature results in a faster and more stable response [26].

## 2.3 Power System Stability

Electric power systems are undergoing significant changes due to the increasing penetration of power-electronic-interfaced technologies. These developments have introduced new stability considerations, although the mathematical foundations remain consistent with general dynamic system theory [22].

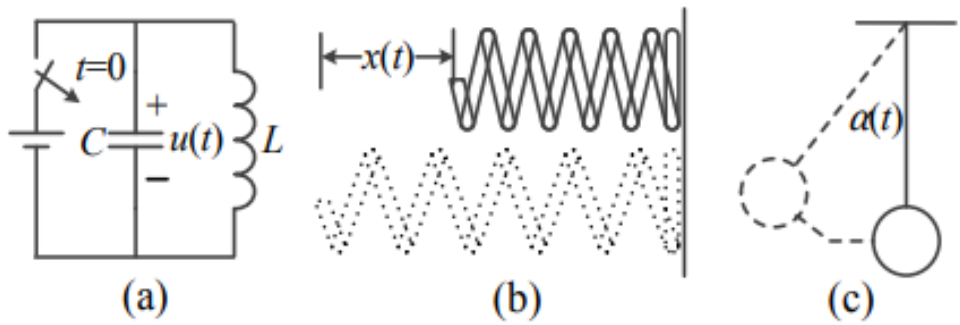


Figure 2.8: Virtual oscillator and virtual resonance generator models [31].

Historically, system dynamics were dominated by synchronous machines. Their inertia, electromechanical behaviour, and well-understood control characteristics provided predictable system responses. Modern power systems, however, incorporate large shares of inverter-based resources (IBRs)—including wind and photovoltaic plants, FACTS devices, HVDC links, and power-electronic loads such as electric vehicles and heat pumps. These elements modify the overall stability landscape by introducing fast dynamics, reduced inertia, and new types of interactions between controllers and the grid [16].

Power system stability is defined as the ability of the electrical network to return to an acceptable operating equilibrium after a disturbance, with system variables remaining within permissible limits and the network remaining intact [22]. Disturbances range from continuous small load variations to severe events such as faults or generator outages. Since it is not feasible to guarantee stability for all possible scenarios, system operators rely on contingency-based analyses, prioritising the most probable or most critical events.

The increasing share of IBRs introduces additional challenges, such as reduced short-circuit current, interactions between converter control loops, and lower system inertia. These aspects can affect frequency and voltage stability, especially in weak-grid conditions where electromagnetic and control interactions become more pronounced [16].

Different types of disturbances activate system components with distinct response times. Figure 2.9 illustrates the typical time scales of relevant dynamic phenomena.

IBRs exhibit significantly faster dynamic responses than synchronous machines. While electromechanical time-scale analysis allows model simplifications suitable for traditional stability studies, fast inverter dynamics—particularly those related to internal control loops or switching—are not fully captured using simplified phasor-domain models. This motivates the inclusion of faster time scales when assessing systems with high IBR penetration [16].

Modern power systems can thus be regarded as high-order, multivariable dynamic processes in which stability depends on operating conditions, network topology, and the type and magnitude of the disturbance [22]. Figure 2.10 presents the standard classification of stability phenomena.

Classifying stability phenomena enables the use of appropriate analytical methods and modelling approaches for each category [16].

### 2.3.1 Categories of Stability

1. **Rotor Angle Stability:** Ability of interconnected synchronous machines to remain in synchronism during normal operation and following disturbances.

2. **Voltage Stability:** Ability of the system to maintain acceptable voltage levels after a disturbance. It depends on generation and transmission capability, reactive power availability, and the limits of maximum power transfer.

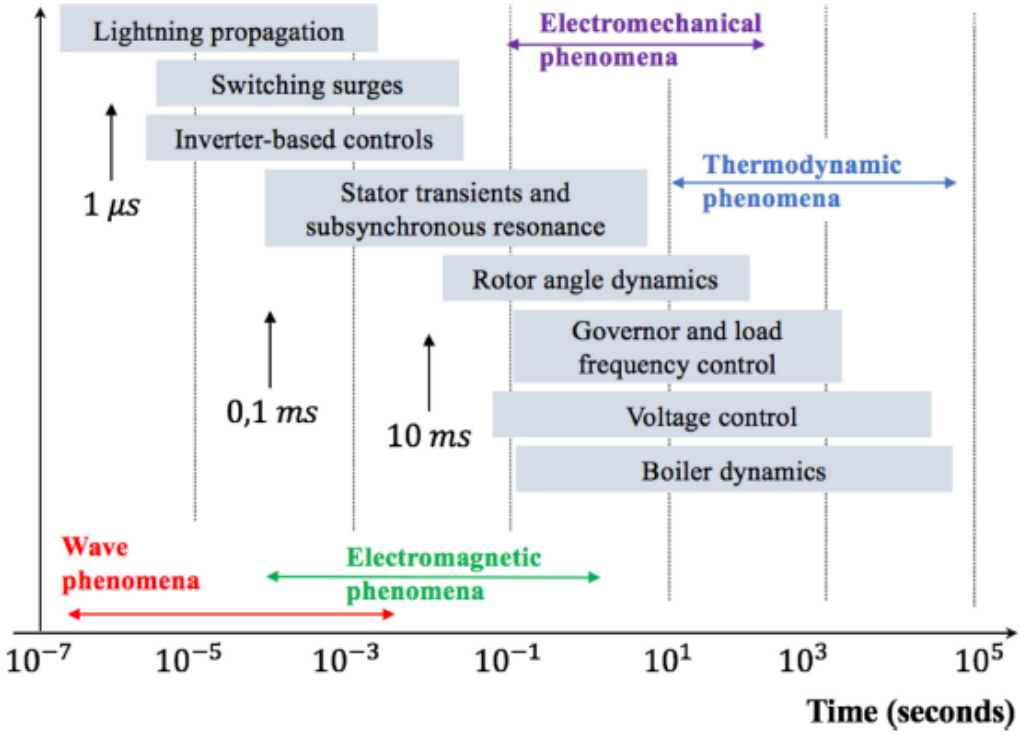


Figure 2.9: Power system time scales [16].

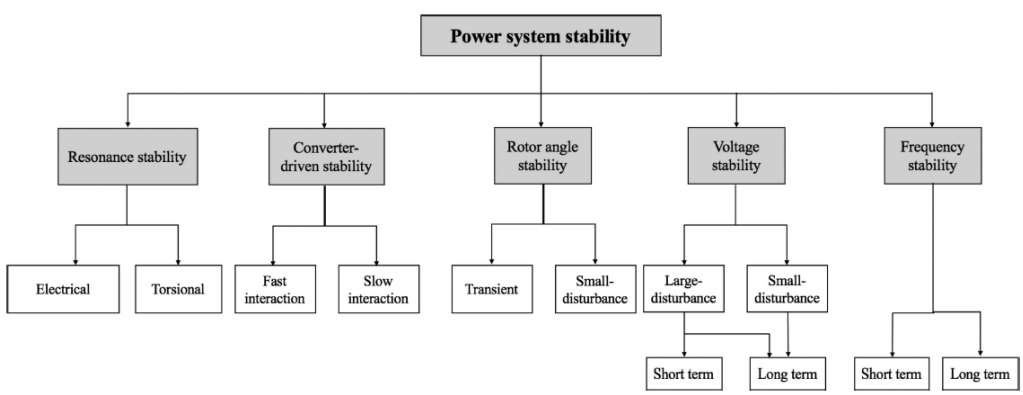


Figure 2.10: Classification of power system stability [16].

3. **Frequency Stability:** Ability of the system to maintain or restore nominal frequency following large imbalances between load and generation. Instability may manifest as sustained frequency swings or widespread tripping of units.
4. **Resonance Stability:** Occurs when insufficient damping leads to energy exchange in oscillatory modes, resulting in magnified voltage, current, or torque oscillations.
5. **Converter-Driven Stability (CDS):** Stability associated with interactions between converter control systems and the grid. These phenomena span a wide frequency range and are increasingly relevant in power systems dominated by power-electronic devices.

#### 2.3.1.1 Converter-Driven Stability

High penetration of converter-interfaced renewable generation has introduced new dynamic interactions not present in synchronous machine-dominated grids. Converters lack mechanical inertia and rely entirely on fast digital control loops, making system behaviour strongly dependent on controller tuning and grid strength. As IBR penetration increases, these interactions may lead to oscillatory or poorly damped behaviour across a broad frequency spectrum—including sub-synchronous oscillations, electromechanical modes, and high-frequency resonances. Real-world incidents have shown that weak-grid conditions can significantly reduce system damping or even trigger instability [23].

Converter-driven stability encompasses dynamic phenomena influenced or caused by converters and their internal controls. Slow interactions typically arise below 10 Hz and are linked to outer control loops or system-level dynamics. Fast interactions originate from inner control loops and power-electronic behaviour, covering tens to hundreds of hertz or more. These frequency ranges are illustrated in Fig. 2.11 [10].

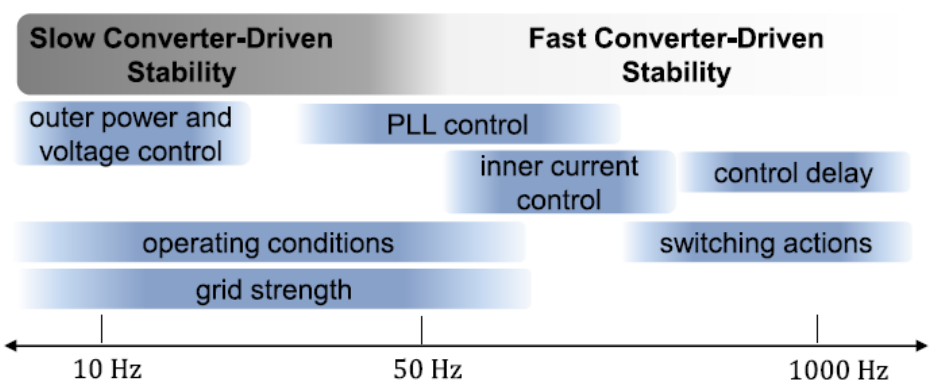


Figure 2.11: Frequency range of converter-driven stability [10].

The analysis of fast converter-driven interactions typically requires EMT models, which represent detailed electromagnetic and control dynamics. However, EMT simulations require very small time steps, resulting in high computational effort. For larger systems, they may become impractical or computationally prohibitive [10].

Overall, the literature highlights that increasing IBR penetration necessitates advanced and scalable modelling approaches to capture converter-grid interactions. While EMT simulations provide valuable insights, they are difficult to apply at large scale, motivating the development of efficient methods capable of representing converter-driven dynamics in future power systems.

## 2.4 RMS and EMT Approaches

Transient stability analysis evaluates the nonlinear dynamic response of a power system subjected to large disturbances, such as short circuits or the sudden loss of generation. In classical studies, the faulted element is cleared by protection systems, and the post-fault dynamics determine whether the system remains stable [21].

Phasor Domain Transient (PDT) or RMS simulations represent voltages and currents as complex phasors—magnitudes and angles—rather than instantaneous waveforms. Because three-phase steady-state quantities can be related to their phasor representation, RMS simulations avoid solving electromagnetic phenomena explicitly, resulting in high computational efficiency. For decades, this approach has been the standard for transient stability studies due to its speed and suitability for large-scale system analysis and operator decision support.

However, RMS models rely on quasi–steady-state assumptions. They capture only fundamental-frequency electromechanical behaviour and neglect fast electromagnetic dynamics ("network transients"), limiting their ability to represent interactions driven by power electronic converters [4].

Electromagnetic transient (EMT) programs provide a more detailed representation by solving instantaneous differential equations, typically using Dommel's algorithm. EMT simulations capture both electromechanical and electromagnetic energy exchanges in network components, including the dynamics of inductances, capacitances, controllers, and switching elements [3]. This makes EMT indispensable for analysing fast converter-driven interactions, resonance phenomena, and weak-grid behaviour—topics increasingly relevant in systems with high IBR penetration.

Electromagnetic transients arise from interactions between electric and magnetic fields and evolve on sub-millisecond time scales. Electromechanical transients, in contrast, originate from the dynamics of synchronous machine rotors and operate over hundreds of milliseconds or seconds. An intermediate region exists where both phenomena interact and may require combined modelling approaches [3]. In practice, transient waveforms consist of oscillatory components associated with different natural frequencies, and selecting the appropriate modelling domain depends on the time-scale of interest.

Figure 2.12 summarises the frequency ranges covered by RMS and EMT approaches. RMS studies are suitable for electromechanical stability assessment, while EMT simulations are required to capture fast converter and controller dynamics—particularly relevant for weak grids and grid-forming inverter analysis.

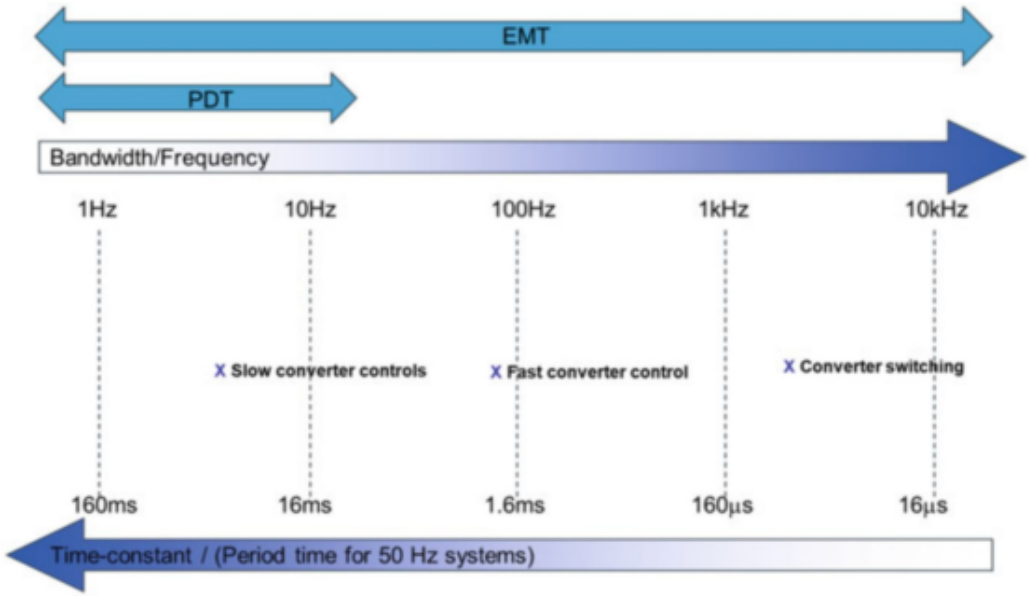


Figure 2.12: Frequency range of coverage for EMT and PDT studies [4].

## 2.5 Frequency and Voltage Stability Indicators

Power system stability analysis requires quantitative measures that describe how the system reacts to disturbances and how fast it returns to an acceptable operating point. Modern converter-dominated grids exhibit faster dynamics and reduced inertia, which makes stability indicators essential for comparing control strategies, evaluating inverter performance, and assessing system strength. The indicators presented in this section are widely used in international standards (IEEE,

ENTSO-E), system operator guidelines, and the scientific literature.

### 2.5.1 Frequency Stability Indicators

Frequency stability refers to the ability of a power system to maintain its nominal frequency following a sudden disturbance such as a generation outage or a load change. In traditional systems, the electromechanical response of synchronous machines limits the initial frequency deviation through inertia, while primary frequency control determines the steady-state deviation [21]. In converter-dominated systems, reduced inertia and faster dynamics increase the importance of suitable frequency indicators for stability assessment, inverter control design, and compliance with operational requirements.

#### 2.5.1.1 Theoretical Background

System frequency is determined by the balance between mechanical input power and electrical output power. A sudden load increase causes electrical power to exceed mechanical input, leading to a frequency drop governed by the swing equation:

$$2H\frac{df}{dt} = P_m - P_e, \tag{2.6}$$

where $H$ is the inertia constant, $P_m$ the mechanical power, and $P_e$ the electrical power.

As frequency declines, the governor responds according to its droop characteristic:

$$\Delta P_m = -\frac{1}{R}\Delta f, \tag{2.7}$$

with $R$ the generator droop. This drives the frequency towards a new equilibrium that generally differs from nominal. The resulting steady-state deviation is

$$\Delta f_{\mathrm{ss}} = -\frac{\Delta P_L}{\frac{1}{R} + D}, \tag{2.8}$$

where $\Delta P_L$ is the load change and $D$ the load-damping coefficient. This behaviour characterises the inertial dip, frequency nadir, and primary frequency control response.

Figure 2.13 illustrates the characteristic inertial frequency dip, the nadir, and the subsequent primary control recovery governed by governor droop, as well as the new steady-state frequency value.

#### 2.5.1.2 Rate of Change of Frequency (RoCoF)

The rate of change of frequency (RoCoF) quantifies the initial speed of frequency deviation following a disturbance and is a key indicator of system robustness. Immediately after the event, it can be approximated by [29]:

$$\mathsf{RoCoF}\big|_{t=0^+} = \frac{\Delta P_{\mathrm{Imbalance}}}{P_{\mathrm{LOAD}}} \cdot \frac{f_0}{2H}, \tag{2.9}$$

where $\Delta P_{\mathrm{Imbalance}}$ is the generation–load imbalance, $P_{\mathrm{LOAD}}$ the system load, and $f_0$ the nominal frequency.

ENTSO-E regards RoCoF withstand capability as a fundamental operational requirement and notes that high RoCoF values may lead to generator tripping, loss of synchronism, or malfunction of protection devices [29]. Typical limits in Continental Europe range from $0.5$ to $2\,\mathrm{Hz/s}$ depending on system conditions [15].

The minimum system inertia needed to contain RoCoF within a specified limit is

$$T_{N,\min} = \frac{\Delta P_{\mathrm{Imbalance}}}{P_{\mathrm{Load}}} \cdot \frac{f_0}{\mathsf{RoCoF}_{\max}}, \tag{2.10}$$

where $T_N$ is the equivalent system inertia constant.

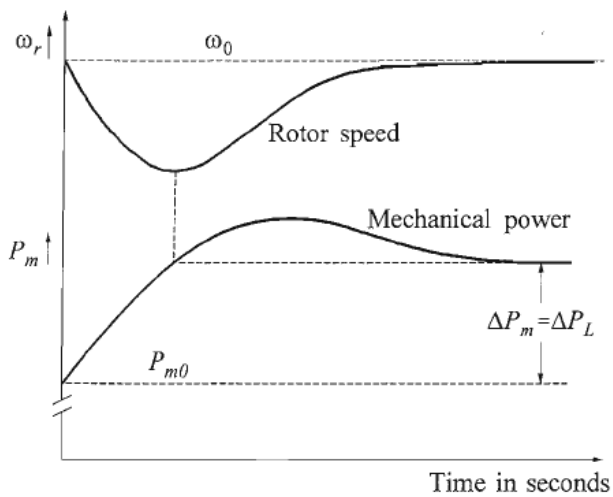


Figure 2.13: Frequency response of a generating unit [21].

#### 2.5.1.3 Frequency Nadir

The frequency nadir is the minimum frequency reached after a disturbance and represents the balance between inertial response and primary frequency control. It is typically reached after the initial inertial frequency decline and before governor action has fully developed [21].

In practice, both RoCoF and nadir are defined and constrained by grid codes and system operator requirements. For example, the Irish Grid Code defines the nadir as the minimum frequency occurring within a 5–15 s window following an event; if the absolute minimum lies outside this interval, the nadir is taken as the lowest value within that window [11]. ENTSO-E focuses on maintaining RoCoF withstand capabilities, typically between $0.5$ and $1\,\mathrm{Hz/s}$, while nadir requirements are indirectly linked to the avoidance of under-frequency load shedding [29]. VDE-FNN requires generating units in Germany to remain connected for RoCoF values up to approximately $2$–$2.5\,\mathrm{Hz/s}$, with nadir limits coordinated with national UFLS thresholds [32]. In Great Britain, generators must withstand RoCoF levels up to $\pm 1\,\mathrm{Hz/s}$ for at least one second [24], whereas in low-inertia systems such as South Australia, AEMO specifies RoCoF withstand levels up to $4\,\mathrm{Hz/s}$, with nadir evaluated against frequency operating standards [1]. These different definitions illustrate the diversity of frequency stability criteria worldwide and highlight the operational relevance of nadir and RoCoF in low-inertia grids.

#### 2.5.1.4 Steady-State Frequency Deviation

Following primary frequency control, the system settles at a new equilibrium frequency that depends on generator droop and load damping. The steady-state deviation is

$$\Delta f_{\mathrm{ss}} = -\frac{\Delta P_L}{\frac{1}{R} + D}. \tag{2.11}$$

This indicator is used to assess compliance with allowable frequency ranges (for instance, 49.8–50.2 Hz in Continental Europe) and to evaluate the adequacy of primary control reserves.

#### 2.5.1.5 Aggregate Frequency: Centre of Inertia (COI)

The aggregate frequency of a multi-machine system is often represented using the Centre of Inertia (COI), which provides an inertia-weighted average frequency. The COI rotor angle is defined as

$$\delta_{\mathrm{COI}} = \frac{1}{H_T} \sum_{i=1}^{N} H_i \delta_i, \tag{2.12}$$

where $H_i$ and $\delta_i$ are the inertia constant and rotor angle of generator $i$, and $H_T = \sum_{i=1}^{N} H_i$.

When nominal generator powers $S_{n,i}$ are included, the COI angle becomes

$$\delta_{\mathrm{COI},S_n} = \frac{\sum_{i=1}^{N} H_i \delta_i S_{n,i}}{\sum_{i=1}^{N} H_i S_{n,i}}, \tag{2.13}$$

and the corresponding COI frequency is

$$f_{\mathrm{COI},S_n} = \frac{\sum_{i=1}^{N} H_i f_i S_{n,i}}{\sum_{i=1}^{N} H_i S_{n,i}}. \tag{2.14}$$

The COI representation simplifies the analysis of aggregate frequency behaviour, especially under large disturbances, and is useful for comparing the impact of different inertia levels and control strategies.

Overall, RoCoF, nadir, steady-state deviation, and COI frequency are key quantitative measures used to evaluate frequency stability in modern power systems and are central to analysing the impact of reduced inertia and high renewable penetration.

### 2.5.2 Voltage Stability Indicators

#### 2.5.2.1 Theoretical Background

Voltage stability refers to the ability of a power system to maintain acceptable voltages at all buses under normal operating conditions and following disturbances. Its underlying cause is the inability of the system to supply the reactive power demanded by loads and the network [21]. Voltage stability phenomena are typically classified into large-disturbance and small-disturbance categories. Large-disturbance voltage stability concerns the system response to major events, such as faults or loss of generation, and is assessed using nonlinear time-domain simulations over short- or long-term time frames. Small-disturbance voltage stability focuses on the response to small perturbations around an operating point and can be analysed using steady-state or linearised dynamic methods [21].

In conventional grids, long transmission distances and high network impedances contribute to voltage instability by limiting reactive power transfer and increasing voltage sensitivity [14]. Additional influencing factors include generator reactive power limits, load characteristics, reactive compensation devices, and the action of voltage control equipment such as under-load tap changers [21].

The fundamental mechanisms of voltage stability can be illustrated using a simple radial system composed of a voltage source, a transmission line, and a load. The line impedance determines the voltage drop and the maximum transferable active power. As load increases, the receiving-end power initially rises and eventually reaches a maximum, beyond which no high-voltage equilibrium exists [21]. This defines the classical $P$–$V$ curve, where the nose point marks the boundary between stable and unstable operation. Load behaviour plays a critical role: constant-power loads and induction motors increase current and reactive power demand during voltage dips, accelerating the transition towards instability. These effects shape the characteristic $P$–$V$ and $Q$–$V$ curves and explain why weak grids—characterised by high impedance or low short-circuit ratio (SCR)—exhibit steep voltage sensitivities and reduced stability margins. In converter-dominated systems, grid-forming inverters assume the voltage-support role; their reactive current limits and control dynamics therefore determine short-term voltage recovery following disturbances.

Voltage collapse refers to the progressive and uncontrollable decline of bus voltages caused by the inability of the power system to meet reactive power demand [21].

Voltage stability can be interpreted using the classical $P$–$V$ and $Q$–$V$ characteristics. The $P$–$V$ curve represents the receiving-end voltage as a function of active power transfer and exhibits a maximum power point (nose point) beyond which no high-voltage equilibrium exists. The upper branch corresponds to stable operation, whereas the lower branch indicates voltage instability. The $Q$–$V$ curve expresses the steady-state relationship between reactive power injection and bus voltage. Its slope, often referred to as $V$–$Q$ sensitivity, provides a measure of the ability of the system to support voltage via reactive power. Steep negative slopes indicate weak-grid conditions and reduced voltage stability margins. These characteristics form the theoretical basis for the voltage indicators used in this thesis.

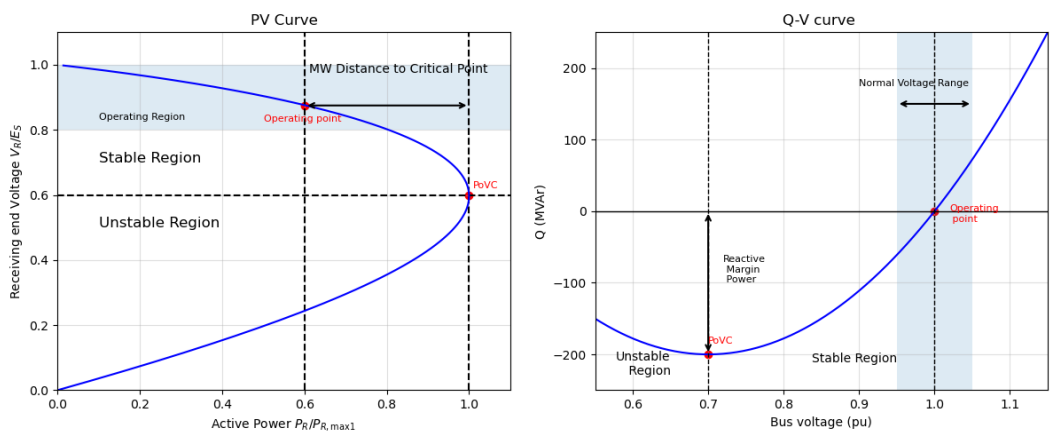


Figure 2.14: PV and QV curves.

#### 2.5.2.2 Voltage Magnitude Deviation

The voltage magnitude deviation quantifies how far a bus voltage deviates from its nominal or pre-disturbance value. It is commonly used in short-term voltage stability assessment [21, 2]. Many grid codes specify allowable steady-state ranges, often within $0.9$–$1.1\,\mathrm{pu}$.

$$\Delta V_i(t) = V_i(t) - V_{i,0}, \tag{2.15}$$

where $V_{i,0}$ is the pre-fault voltage (typically close to $1\,\mathrm{pu}$). The maximum absolute deviation over the simulation window is

$$\Delta V_{i,\max} = \max_t |\Delta V_i(t)|\,. \tag{2.16}$$

Typical grid codes restrict steady-state deviations to a prescribed band around nominal voltage [7].

#### 2.5.2.3 Post-Fault Voltage Dip

The post-fault voltage dip (or sag) is the minimum RMS voltage reached during and immediately after a disturbance. It is directly related to low-voltage ride-through (LVRT) requirements for inverter-based resources in modern grid codes and IEEE standards [18, 19].

From the simulated RMS voltage trace $V(t)$ at the bus of interest, the minimum value in a given time interval $[t_{\mathrm{fault}}, t_{\mathrm{end}}]$ is

$$V_{\min} = \min_{t \in [t_{\mathrm{fault}},\, t_{\mathrm{end}}]} V(t). \tag{2.17}$$

The relative depth of the dip with respect to the pre-fault voltage $V_0$ is

$$\text{Dip} = \frac{V_0 - V_{\min}}{V_0} \cdot 100\%. \tag{2.18}$$

These quantities are compared against the admissible voltage profiles prescribed in [7, 19].

#### 2.5.2.4 Voltage Recovery Time

Voltage recovery time characterises how fast the bus voltage returns close to its pre-disturbance level after fault clearing, or to a predefined band around this pre-disturbance point. It is commonly used in short-term voltage stability assessment and reflects the reactive power support capability of the system [21, 13].

Given a tolerance band $\epsilon$ around the pre-fault voltage $V_0$ (for example $\epsilon = 0.05\,\mathrm{pu}$), the recovery time is defined as

$$t_{\mathrm{rec}} = \min\left\{t > t_{\mathrm{clear}} \;\middle|\; |V(t) - V_0| \leq \epsilon \text{ and } |V(\tau) - V_0| \leq \epsilon \;\forall \tau \geq t\right\}. \tag{2.19}$$

The indicator reported in this thesis is the elapsed time $t_{\mathrm{rec}} - t_{\mathrm{clear}}$.

#### 2.5.2.5 Voltage Oscillation Damping Ratio

The damping ratio characterises how fast post-disturbance voltage oscillations decay. It is particularly relevant in weak grids, where low electromechanical damping can lead to sustained oscillations even in the absence of synchronous machines [21, 20]. After a disturbance, the bus voltage may exhibit decaying oscillations whose damping depends on system strength and control design [21]. A convenient scalar indicator is the damping ratio of the dominant mode, estimated from successive peaks of the voltage waveform.

Let $x_1$ and $x_2$ denote two consecutive peaks (for example the first and second maxima of the oscillatory component). The logarithmic decrement is

$$\delta = \ln\left(\frac{x_1}{x_2}\right). \tag{2.20}$$

Assuming underdamped oscillations, the corresponding damping ratio is approximated by

$$\zeta = \frac{\delta}{\sqrt{4\pi^2 + \delta^2}}. \tag{2.21}$$

In this work, this procedure is applied to the voltage at the PCC to compare the effect of different GFM parameter settings and short-circuit ratios.

#### 2.5.2.6 Voltage Overshoot

Voltage overshoot measures how much the bus voltage exceeds its nominal or pre-disturbance value during the post-fault recovery. Excessive overshoot may indicate aggressive reactive power control or poorly tuned grid-forming parameters and must remain within admissible overvoltage limits [2, 19].

The maximum RMS voltage in a selected post-fault interval $[t_{\mathrm{clear}}, t_{\mathrm{end}}]$ is

$$V_{\max} = \max_{t \in [t_{\mathrm{clear}},\, t_{\mathrm{end}}]} V(t), \tag{2.22}$$

and the relative overshoot with respect to $V_0$ is

$$\mathrm{OS} = \frac{V_{\max} - V_0}{V_0} \cdot 100\%. \tag{2.23}$$

Both $V_{\max}$ and OS are evaluated at the PCC for the different GFM parameter sets.

#### 2.5.2.7 V–Q Sensitivity

The $V$–$Q$ sensitivity quantifies the change of steady-state voltage at a bus with respect to small variations of reactive power injection. It is a classical indicator of proximity to voltage collapse and is closely related to the slope of the $Q$–$V$ curve [21, 13].

Formally, the local sensitivity at the operating point is

$$\mathrm{Slope}_{VQ} = \frac{\partial V}{\partial Q}. \tag{2.24}$$

In practice, it is estimated numerically by perturbing the reactive power injection by a small $\Delta Q$ and resolving the power flow:

$$\mathrm{Slope}_{VQ} \approx \frac{V(Q + \Delta Q) - V(Q)}{\Delta Q}. \tag{2.25}$$

The voltage stability limit is reached when the slope of the $Q$–$V$ curve becomes zero,

$$\frac{\partial V}{\partial Q} = 0, \tag{2.26}$$

beyond which no stable operating point exists for increasing reactive demand [21].

#### 2.5.2.8 Critical Clearing Time

The critical clearing time (CCT) is a classical transient stability indicator that represents the maximum allowable fault duration after which the system can still return to a stable post-fault operating point. If the fault is cleared later than the CCT, the system loses synchronism and voltage or angle instability occurs [21, 2].

Let $t_{\mathrm{fault}}$ denote the instant when the disturbance is applied and $t_{\mathrm{clear}}$ the fault clearing time. The CCT is defined as

$$\mathrm{CCT} = \max\left\{t_{\mathrm{clear}} - t_{\mathrm{fault}} \;\middle|\; \text{system remains stable after clearing}\right\}. \tag{2.27}$$

For a simple generator, stability can be assessed via the post-fault evolution of the power angle $\delta(t)$ or other relevant state variables. If $\delta(t)$ remains bounded and converges to a new equilibrium, the clearing time is considered stable; otherwise, instability is detected. Mathematically,

$$\text{Stable} \iff \lim_{t\to\infty} \delta(t) = \delta_{\mathrm{eq}}, \tag{2.28}$$

whereas divergence,

$$\text{Unstable} \iff \delta(t) \to \infty \text{ or oscillations grow unbounded}, \tag{2.29}$$

indicates loss of synchronism [21].

## 2.6 Grid Strength and Short-Circuit Ratio

Grid strength is a fundamental concept in power system stability analysis and describes the ability of a network to maintain acceptable voltage and frequency conditions under disturbances. According to IEEE, grid strength can be quantified using the short-circuit power or the short-circuit ratio (SCR), defined as the ratio between the short-circuit power at the point of interconnection and the rated power of the connected inverter-based resource [19]:

$$SCR = \frac{S_{SC}}{P_{\mathrm{rated}}}. \tag{2.30}$$

CIGRÉ refines this concept by classifying grids as strong ($SCR > 10$), weak ($SCR < 5$), and very weak ($SCR < 3$), and introduces the effective SCR (ESCR) to account for reactive compensation devices [6]. Classical references such as Kundur and Anderson & Fouad do not define SCR explicitly for converters, but they provide the theoretical basis for electrical stiffness, voltage sensitivity, and short-circuit strength as key determinants of system stability [21, 2].

System operators increasingly use SCR as a practical stability metric. AEMO considers $SCR < 3$ critical for grid-following inverters, ERCOT specifies minimum ESCR levels for HVDC and wind integration, and ENTSO-E associates low SCR conditions with an increased risk of oscillations, FRT failures, PLL instability, and poor voltage regulation [8, 12, 17]. In converter-dominated systems, SCR is therefore particularly relevant, since weak grids amplify the sensitivity of dynamic behaviour to control parameters such as virtual inertia, damping, and droop gains, directly influencing the performance of grid-forming inverters in both RMS and EMT simulations.

The main quantities used to characterise grid strength are:

$$S_{SC} = \sqrt{3}\, V_{\mathrm{nom}}\, I_{SC}, \tag{2.31}$$

$$Z_{\mathrm{th}} = \frac{V_{\mathrm{nom}}^2}{S_{SC}}, \tag{2.32}$$

$$ESCR = \frac{S_{SC} - Q_{\mathrm{comp}}}{P_{\mathrm{rated}}}. \tag{2.33}$$

Here, $S_{SC}$ is the short-circuit power at the point of interconnection, obtained from the nominal voltage $V_{\mathrm{nom}}$ and the short-circuit current $I_{SC}$ of a fault study. The equivalent Thevenin impedance $Z_{\mathrm{th}}$ represents the electrical stiffness of the grid as "seen" from the connection point. In systems with shunt reactive compensation $Q_{\mathrm{comp}}$, the effective SCR (ESCR) provides a corrected measure by subtracting the contribution of capacitive reactive power. These relationships form the quantitative basis used in this thesis to classify grids as strong, weak, or very weak and to analyse the impact of GFM control parameters across different SCR levels.

## 2.7 Benchmark Power-System Test Networks

### 2.7.1 Red Equivalente Espanola (REE)

### 2.7.2 IEEE-39 Bus System

The IEEE 39-bus New England test system consists of 39 buses, 10 generators, 19 loads, 34 transmission lines, and 12 transformers. The system operates at a nominal frequency of 60 Hz and a nominal transmission voltage level of 345 kV [9].

Although the nominal system voltage is 345 kV, several buses are modeled at different voltage levels in the DIgSILENT PowerFactory representation. In particular, Bus 12 operates at 138 kV, Bus 20 at 230 kV, and Buses 30 through 38 at 16.5 kV. The system does not include shunt compensation devices such as capacitors or reactors. Generator G02 serves as the slack machine of the network.

The load demand of the system is summarized in Table 2.2. According to the PowerFactory documentation, the total active power generation amounts to 6140.81 MW, while the total reactive power generated by the system is 1250.37 MVAr. The connected loads account for 6097.1 MW of active power and 1408.9 MVAr of reactive power consumption. The resulting mismatch between generation and demand is primarily attributed to transmission losses and reactive power effects associated with the long-distance transmission lines present in the network.

All generating units are modeled using the default PowerFactory settings and include their corresponding subtransient and zero-sequence parameters. The inertia constants of the ten synchronous generators represented in the system are summarized in Table 2.3.

Table 2.1: Generator dispatch [9]

| Generator | Bus | Bus Type | P (MW) | V (p.u.) |
|---|---|---|---|---|
| G01 | Bus 39 | PV | 1000.0 | 1.0300 |
| G02 | Bus 31 | Slack | N.A. | 0.9820 |
| G03 | Bus 32 | PV | 650.0 | 0.9831 |
| G04 | Bus 33 | PV | 632.0 | 0.9972 |
| G05 | Bus 34 | PV | 508.0 | 1.0123 |
| G06 | Bus 35 | PV | 650.0 | 1.0493 |
| G07 | Bus 36 | PV | 560.0 | 1.0635 |
| G08 | Bus 37 | PV | 540.0 | 1.0278 |
| G09 | Bus 38 | PV | 830.0 | 1.0265 |
| G10 | Bus 30 | PV | 250.0 | 1.0475 |

Table 2.2: Load demand [9]

| Load | Bus | P (MW) | Q (MVAR) |
|---|---|---|---|
| Load 03 | Bus 03 | 322.0 | 2.4 |
| Load 04 | Bus 04 | 500.0 | 184.0 |
| Load 07 | Bus 07 | 233.8 | 84.0 |
| Load 08 | Bus 08 | 522.0 | 176.0 |
| Load 12 | Bus 12 | 75.0 | 88.0 |
| Load 15 | Bus 15 | 320.0 | 153.0 |
| Load 16 | Bus 16 | 329.0 | 32.3 |
| Load 18 | Bus 18 | 158.0 | 30.0 |
| Load 20 | Bus 20 | 628.0 | 103.0 |
| Load 21 | Bus 21 | 274.0 | 115.0 |
| Load 23 | Bus 23 | 247.5 | 84.6 |
| Load 24 | Bus 24 | 308.6 | -92.2 |
| Load 25 | Bus 25 | 224.0 | 47.2 |
| Load 26 | Bus 26 | 139.0 | 17.0 |
| Load 27 | Bus 27 | 281.0 | 75.5 |
| Load 28 | Bus 28 | 206.0 | 27.6 |
| Load 29 | Bus 29 | 283.5 | 26.9 |
| Load 31 | Bus 31 | 9.2 | 4.6 |
| Load 39 | Bus 39 | 1104.0 | 250.0 |

Table 2.3: Inertia constants of synchronous generators

| Generator | Inertia constant $H$ (s) |
|---|---|
| G01 | 5.000 |
| G03 | 4.475 |
| G06 | 4.350 |
| G05 | 4.333 |
| G02 | 4.329 |
| G10 | 4.200 |
| G07 | 3.771 |
| G04 | 3.575 |
| G08 | 3.471 |
| G09 | 3.450 |

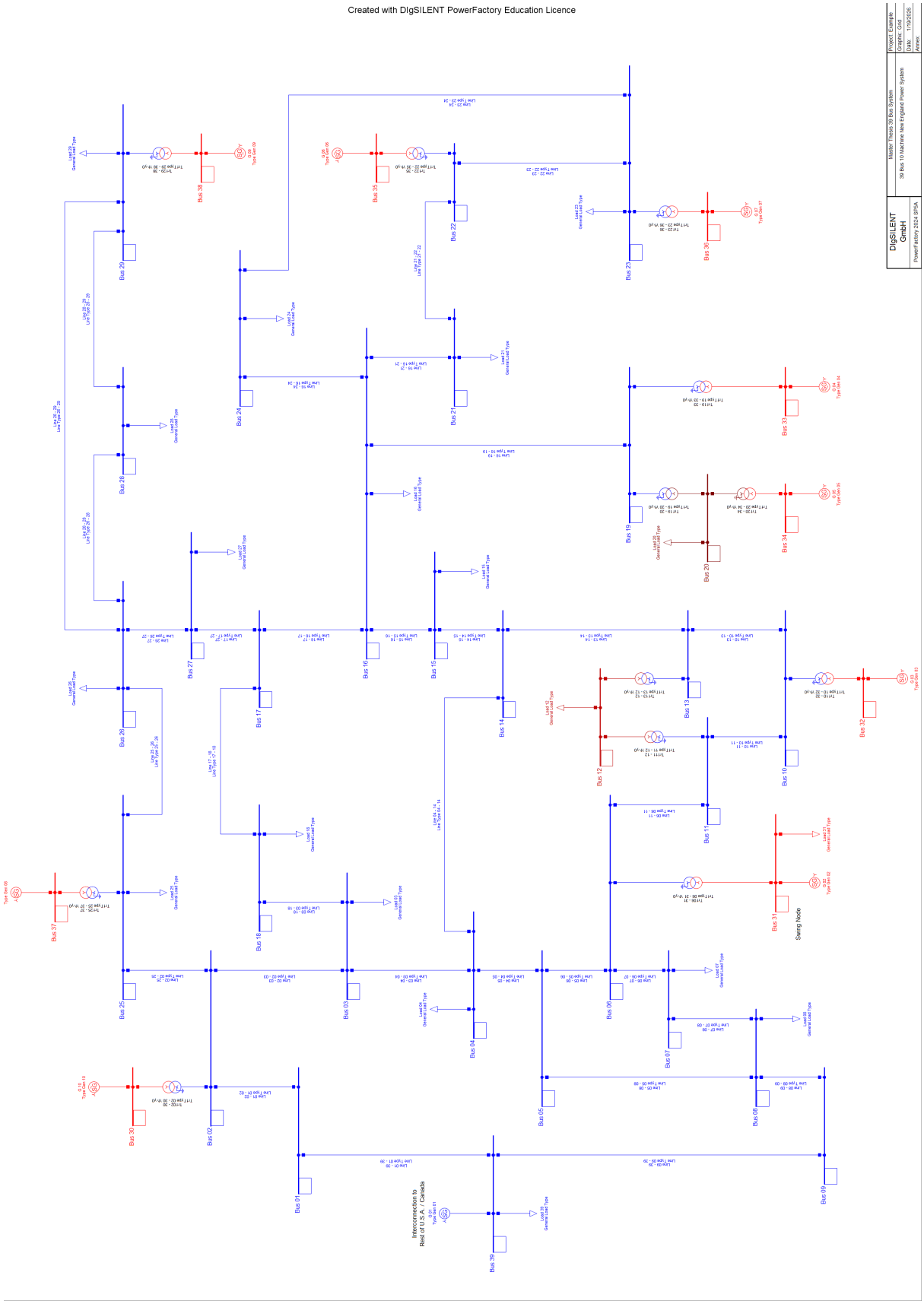


Figure 2.15: Single-line diagram of the IEEE 39-bus New England system

## 2.8 Research Gap and Motivation

The objective of this thesis is to evaluate frequency and voltage stability in a converter-dominated power system and to analyse how key GFM control parameters—virtual inertia, damping, and droop—behave under different grid strength scenarios. By assessing parameter sensitivity across strong, weak, and very weak grids, this work aims to provide a clear understanding of how GFM tuning affects system-level stability indicators. A brief overview of market-related considerations is also included to contextualize the practical relevance of GFM operation. Ultimately, the goal is to provide RWE with a consistent and transparent assessment framework to quantify the impact of GFM parameters on system stability and to offer insights into how these findings may influence future grid market designs and RWE's potential participation in them.

# Chapter 3

# Objectives

## 3.1 Research Question

## 3.2 Scenarios

# Chapter 4

# Developed Method

## 4.1 Method

## 4.2 IEEE 39 bus system replacement

The replacement of synchronous generators in DIgSILENT PowerFactory is carried out according to their dispatched active power, such that the generator with the lowest output is replaced first by a grid-following (GFL) inverter. Table 4.1 summarizes the sequential replacement of synchronous machines until unstable system behavior is observed. This methodology enables a systematic investigation of the effects of increasing renewable energy penetration while progressively reducing the share of synchronous generation, and consequently the available conventional inertia in the system.

A one-to-one replacement strategy is maintained throughout the analysis, whereby each synchronous generator is substituted by a GFL inverter of identical rated power. This ensures consistency of the steady-state operating point and preserves load-flow conditions at all times, allowing the observed system dynamics to be attributed solely to the change in generation technology

Table 4.1: Generator Replacement Sequence

| Replacement order | Replaced generator | Renewable penetration level in (%) |
|---|---|---|
| 1 | G10 | 4.05 |
| 2 | G05 | 12.34 |
| 3 | G08 | 21.46 |
| 4 | G07 | 30.25 |
| 5 | G04 | 40.54 |
| 6 | G03 | 51.10 |
| 7 | G06 | 61.71 |
| 8 | G09 | 75.23 |
| 9 | G02 (Slack) | 83.71 |
| 10 | G01 | 100.00 |

## Chapter 5

# Evaluation der Methode

## Chapter 6

# Ergebnisse

# Chapter 7

# Zusammenfassung und Ausblick

# Appendix A

# Programmcode

# Bibliography


[1] AEMO. *Frequency Operating Standards*. https://www.aemo.com.au. 2020.

[2] P. M. Anderson and A. A. Fouad. *Power System Control and Stability*. 2nd ed. Wiley-IEEE Press, 2003.

[3] J. Arrillaga and N. Watson. *Power Systems Electromagnetic Transients*. IET, 2003.

[4] Babak Badrzadeh and Zia Emin, eds. *Power System Dynamic Modelling and Analysis in Evolving Networks*. Cham, Switzerland: Springer and CIGRÉ, 2020. ISBN: 978-3-030-40152-6. DOI: 10.1007/978-3-030-40153-3.

[5] Yongxiang Cai et al. "Evaluation for Grid-Forming Capability of Battery Energy Storage Systems." In: *2024 8th International Conference on Power and Energy Engineering (ICPEE)*. 2024, pp. 222–226. DOI: 10.1109/ICPEE64457.2024.10949993.

[6] CIGRE Working Group B4.62. *Connection of Wind Farms to Weak AC Networks*. Tech. rep. CIGRE Technical Brochure 871, 2022.

[7] *Commission Regulation (EU) 2016/631 establishing a network code on requirements for grid connection of generators*. *Official Journal of the European Union*, L112. Also known as the Network Code on Requirements for Generators (NC RfG). 2016.

[8] *Connection of Distributed Energy Resources: Technical Requirements*. Tech. rep. Australian Energy Market Operator (AEMO), 2018.

[9] DIgSILENT GmbH. *DIgSILENT PowerFactory: IEEE 39-Bus New England System*. DIgSILENT PowerFactory example project. Accessed via DIgSILENT PowerFactory software. 2021.

[10] Christina Eckel, Davood Babazadeh, and Christian Becker. "Classification of Converter-Driven Stability and Suitable Modeling and Analysis Methods." In: *IEEE Access* 12 (2024), pp. 53056–53073. DOI: 10.1109/ACCESS.2024.3388098.

[11] EirGrid. *Grid Code Version 14.3*. Document. March. 2025.

[12] *ERCOT Requirements for HVDC and Weak Grid Integration*. Tech. rep. ERCOT, 2017.

[13] *Evaluation of Voltage Stability Assessment Methodologies in Modern Power Systems with High Penetration of Inverter-Based Resources*. Tech. rep. Joint Working Group C4/C2.58/IEEE PES. CIGRÉ and IEEE Power Energy Society, 2024.

[14] Mostafa Farrokhabadi et al. "Microgrid Stability Definitions, Analysis, and Examples." In: *IEEE Transactions on Power Systems* 35.1 (2020), pp. 13–29. DOI: 10.1109/TPWRS.2019.2925703.

[15] *Frequency Stability Evaluation Criteria for the Synchronous Zone of Continental Europe: Requirements and Impacting Factors*. Tech. rep. Prepared by a task force with members from REE, Terna, TransnetBW, 50Hertz Transmission, RTE, Swissgrid, and Energinet.dk. Brussels, Belgium: ENTSO-E, RG-CE System Protection & Dynamics Sub Group, Mar. 2016.

[16] Nikos Hatziargyriou et al. "Definition and Classification of Power System Stability – Revisited & Extended." In: *IEEE Transactions on Power Systems* 36.4 (2021), pp. 3271–3281. DOI: 10.1109/TPWRS.2020.3041774.

[17] *High Penetration of Power Electronic Interfaced Power Sources and the Potential Contribution of Grid Forming Converters*. Tech. rep. ENTSO-E, 2016.

[18] *IEEE Standard for Interconnection and Interoperability of Distributed Energy Resources with Associated Electric Power Systems Interfaces*. 2018.

[19] *IEEE Standard for Interconnection and Interoperability of Inverter-Based Resources Interconnecting with Associated Transmission Electric Power Systems*. 2022.

[20] *Impact of High Penetration of Inverter-Based Generation on System Inertia of Networks*. Tech. rep. Technical Brochure 851. CIGRÉ, 2021.

[21] P. Kundur. *Power System Stability and Control*. McGraw-Hill, 1994.

[22] P. Kundur et al. "Definition and classification of power system stability IEEE/CIGRE joint task force on stability terms and definitions." In: *IEEE Transactions on Power Systems* 19.3 (2004), pp. 1387–1401. DOI: 10.1109/TPWRS.2004.825981.

[23] Jianqiang Luo et al. "Converter-Driven Stability Analysis of Power Systems Integrated with Hybrid Renewable Energy Sources." In: *Energies* 14.14 (2021). ISSN: 1996-1073. DOI: 10.3390/en14144290. URL: https://www.mdpi.com/1996-1073/14/14/4290.

[24] National Grid ESO. *The Grid Code*. https://www.nationalgrideso.com/industry-information/codes/grid-code. 2022.

[25] Dinesh Pattabiraman, R. H. Lasseter., and T. M. Jahns. "Comparison of Grid Following and Grid Forming Control for a High Inverter Penetration Power System." In: *2018 IEEE Power & Energy Society General Meeting (PESGM)*. 2018, pp. 1–5. DOI: 10.1109/PESGM.2018.8586162.

[26] Amro Quedan, Deepak Ramasubramanian, and Evangelos Farantatos. "Virtual Oscillator Controlled Grid Forming Inverters Modelling and Testing in Phasor Domain." In: *2021 IEEE 12th Energy Conversion Congress & Exposition - Asia (ECCE-Asia)*. 2021, pp. 2375–2380. DOI: 10.1109/ECCE-Asia49820.2021.9479398.

[27] Dayan B. Rathnayake et al. "Grid Forming Inverter Modeling, Control, and Applications." In: *IEEE Access* 9 (2021). Received July 15, 2021; accepted August 7, 2021; published August 13, 2021; current version August 24, 2021, pp. 114723–114741. DOI: 10.1109/ACCESS.2021.3104617. URL: https://doi.org/10.1109/ACCESS.2021.3104617.

[28] Guanhong Song, Bo Cao, and Liuchen Chang. "Review of Grid-forming Inverters in Support of Power System Operation." In: *Chinese Journal of Electrical Engineering* 8.1 (2022), pp. 1–15. DOI: 10.23919/CJEE.2022.000001.

[29] ENTSO-E Task Force SPD-Inertia. *Inertia and Rate of Change of Frequency (RoCoF)*. Tech. rep. Brussels. ENTSO-E AISBL, 2020.

[30] Macit Tozak et al. "Modeling and Control of Grid Forming Converters: A Systematic Review." In: *IEEE Access* 12 (2024), pp. 107818–107843. DOI: 10.1109/ACCESS.2024.3437236.

[31] Yong Tu et al. "Improved virtual oscillator control for parallel operation inverter systems." In: *2016 IEEE 8th International Power Electronics and Motion Control Conference (IPEMC-ECCE Asia)*. 2016, pp. 2063–2067. DOI: 10.1109/IPEMC.2016.7512614.

[32] VDE FNN. *Technical Connection Rules for Generating Plants*. https://www.vde.com/fnn. 2019.

[33] Hao Xu et al. "A Review of Control Technologies and Principles for Grid-Forming Converters." In: *2025 10th Asia Conference on Power and Electrical Engineering (ACPEE)*. 2025, pp. 1496–1500. DOI: 10.1109/ACPEE64358.2025.11041180.

[34] Younes Zahraoui et al. "Grid-Forming Technologies for Resilient Renewable Energy Integration Into Power Systems: A Review." In: *2024 International Conference on Smart Systems and Technologies (SST)*. 2024, pp. 191–196. DOI: 10.1109/SST61991.2024.10755449.