Frankfurt University
of Applied Sciences

– Faculty of Computer Science and Engineering –

Assessment of Grid-Forming Inverter Impact on Dynamic Stability and System Strength in Converter-Dominated Power Systems

Thesis submitted in order to obtain the academic degree

Master of Engineering (M. Eng.)

submitted on 01. May 2026 on

Mario Alberto Tavera Leon

Student ID: 1501319

First Supervisor	:	Prof. Dr.-Ing. Carolina Tranchita Rativa
Second Supervisor	:	Prof. Dr. Ing Sebastian Schäfer

Non-Disclosure Notice

This scientific thesis contains information of the company Rheinisch-Westfälisches Elektrizitätswerk AG. The disclosure or unauthorized use of this thesis as a whole or in parts is prohibited. The prohibition shall only apply to information pertaining to the company Rheinisch-Westfälisches Elektrizitätswerk AG. Any other exceptions require the written consent of Rheinisch-Westfälisches Elektrizitätswerk AG.

Declaration

Hereby I assure that I have written the presented thesis independently and without any third party help and that I have not used any other tools or resources than the ones mentioned/referred to in the thesis.

Any parts of the thesis that have been taken from other published or yet unpublished works in terms of their wording or meaning are thoroughly marked with an indication of the source.

All figures in this thesis have been drawn by myself or are clearly attributed with a reference.

This work has not been published or presented to any other examination authority before. I am aware of the importance of the affidavit and the consequences under examination law as well as the criminal consequences of an incorrect or incomplete affidavit.

Frankfurt, 01. May 2026

Your Signature

Mario Alberto Tavera Leon

Contents

1 Introduction **2**

2 Literature Review **4**

2.1 Inverter-Based Resources (IBR): GFL vs GFM . . . 4

2.1.1 Grid Following Inverters . . . 5

2.1.2 Grid Forming Inverters . . . 7

2.2 GFM Control Methods . . . 9

2.2.1 Droop Control . . . 9

2.2.2 Virtual Synchronous Machine . . . 9

2.2.3 Virtual Oscillator Control . . . 10

2.3 Grid Forming Capanilities . . . 10

2.4 Power System Stability and Resilience . . . 10

2.5 Frequency and Voltage Stability Indicators . . . 10

2.6 Grid Strength and Short-Circuit Ratio . . . 11

2.7 Real World Examples . . . 11

2.8 Conventional Stability Support . . . 11

2.9 Research Gap and Motivation . . . 11

2.10 German Energy Market . . . 11

2.11 Grid Stability . . . 11

2.12 Ancillary Services . . . 11

3 Objectives **12**

3.1 Research Question . . . 12

3.2 Scenarios . . . 12

4 Developed Method **13**

4.1 Method . . . 13

5 Evaluation der Methode **14**

6 Ergebnisse **15**

7 Zusammenfassung und Ausblick **16**

A Programmcode **17**

Bibliography **20**

Abstract

This is the abstract of the document, here the abstract will be provided
This is just a try to observe how does the document is being done

Chapter 1

Introduction

The global energy transition is driving society toward cleaner and more sustainable ways of producing electricity. This transformation has accelerated the deployment of renewable energy sources, most of which are connected to the grid through power electronic converters, commonly referred to as Inverter Based Resources (IBRs). Unlike conventional synchronous machines, IBRs lack the natural inertia and damping that arise from the big rotating masses of generators. As synchronous units are progressively being decommissioned, the power system experiences reduced inertia and weaker frequency stability. This shift towards power systems with high penetration of IBRs creates new challenges in maintaining dynamic stability, especially under large disturbances.

IBRs can be broadly categorized into Grid-Following (GFL) and Grid-Forming (GFM) inverters. Grid-Following inverters operate as controlled current sources that inject current based on an externally measured grid voltage. In contrast, Grid-Forming inverters behave as controlled voltage sources, capable of establishing their own voltage and frequency references. This fundamental difference enables GFM inverters to provide advanced functionalities such as islanded operation, black-start capability, and voltage and frequency support during disturbances. As a result, they are seen as a promising solution to enhance the stability of low-inertia systems. Among the technologies capable of providing GFM capability, Battery Energy Storage Systems (BESS) are particularly attractive. Their fast response and bidirectional power flow make them suitable for supporting the grid during transients while participating in energy arbitrage and ancillary service markets. As energy markets evolve to value flexibility and stability, understanding how BESS equipped with GFM control can contribute technically and economically becomes crucial. For RWE, many assets are connected at distribution system level, where the interaction between multiple IBRs and the grid can be complex. However, manufacturers often protect the internal control algorithms of their inverters, limiting transparency and making it challenging for developers to predict system behavior.

Therefore, it is important to understand how GFM parameters—such as virtual inertia, damping, and droop coefficients—affect system performance, and how these can be interpreted from available manufacturer data sheets to ensure appropriate equipment selection and sizing. This thesis aims to analyze the impact of Grid-Forming parameters on system stability under large disturbances using PowerFactory simulations at the distribution network level. Different park configurations—including standalone BESS and hybrid renewable plants—will be evaluated to determine the minimum share of GFM capacity required to ensure stable operation. The study focuses on system-level behavior and parameter sensitivity, not on designing or modifying inverter control loops. By doing so, it supports RWE in developing internal capability to assess GFM behavior and translate manufacturer information into actionable technical requirements. Managing the stability of future power systems requires addressing the growing share of generation from nontraditional sources, including renewable technologies such as solar or wind and energy storage systems like batteries. These resources not only exhibit variability due to their weather-dependent energy inputs but also span a wide range of capacities—from small residential rooftop installations of a few kilowatts to large utility-scale plants reaching hundreds or even thousands of megawatts. Moreover, they are integrated across multiple grid levels, connecting both within distribution networks and directly to high-voltage transmission systems.

The operation of future power networks must integrate both the inherent dynamics and control responses of traditional large-scale synchronous machines and those of emerging inverter-based generation technologies.

The thesis provides a quantitative estimate of the minimum GFM share required for acceptable dynamic performance across different grid strengths, it also provide

Chapter 2

Literature Review

2.1 Inverter-Based Resources (IBR): GFL vs GFM

As a result of the increasing demand in power systems for renewable energy technologies, inverter-based resources (IBRs) are becoming a relevant component of AC power systems. Typically, Distributed Energy Resources (DERs) produce electricity as Direct Current (DC); therefore, an inverter is required to transform the waveform into Alternating Current (AC). The inverter thus acts as the interface between DERs and the electric grid.

Due to the natural intermittency of renewable energies such as wind and solar, extracting the maximum available energy at any time has been a major objective in the integration of these assets. However, these assets are not able to provide inertia, unlike the large rotating masses of synchronous generators. Consequently, the reduction in mechanical inertia from synchronous machines has become a topic of concern for grid operators. This reduction results in larger frequency swings when the system experiences disturbances, such as load variations. These events can consequently trip loads or inverter-based units, thereby increasing reliability issues for the power system [5]

The primary objective of IBRs is to supply active and reactive power to the grid; however, depending on their interaction with the grid, their behavior under disturbances, and the controller implementation, IBRs can be classified into two major groups: grid-following (GFL) and grid-forming (GFM) inverters.[6]

From an economic point of view, it is generally more attractive to install GFL inverters, since the main goal is to sell as much available energy as possible to the grid. GFL inverters can maximize energy production through algorithms such as Maximum Power Point Tracking (MPPT). Nevertheless, as the share of this type of inverter increases within the power system, voltage and frequency regulation become a challenge. To address this, grid operators have imposed requirements for inverters to support the grid by injecting reactive power and by adjusting their active power output in response to grid variations.

As an illustrative example, [3] discusses reactive power (Q) support. Whenever a voltage deviation occurs, the IBR should be able to detect and respond accordingly. In the case of a voltage decrease, the inverter must supply reactive power according to a predefined droop setting; conversely, for a voltage increase, the inverter should absorb (supply negative) reactive power.

As previously discussed, the main function of a Grid-Following (GFL) inverter is to inject active and reactive power into the grid. The distinction between GFL and Grid-Forming (GFM) inverters lies not only in the manner in which these inverters deliver active and reactive power (P,Q), but also in their fundamental control objectives. While GFL inverters rely on the existing grid to define voltage and frequency, GFM inverters actively regulate these parameters, establishing and maintaining the grid's voltage and frequency reference.

The main distinction between Grid-Following (GFL) and Grid-Forming (GFM) inverters lies in their underlying control principles and the way they interact with the grid.

Overall, both GFM and GFL inverters share similar grid-support and power-generation objectives during grid-connected operation. These objectives are achieved either through active and reactive power adjustments in the case of GFL control,

or through voltage and frequency regulation in the case of GFM control [8]

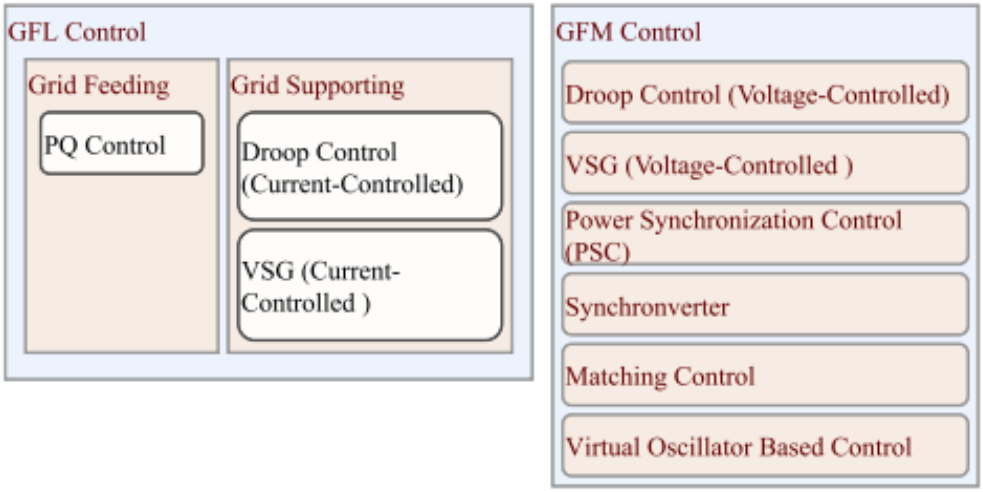

Figure 2.1: fig: Grid Connected Converter Classification: GFL and GFM Control [9]

2.1.1 Grid Following Inverters

A fundamental challenge in low-inertia power systems is that most existing inverter controllers are equipped with GFL control. This type of control is designed under the assumption that inertial sources, such as synchronous generators or grid-forming inverters, regulate the voltage and frequency of the grid. [2]. Another challenge arises because large PV plants or onshore wind farms are often located far from consumption centers; consequently, long transmission lines are required. As a result, the grid impedance "seen" from the IBR side tends to be high, and such areas are commonly referred to as weak parts of the grid. In these sections, maintaining voltage regulation through conventional methods becomes difficult.

Currently, the majority of PV inverters connected to the grid operate as grid-following (GFL) inverters. This type of inverter adjusts its power output by synchronizing with the grid through a Phase-Locked Loop (PLL). The PLL works by continuously measuring the angle and frequency of the grid voltage. [5].

The synchronization of a GFL inverter is achieved through a Phase-Locked Loop (PLL). In this configuration, the inverter behaves as a current source, injecting current into the existing grid voltage. From a control perspective, a GFL inverter can be modeled as a controlled current source connected in parallel with a high impedance. The inverter measures the voltage at the Point of Common Coupling (PCC), v_{PCC} , using the PLL. This signal is then transformed via the Clarke and Park Transformation into the direct and quadrature (dq) components. The power control sets the desired dq currents required to inject the desired Active and Reactive Power. The Current Control source model is shown in Fig 2.1. C_p denotes the outer power control loop and θ represents the phase angle. Under the GFL operation, only current magnitude and phase angle in the output current are adjusted to achieve the desired active/reactive power outputs. The current source frequency remains identical to the grid frequency.

The Grid-Following (GFL) control strategy operates by delivering the commanded active P_{ref} and reactive Q_{ref} power based on the grid measurements provided by the PLL. The power control block calculates the reference currents, which are expressed in the dq-frame and regulated by a fast inner current-control loop that ensures the inverter output current follows its reference accurately. In this way, the inverter can be represented as a controlled current source connected to the grid at the PCC through the grid impedance, depending on the existing grid voltage to maintain synchronization and power delivery. During large disturbances, the GFL inverter detects changes through voltage and current measurements, which inherently introduce delays in the provision of active and reactive power support. From a small-signal stability

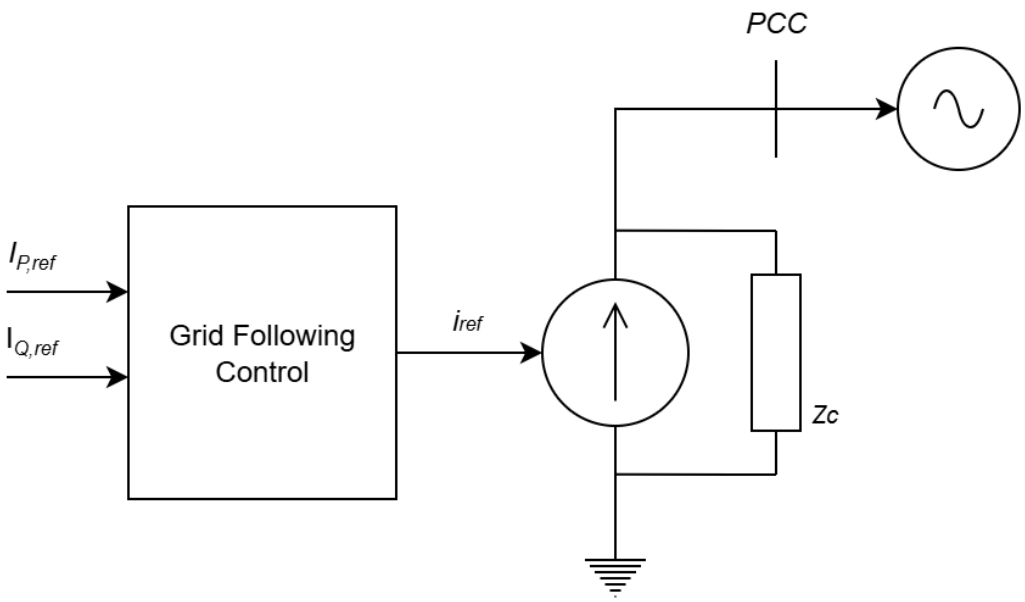

Figure 2.2: fig:Grid Following Inverter Control Structure [10]

perspective, since the GFL inverter relies on the PLL for grid voltage and angle measurements, its stability margin can be significantly reduced under sudden grid variations.[6]

Next, the detailed control blocks of the Grid-Following Inverter is presented. The measured grid current is denoted by $I(f)$ The inverter output voltage is represented by U_{out}, and θ denotes the phase angle of the grid voltage. After the inverter is synchoniyed within the grid, the control references are then sent to the control blocks to achieve the desired performance. The GFL inverter, aside from its capability to provide limited grid support, is primarily designed for efficient power conversion, enabling it to deliver high-quality power to the grid under normal grid operating conditions. Beyond these limits, the GFL inverter must be disconnected. [8]

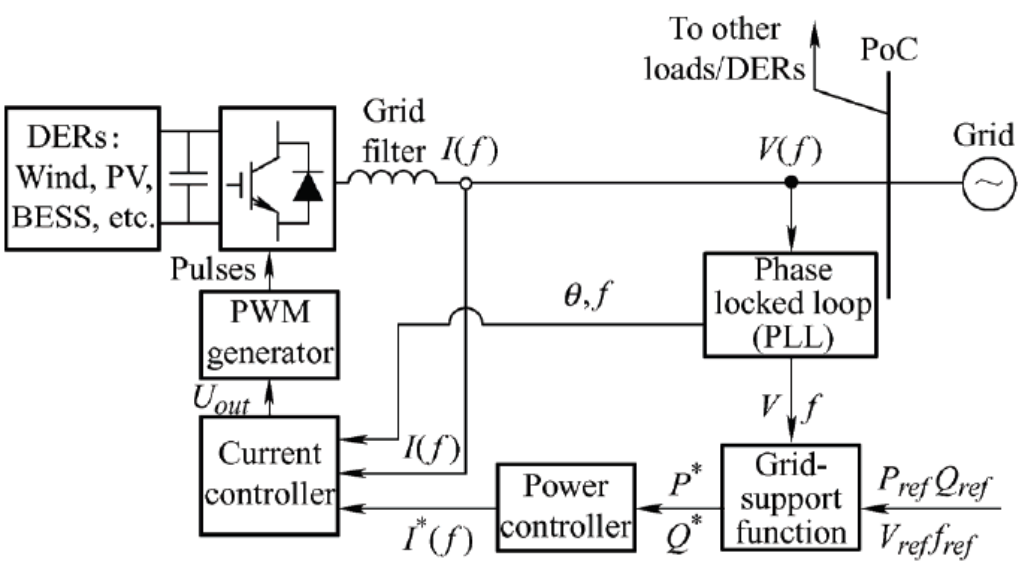

Figure 2.3: fig:Grid Following Inverter Detailes Control Blocks [8]

2.1.2 Grid Forming Inverters

In order to address the challenge of a high increase of Grid Following Inverters (GFL), the Grid Forming Control was introduced, the need for one or multiple inverters that is able to operate as voltage and/or frequency regulator(s) to form a local power grid was then presented. GFM control do not depend on a PLL, since they are able to self-synchronize with the grid, they are able to create its own voltage and frequency reference. [4] As mentioned before, GFL inverters rely on PLLs to synchronize with an existing grid. In contrast, GFM can autonomously create or establish voltage and frequency references, this capability allows them to improve stability and support capabilities for the grid. [10]

Grid-Forming (GFM) converters operate as voltage sources that self-synchronize by internally generating their own voltage and frequency references. By emulating the inertia and damping characteristics of synchronous machines, GFM controllers provide enhanced frequency and voltage support. These capabilities make them particularly robust in weak-grid, islanded, or high-renewable environments, where fast and adaptive control is crucial. Overall, GFM converters exhibit higher independence, stability, and flexibility under varying grid conditions, positioning them as a key enabling technology for future power systems with high shares of renewable energy. [10]

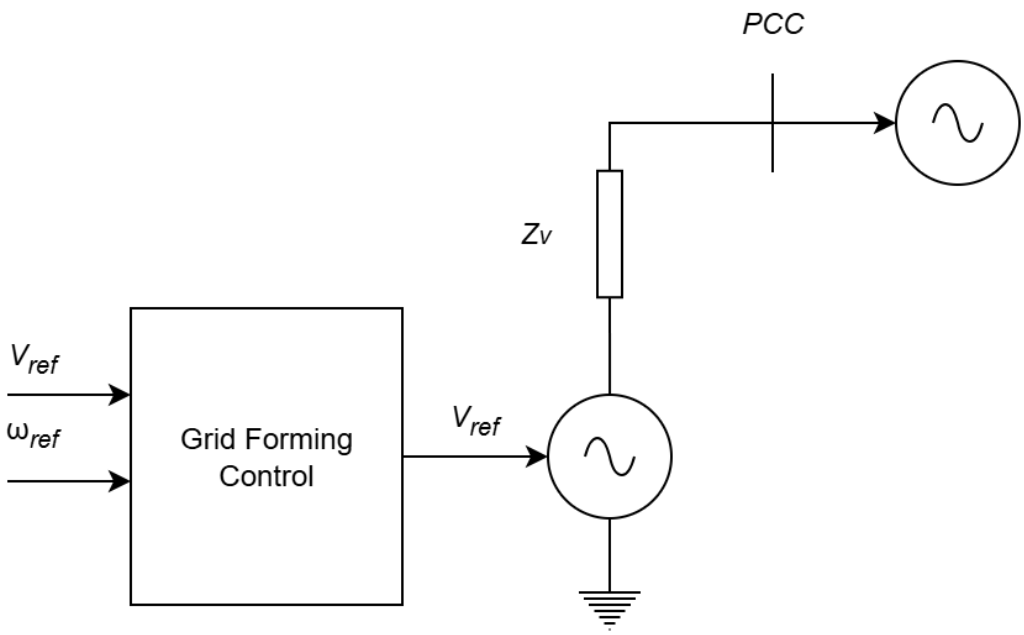

Figure 2.4: fig:Grid Forming Inverter Control Structure [10]

In this case Z_{load} corresponds to the sum of all other loads in the network during islanding operations.

Among the most widely implemented control strategies for Grid-Forming (GFM) inverters are the droop control, virtual oscillator control (VOC), and virtual synchronous generator (VSG) approaches. These methods enable GFM inverters to provide voltage, frequency, and inertia support to the power grid, while ensuring stable and coordinated operation under parallel inverter conditions. Moreover, additional functionalities have been incorporated into GFM inverters, such as self-synchronization — specifically proposed for two-stage inverter architectures — which introduces DC-link voltage regulation through droop control. Other features include the seamless mode transition function, which enables flexible operation of a microgrid between grid-connected and islanded modes; the black-start capability, allowing system restoration after a complete blackout; and the coordinated control function, which facilitates inverter operation under unbalanced grid conditions. [8].

Next, the detailed control blocks for the GFM are presented. In contrast to the GFL inverter, the GFM does not necessarily require synchronization. Under normal grid-connected operation, the GFM can follow power reference signals provided by a system-level controller or an MPPT algorithm, with the purpose of delivering high-quality power to the grid. Conversely, during abnormal grid conditions, the GFM is capable of generating its own voltage and frequency based on the preset

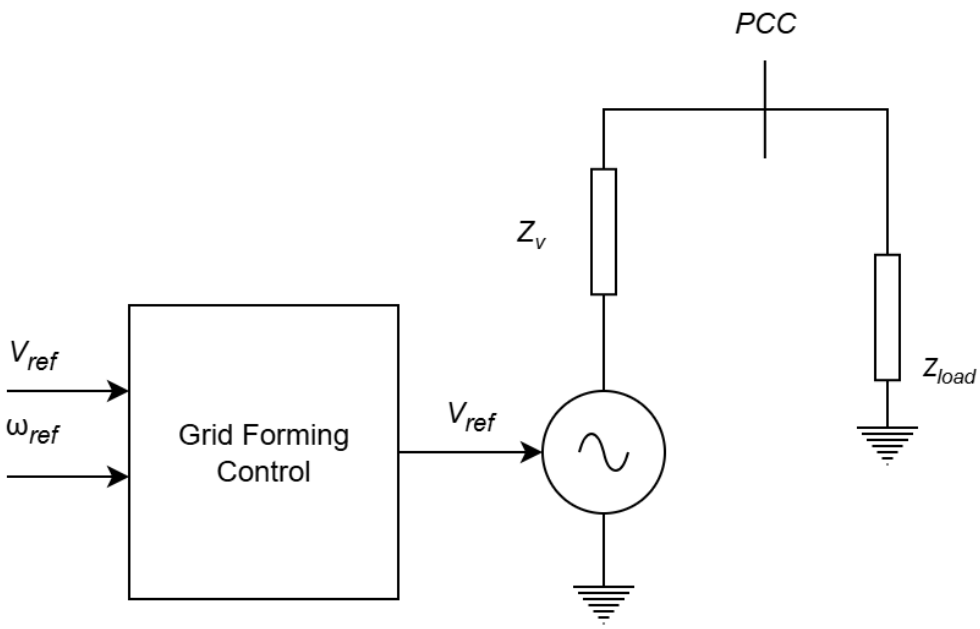

Figure 2.5: fig:Grid Forming Inverter Control Structure Islanding Operation [8]

reference values of the controller, without the need for a PLL.GFM allows providing direct voltage, frequency and inertia support to the utility grid. [8]

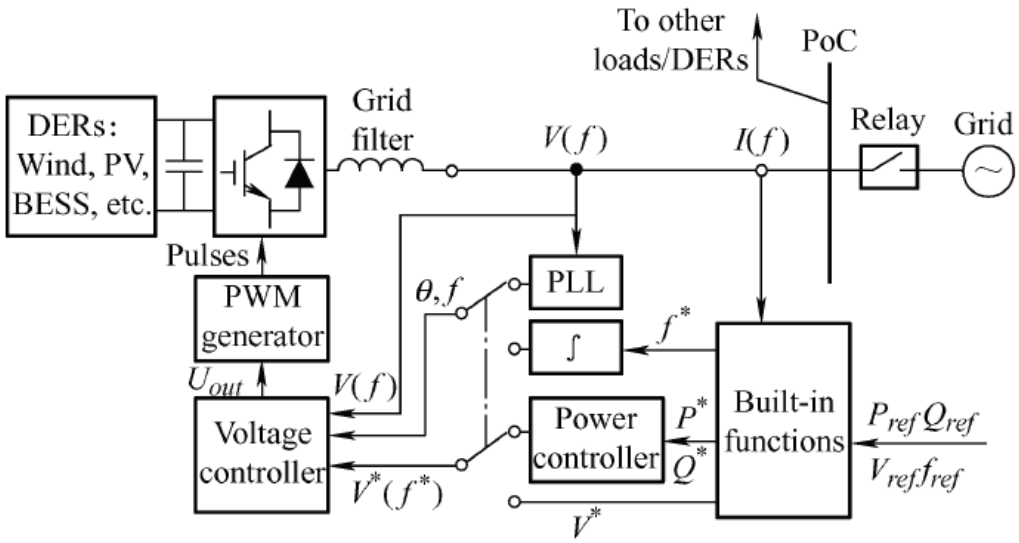

Figure 2.6: fig:Grid Forming Inverter Detailed Control Blocks [8]

2.2 GFM Control Methods

Distributed Generators (DGs) are usually composed of a DC link and two-stages: input-side converter and grid-side converter. The input side varies depending on the specific type of technolgy used and the enregy source used. On the other hand, the grid-side converter is normally a dc/ac converter.

Grid-Forming technologies, by autonomously adjusting their output and frequencz, via their control mechanisms, ensure a seamless operation, independently from dynamic load confitions and changes in solar irradiance levels, in case, for example for photovoltaic grid forming plants. This inverters operate based on fundamental principles, power control, frequency regulation and voltage support. [11]

- Power control strategy: GFM control algorithms control the active and reactive power outputs, in this way, devices can balance effectively power generation and demand when demand or generation fluctuate.
- Frequency Regulation: GFM adjust autonomously grid frequency, in case of frequency deviatons, GFM modify its output to restore the grid frequency nominal value.
- Voltage control: By controlling reactive power flow, GFMs are able to provide grid support during transient conditions and ensure voltage stability.

The first objective in the controller design, despite the control method choosed is to comply and meet the requirements imposed by the grid codes, ensuring the continuous and stable operation of the power converter during steady state and transient conditions. [9]

2.2.1 Droop Control

The droop control method resembles the speed droop mechanism of a synchronous Generator, it's control method is baded from the primary frequency control of the Synchronous generator. It provides power sharing capability propotional to the nominal power of the converter. In this contrl method it exists an inverse relationship between frequency deviation and power change.[9] Droop controll is one of the most mature control methods for Grid Forming. It adjusts the frequency and amplitude of the reference voltage through the P-f and Q-V droop loops, respecteviley. The purpose is to emulate the frequency and voltage regulation characteristics of Synchronous Generators. However, the rotor motion of the Synchronous Generator is not part of the loop control or is not emulated (The known as swing equation), which describes the dynamic motion of the rotor in a big rotating synchronous machines, they are not capable of delivering inertia support. The frequency and voltage dynamics under the control loop can be expressed with the next equations. [1]

$$\begin{cases} \omega = \omega_{\text{ref}} + K_P(P_{\text{ref}} - P) \\ V = V_{\text{ref}} + K_Q(Q_{\text{ref}} - Q) \end{cases} \tag{2.1}$$

In the equations shown, ω represents the grid frequency and V represent the grid voltage, respectively. P and Q correspond to the active and reactive power and P_{ref} and Q_{ref} denote its nominal values. In the equation, the terms K_P and K_Q are the frequency and voltage droop coefficients.

Droop based control uses voltage and frequency droop characteristics to regulate power sharing, this is highlz benefit for the power system as further multi inverter synchronization is not required, eneabling decentralized and robust control. [11]

2.2.2 Virtual Synchronous Machine

In contrast with the froop control, VSM emulates the rotor motion and the electromagnetic transient equation of the synchronous machine, in this way, virtual inertia can be provided, as the control tries to replicate the inherent behaviour of big rotating masses, when subjecteds to a fault, basically natural inertia (describe what inertia is). This method avoid

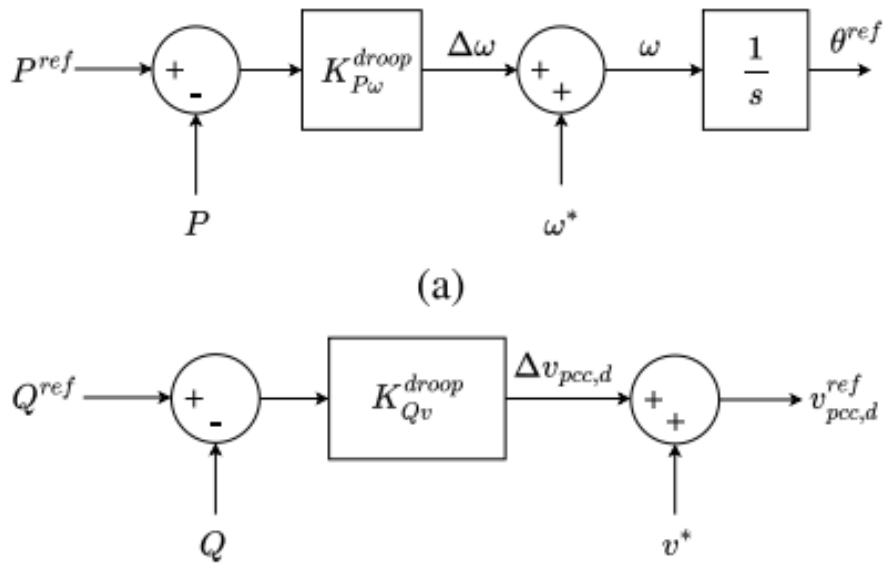

Figure 2.7: fig:Block Diagram frequency and voltage droop control [9]

rapid fluctiations in the frequency and the voltage, it also provides inertia, damping and voltage support. The equation that descrobes the VSM control is represented by [1].

$$J\omega s = \frac{(P_{\text{ref}} - P)}{\omega_{\text{ref}}} - D(\omega_{\text{ref}} - \omega) \tag{2.2}$$

AGREGAR IMAGENES DEL VIRTUAL SYNCHRONOUES MACHINE

J is the rotational inertia, D denotes the damping coefficient for the frequency. The emulation of the behaviour of the synchronous machine allows the GFM inverter to provide virtual inertia which support stabilizing the grid during dynamic grid conditions. A clear disadvantage of this control technique is that the inverter tunnnig parameters is complex and the droop control technique is more mature and proved. [11]

2.2.3 Virtual Oscillator Control

This control technique utilizes virtual oscillator models to synchronize multiple grid forming devices without the need of external signals, this advamntage can be translated into an independant synchronization, which makes the GFM compatible with various grid conditions. However, it is observed a high sensitivity to tunning parameters and a limited synchronization range. [11]

2.3 Grid Forming Capanilities

2.4 Power System Stability and Resilience

2.5 Frequency and Voltage Stability Indicators

2.6 Grid Strength and Short-Circuit Ratio

2.7 Real World Examples

2.8 Conventional Stability Support

2.9 Research Gap and Motivation

2.10 German Energy Market

2.11 Grid Stability

2.12 Ancillary Services

Defined by the standards, the first DG units required their disconnection in the case of grid faults. However, this operation is no longer accepted for modern DG plants, for instance, for modern wind power systems, the low votage ride thorugh (LVRT) [7]

Chapter 3

Objectives

3.1 Research Question

3.2 Scenarios

Chapter 4

Developed Method

4.1 Method

As we see ...

Chapter 5

Evaluation der Methode

Chapter 6

Ergebnisse

Chapter 7

Zusammenfassung und Ausblick

Appendix A

Programmcode

Bibliography

[1] Yongxiang Cai et al. "Evaluation for Grid-Forming Capability of Battery Energy Storage Systems." In: *2024 8th International Conference on Power and Energy Engineering (ICPEE)*. 2024, pp. 222–226. DOI: 10.1109/ICPEE64457.2024.10949993.

[2] Yashen Lin et al. *Stabilizing the Power System in 2035 and Beyond: Evolving from Grid-Following to Grid-Forming Distributed Inverter Controllers (Final Technical Report)*. Tech. rep. National Renewable Energy Laboratory (NREL), Golden, CO (United States); Univ. of Minnesota, Minneapolis, MN (United States); Univ. of California, Santa Barbara, CA (United States); Sun Power, San Jose, CA (United states); Lawrence Berkeley National Lab. (LBNL), Berkeley, CA (United States); Sandia National Lab. (SNL-NM), Albuquerque, NM (United States); Univ. of Wisconsin, Madison, WI (United States), Aug. 2021. DOI: 10.2172/1813971. URL: https://www.osti.gov/biblio/1813971.

[3] B. Mirafzal and A. Adib. "On Grid-Interactive Smart Inverters: Features and Advancements." In: *IEEE Access* 8 (2020), pp. 160526–160536. DOI: 10.1109/ACCESS.2020.3020935.

[4] Abhishekh Mishra et al. "A Comparative Analysis of Grid-Following and Grid-Forming Control Techniques Used in Inverter-based Resources." In: *2025 IEEE 1st International Conference on Smart and Sustainable Developments in Electrical Engineering (SSDEE)*. 2025, pp. 01–06. DOI: 10.1109/SSDEE64538.2025.10968238.

[5] Dinesh Pattabiraman, R. H. Lasseter., and T. M. Jahns. "Comparison of Grid Following and Grid Forming Control for a High Inverter Penetration Power System." In: *2018 IEEE Power & Energy Society General Meeting (PESGM)*. 2018, pp. 1–5. DOI: 10.1109/PESGM.2018.8586162.

[6] Dayan B. Rathnayake et al. "Grid Forming Inverter Modeling, Control, and Applications." In: *IEEE Access* 9 (2021). Received July 15, 2021; accepted August 7, 2021; published August 13, 2021; current version August 24, 2021, pp. 114723–114741. DOI: 10.1109/ACCESS.2021.3104617. URL: https://doi.org/10.1109/ACCESS.2021.3104617.

[7] Joan Rocabert et al. "Control of Power Converters in AC Microgrids." In: *IEEE Transactions on Power Electronics* 27.11 (2012), pp. 4734–4749. DOI: 10.1109/TPEL.2012.2199334.

[8] Guanhong Song, Bo Cao, and Liuchen Chang. "Review of Grid-forming Inverters in Support of Power System Operation." In: *Chinese Journal of Electrical Engineering* 8.1 (2022), pp. 1–15. DOI: 10.23919/CJEE.2022.000001.

[9] Macit Tozak et al. "Modeling and Control of Grid Forming Converters: A Systematic Review." In: *IEEE Access* 12 (2024), pp. 107818–107843. DOI: 10.1109/ACCESS.2024.3437236.

[10] Hao Xu et al. "A Review of Control Technologies and Principles for Grid-Forming Converters." In: *2025 10th Asia Conference on Power and Electrical Engineering (ACPEE)*. 2025, pp. 1496–1500. DOI: 10.1109/ACPEE64358.2025.11041180.

[11] Younes Zahraoui et al. "Grid-Forming Technologies for Resilient Renewable Energy Integration Into Power Systems: A Review." In: *2024 International Conference on Smart Systems and Technologies (SST)*. 2024, pp. 191–196. DOI: 10.1109/SST61991.2024.10755449.