Frankfurt University
of Applied Sciences

– Faculty of Computer Science and Engineering –

Assessment of Grid-Forming Inverter Impact on Dynamic Stability and System Strength in Converter-Dominated Power Systems

Thesis submitted in order to obtain the academic degree

Master of Engineering (M. Eng.)

submitted on 01. May 2026 on

Mario Alberto Tavera Leon

Student ID: 1501319

First Supervisor	:	Prof. Dr.-Ing. Carolina Tranchita Rativa
Second Supervisor	:	Prof. Dr. Ing Sebastian Schäfer

Non-Disclosure Notice

This scientific thesis contains information of the company Rheinisch-Westfälisches Elektrizitätswerk AG. The disclosure or unauthorized use of this thesis as a whole or in parts is prohibited. The prohibition shall only apply to information pertaining to the company Rheinisch-Westfälisches Elektrizitätswerk AG. Any other exceptions require the written consent of Rheinisch-Westfälisches Elektrizitätswerk AG.

Declaration

Hereby I assure that I have written the presented thesis independently and without any third party help and that I have not used any other tools or resources than the ones mentioned/referred to in the thesis.

Any parts of the thesis that have been taken from other published or yet unpublished works in terms of their wording or meaning are thoroughly marked with an indication of the source.

All figures in this thesis have been drawn by myself or are clearly attributed with a reference.

This work has not been published or presented to any other examination authority before. I am aware of the importance of the affidavit and the consequences under examination law as well as the criminal consequences of an incorrect or incomplete affidavit.

Frankfurt, 01. May 2026

Your Signature

Mario Alberto Tavera Leon

Contents

1 Introduction **2**

2 Literature Review **4**

2.1 Inverter-Based Resources (IBR): GFL vs GFM . . . 4

2.1.1 Grid Following Inverters . . . 5

2.1.2 Grid Forming Inverters . . . 7

2.2 GFM Control Methods . . . 9

2.2.1 Droop Control . . . 9

2.2.2 Virtual Synchronous Machine . . . 10

2.2.3 Virtual Oscillator Control . . . 11

2.3 Power System Stability . . . 12

2.3.1 Categories of Stability . . . 14

2.4 RMS and EMT Approaches . . . 15

2.5 Frequency and Voltage Stability Indicators . . . 16

2.6 Grid Strength and Short-Circuit Ratio . . . 16

2.7 Real World Examples . . . 16

2.8 Research Gap and Motivation . . . 16

3 Objectives **17**

3.1 Research Question . . . 17

3.2 Scenarios . . . 17

4 Developed Method **18**

4.1 Method . . . 18

5 Evaluation der Methode **19**

6 Ergebnisse **20**

7 Zusammenfassung und Ausblick **21**

A Programmcode **22**

Bibliography **25**

Abstract

This is the abstract of the document, here the abstract will be provided
This is just a try to observe how does the document is being done

Chapter 1

Introduction

The global energy transition is driving society toward cleaner and more sustainable ways of producing electricity. This transformation has accelerated the deployment of renewable energy sources, most of which are connected to the grid through power electronic converters, commonly referred to as Inverter Based Resources (IBRs). Unlike conventional synchronous machines, IBRs lack the natural inertia and damping that arise from the big rotating masses of generators. As synchronous units are progressively being decommissioned, the power system experiences reduced inertia and weaker frequency stability. This shift towards power systems with high penetration of IBRs creates new challenges in maintaining dynamic stability, especially under large disturbances.

IBRs can be broadly categorized into Grid-Following (GFL) and Grid-Forming (GFM) inverters. Grid-Following inverters operate as controlled current sources that inject current based on an externally measured grid voltage. In contrast, Grid-Forming inverters behave as controlled voltage sources, capable of establishing their own voltage and frequency references. This fundamental difference enables GFM inverters to provide advanced functionalities such as islanded operation, black-start capability, and voltage and frequency support during disturbances. As a result, they are seen as a promising solution to enhance the stability of low-inertia systems. Among the technologies capable of providing GFM capability, Battery Energy Storage Systems (BESS) are particularly attractive. Their fast response and bidirectional power flow make them suitable for supporting the grid during transients while participating in energy arbitrage and ancillary service markets. As energy markets evolve to value flexibility and stability, understanding how BESS equipped with GFM control can contribute technically and economically becomes crucial. For RWE, many assets are connected at distribution system level, where the interaction between multiple IBRs and the grid can be complex. However, manufacturers often protect the internal control algorithms of their inverters, limiting transparency and making it challenging for developers to predict system behavior.

Therefore, it is important to understand how GFM parameters—such as virtual inertia, damping, and droop coefficients—affect system performance, and how these can be interpreted from available manufacturer data sheets to ensure appropriate equipment selection and sizing. This thesis aims to analyze the impact of Grid-Forming parameters on system stability under large disturbances using PowerFactory simulations at the distribution network level. Different park configurations—including standalone BESS and hybrid renewable plants—will be evaluated to determine the minimum share of GFM capacity required to ensure stable operation. The study focuses on system-level behavior and parameter sensitivity, not on designing or modifying inverter control loops. By doing so, it supports RWE in developing internal capability to assess GFM behavior and translate manufacturer information into actionable technical requirements. Managing the stability of future power systems requires addressing the growing share of generation from nontraditional sources, including renewable technologies such as solar or wind and energy storage systems like batteries. These resources not only exhibit variability due to their weather-dependent energy inputs but also span a wide range of capacities—from small residential rooftop installations of a few kilowatts to large utility-scale plants reaching hundreds or even thousands of megawatts. Moreover, they are integrated across multiple grid levels, connecting both within distribution networks and directly to high-voltage transmission systems.

The operation of future power networks must integrate both the inherent dynamics and control responses of traditional large-scale synchronous machines and those of emerging inverter-based generation technologies.

The thesis provides a quantitative estimate of the minimum GFM share required for acceptable dynamic performance across different grid strengths, it also provide

Chapter 2

Literature Review

2.1 Inverter-Based Resources (IBR): GFL vs GFM

As a result of the increasing demand in power systems for renewable energy technologies, inverter-based resources (IBRs) are becoming a relevant component of AC power systems. Typically, Distributed Energy Resources (DERs) produce electricity as Direct Current (DC); therefore, an inverter is required to transform the waveform into Alternating Current (AC). The inverter thus acts as the interface between DERs and the electric grid.

Due to the natural intermittency of renewable energies such as wind and solar, extracting the maximum available energy at any time has been a major objective in the integration of these assets. However, these assets are not able to provide inertia, unlike the large rotating masses of synchronous generators. Consequently, the reduction in mechanical inertia from synchronous machines has become a topic of concern for grid operators. This reduction results in larger frequency swings when the system experiences disturbances, such as load variations. These events can consequently trip loads or inverter-based units, thereby increasing reliability issues for the power system [12]

The primary objective of IBRs is to supply active and reactive power to the grid; however, depending on their interaction with the grid, their behavior under disturbances, and the controller implementation, IBRs can be classified into two major groups: grid-following (GFL) and grid-forming (GFM) inverters.[14]

From an economic point of view, it is generally more attractive to install GFL inverters, since the main goal is to sell as much available energy as possible to the grid. GFL inverters can maximize energy production through algorithms such as Maximum Power Point Tracking (MPPT). Nevertheless, as the share of this type of inverter increases within the power system, voltage and frequency regulation become a challenge. To address this, grid operators have imposed requirements for inverters to support the grid by injecting reactive power and by adjusting their active power output in response to grid variations.

As an illustrative example, [10] discusses reactive power (Q) support. Whenever a voltage deviation occurs, the IBR should be able to detect and respond accordingly. In the case of a voltage decrease, the inverter must supply reactive power according to a predefined droop setting; conversely, for a voltage increase, the inverter should absorb (supply negative) reactive power.

As previously discussed, the main function of a Grid-Following (GFL) inverter is to inject active and reactive power into the grid. The distinction between GFL and Grid-Forming (GFM) inverters lies not only in the manner in which these inverters deliver active and reactive power (P,Q), but also in their fundamental control objectives. While GFL inverters rely on the existing grid to define voltage and frequency, GFM inverters actively regulate these parameters, establishing and maintaining the grid's voltage and frequency reference.

The main distinction between Grid-Following (GFL) and Grid-Forming (GFM) inverters lies in their underlying control principles and the way they interact with the grid.

Overall, both GFM and GFL inverters share similar grid-support and power-generation objectives during grid-connected operation. These objectives are achieved either through active and reactive power adjustments in the case of GFL control,

or through voltage and frequency regulation in the case of GFM control [15]

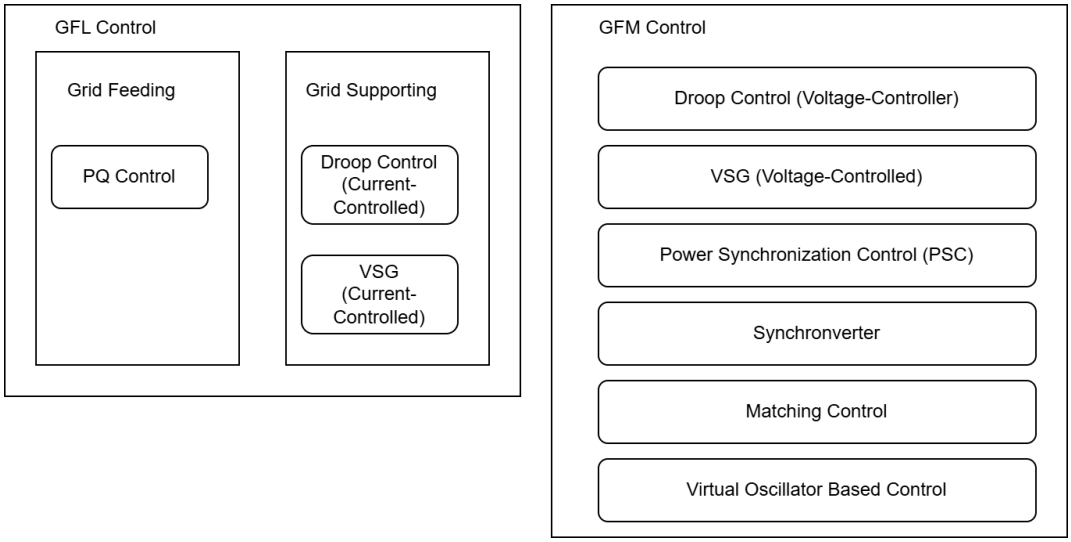

Figure 2.1: fig: Grid Connected Converter Classification: GFL and GFM Control [16]

2.1.1 Grid Following Inverters

A fundamental challenge in low-inertia power systems is that most existing inverter controllers are equipped with GFL control. This type of control is designed under the assumption that inertial sources, such as synchronous generators or grid-forming inverters, regulate the voltage and frequency of the grid. [8]. Another challenge arises because large PV plants or onshore wind farms are often located far from consumption centers; consequently, long transmission lines are required. As a result, the grid impedance "seen" from the IBR side tends to be high, and such areas are commonly referred to as weak parts of the grid. In these sections, maintaining voltage regulation through conventional methods becomes difficult.

Currently, the majority of PV inverters connected to the grid operate as grid-following (GFL) inverters. This type of inverter adjusts its power output by synchronizing with the grid through a Phase-Locked Loop (PLL). The PLL works by continuously measuring the angle and frequency of the grid voltage. [12].

The synchronization of a GFL inverter is achieved through a Phase-Locked Loop (PLL). In this configuration, the inverter behaves as a current source, injecting current into the existing grid voltage. From a control perspective, a GFL inverter can be modeled as a controlled current source connected in parallel with a high impedance. The inverter measures the voltage at the Point of Common Coupling (PCC), v_{PCC} , using the PLL. This signal is then transformed via the Clarke and Park Transformation into the direct and quadrature (dq) components. The power control sets the desired dq currents required to inject the desired Active and Reactive Power. The Current Control source model is shown in Fig 2.1. C_p denotes the outer power control loop and θ represents the phase angle. Under the GFL operation, only current magnitude and phase angle in the output current are adjusted to achieve the desired active/reactive power outputs. The current source frequency remains identical to the grid frequency.

The Grid-Following (GFL) control strategy operates by delivering the commanded active P_{ref} and reactive Q_{ref} power based on the grid measurements provided by the PLL. The power control block calculates the reference currents, which are expressed in the dq-frame and regulated by a fast inner current-control loop that ensures the inverter output current follows its reference accurately. In this way, the inverter can be represented as a controlled current source connected to the grid at the PCC through the grid impedance, depending on the existing grid voltage to maintain synchronization and power delivery. During large disturbances, the GFL inverter detects changes through voltage and current measurements, which inherently introduce delays in the provision of active and reactive power support. From a small-signal stability

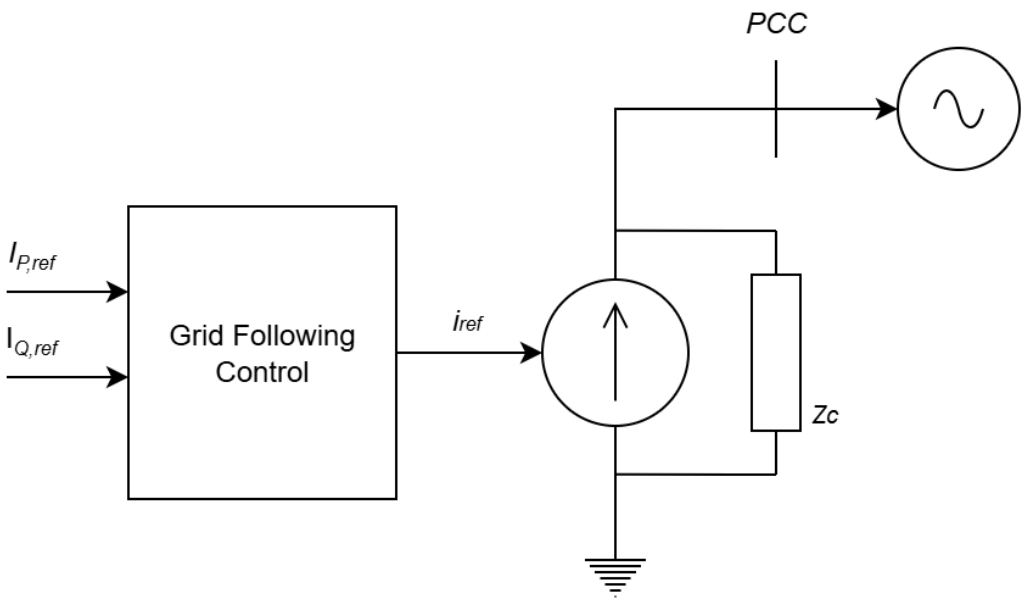

Figure 2.2: fig:Grid Following Inverter Control Structure [18]

perspective, since the GFL inverter relies on the PLL for grid voltage and angle measurements, its stability margin can be significantly reduced under sudden grid variations.[14]

Next, the detailed control blocks of the Grid-Following Inverter is presented. The measured grid current is denoted by $I(f)$ The inverter output voltage is represented by U_{out}, and θ denotes the phase angle of the grid voltage. After the inverter is synchoniyed within the grid, the control references are then sent to the control blocks to achieve the desired performance. The GFL inverter, aside from its capability to provide limited grid support, is primarily designed for efficient power conversion, enabling it to deliver high-quality power to the grid under normal grid operating conditions. Beyond these limits, the GFL inverter must be disconnected. [15]

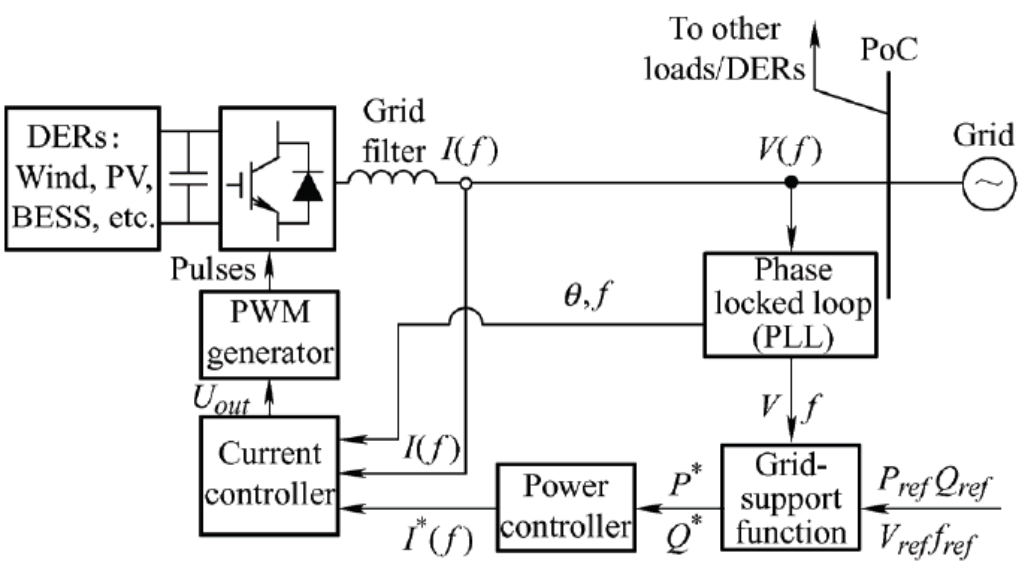

Figure 2.3: fig:Grid Following Inverter Detailes Control Blocks [15]

2.1.2 Grid Forming Inverters

To address the increasing share of Grid-Following (GFL) inverters in power systems, the concept of Grid-Forming (GFM) control was introduced. This approach aims to enable one or more inverters to operate as voltage and frequency regulators, capable of forming a local power grid. Unlike GFL inverters, GFM control does not rely on a Phase-Locked Loop (PLL) for synchronization. Instead, GFM inverters can self-synchronize with the grid by generating their own voltage and frequency references. [11]

GFL inverters depend on a PLL to align with the existing grid, whereas GFMs autonomously establish their voltage and frequency setpoints. This capability enhances grid stability and support functions. GFM converters operate as voltage sources that internally generate their own voltage and frequency references. By emulating the inertia and damping characteristics of synchronous machines, GFM controllers provide improved frequency and voltage support. These features make them particularly robust in weak-grid, islanded, and high-renewable environments, where fast and adaptive control is crucial. Overall, GFMs demonstrate greater independence, stability, and flexibility under varying grid conditions, positioning them as a key enabling technology for future power systems with high renewable penetration. [18]

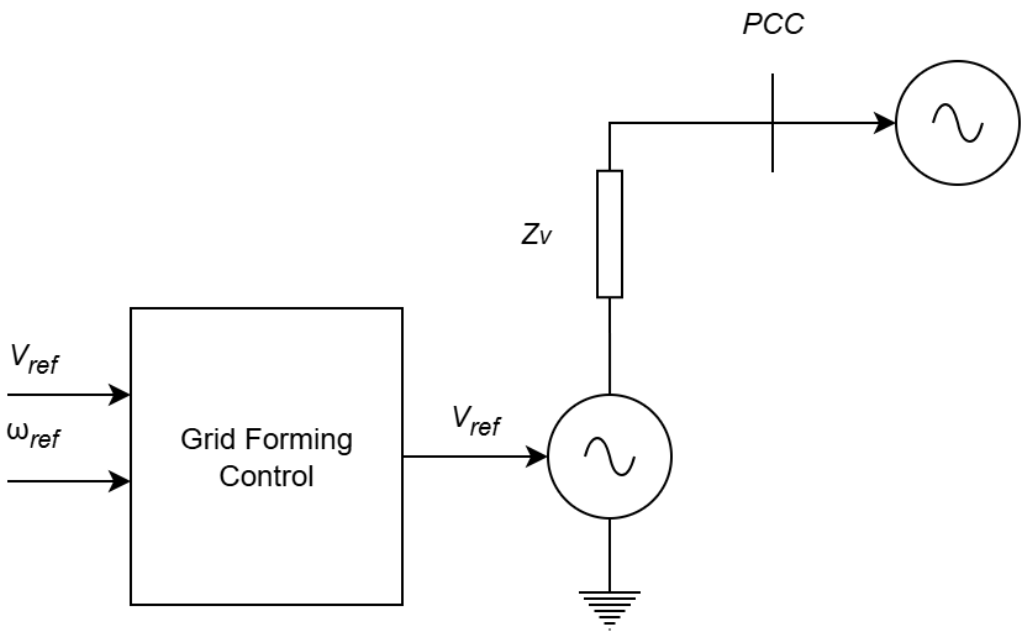

Figure 2.4: fig:Grid Forming Inverter Control Structure [18]

In this figure, Z_{load} represents the equivalent impedance of all other loads connected to the network during islanded operation.

The most common GFM control strategies include droop control, Virtual Oscillator Control (VOC), and Virtual Synchronous Generator (VSG) methods. These approaches allow GFMs to provide voltage, frequency, and inertia support to the grid while maintaining stable and coordinated operation under parallel inverter conditions. Additional functionalities have been developed to extend their capabilities, such as self-synchronization (especially for two-stage inverter topologies), which adds DC-link voltage regulation through droop functions. Other advanced features include seamless mode transition, enabling smooth switching between grid-connected and islanded operation; black-start capability, allowing system restoration after a total blackout; and coordinated control, which enables operation under unbalanced grid conditions. [15].

Next, the detailed control structure of a GFM inverter is shown. In contrast to GFL inverters, GFMs do not require explicit synchronization. During normal grid-connected operation, a GFM inverter follows power reference signals provided by a system-level controller or a Maximum Power Point Tracking (MPPT) algorithm to deliver high-quality power to the grid. Under abnormal grid conditions, however, the inverter can generate its own voltage and frequency based on internal

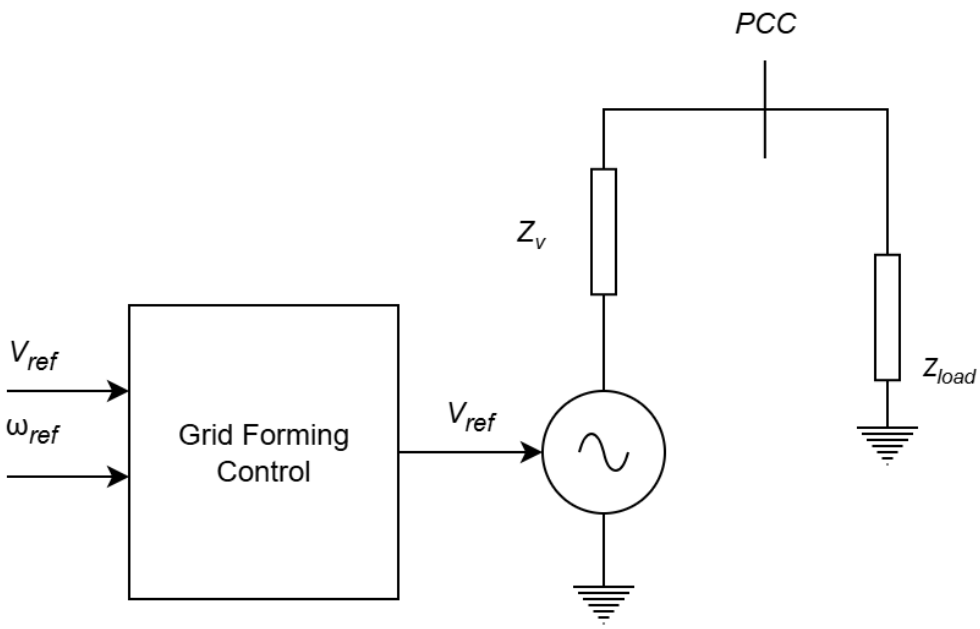

Figure 2.5: fig:Grid Forming Inverter Control Structure Islanding Operation [15]

control references, without using a PLL. This functionality enables direct voltage, frequency, and inertia support to the utility grid. [15]

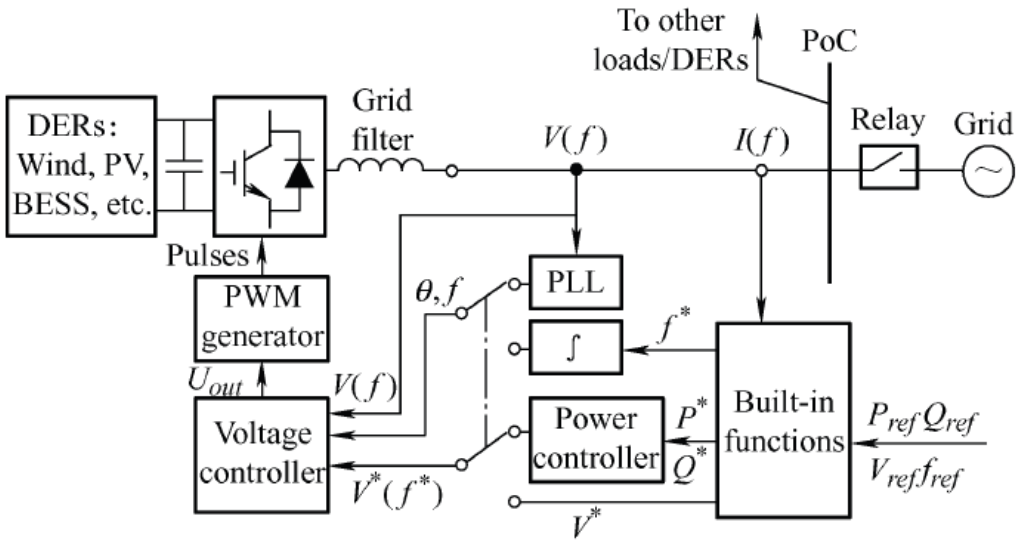

Figure 2.6: fig:Grid Forming Inverter Detailed Control Blocks [15]

In summary, the capabilities that can be provided by GFM inverters are [15]

1. Fast frequency support
2. Synthetic inertia

3. Voltage regulation and improved transient voltage stability
4. Black start capability
5. Operation in grid-connected mode as well as in islanded mode
6. Improved damping in low inertia Systems
7. Ride-through functions

2.2 GFM Control Methods

Distributed Generators (DGs) are typically composed of a DC link and two main stages: an input-side converter and a grid-side converter. The input side varies depending on the specific technology and energy source used. The grid-side converter, on the other hand, usually consists of a DC/AC converter.

Grid-Forming technologies, through autonomous adjustment of their output voltage and frequency, ensure seamless operation regardless of dynamic load conditions or variations in solar irradiance — for instance, in photovoltaic grid-forming plants. These inverters operate based on fundamental control principles that include power regulation, frequency control, and voltage support.[19]

- Power control strategy: GFM control algorithms control the active and reactive power outputs, in this way, devices can balance effectively power generation and demand when demand or generation fluctuate.
- Frequency Regulation: GFM adjust autonomously grid frequency, in case of frequency deviatons, GFM modify its output to restore the grid frequency nominal value.
- Voltage control: By controlling reactive power flow, GFMs are able to provide grid support during transient conditions and ensure voltage stability.

The primary objective in controller design, regardless of the selected control method, is to meet the requirements established by grid codes. These requirements ensure the continuous and stable operation of the power converter under both steady-state and transient conditions. [16]

2.2.1 Droop Control

The droop control method emulates the speed-droop mechanism of a synchronous generator. It is derived from the concept of primary frequency control and enables power sharing proportional to each converter's nominal power. In this control strategy, an inverse relationship exists between frequency deviation and active power variation. [16]

Droop control is one of the most mature and widely implemented Grid-Forming control methods. It adjusts the frequency and amplitude of the reference voltage through the P–f and Q–V droop loops, respectively. The main purpose is to emulate the voltage and frequency regulation behavior of synchronous generators. However, the rotor dynamics described by the swing equation—which represent the mechanical motion of large rotating machines—are not reproduced. As a result, droop-controlled inverters cannot inherently provide inertia support.

The frequency and voltage dynamics within the droop control loop can be expressed as follows: [3]

$$\begin{cases} \omega = \omega_{\text{ref}} + K_P(P_{\text{ref}} - P) \\ V = V_{\text{ref}} + K_Q(Q_{\text{ref}} - Q) \end{cases} \tag{2.1}$$

In the equations above, ω and V represent the inverter's output frequency and voltage magnitude, respectively. P and Q correspond to the measured active and reactive power, while P_{ref} and Q_{ref} denote their reference values. The terms K_P and K_Q are the frequency and voltage droop coefficients.

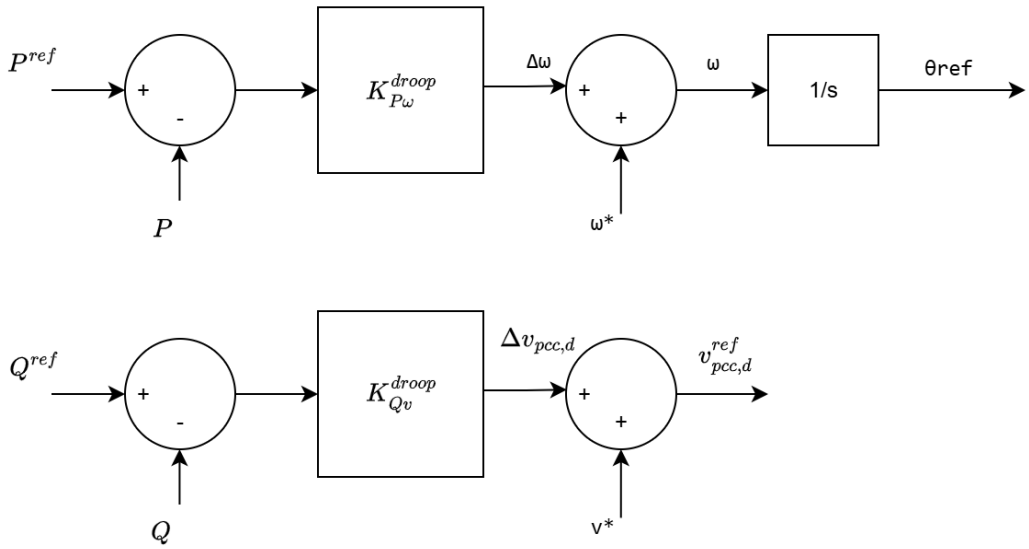

Figure 2.7: Block diagram of frequency and voltage droop control. [16]

Droop-based control uses voltage and frequency characteristics to regulate power sharing among multiple inverters. This feature is highly beneficial for decentralized systems, as it enables proper power distribution without the need for explicit communication or centralized synchronization, resulting in a more robust and scalable control architecture. [19]

2.2.2 Virtual Synchronous Machine

The concept of the Virtual Synchronous Machine (VISMA or VSM) or also refered as Virtual Synchronous Generator (VSG) is intendet to emulate the behaviour of the synchronous generator, inspired by the swing equation, which represents the rotor-side dynamics of the SG, with the purpose of stabilizing frequency grid fluctuations in a grid with high presence of IBRs.

$$\dot{\theta}^{ref} = \omega \tag{2.2}$$

$$\dot{\omega} = \frac{1}{J\omega}\left(P^{ref} - P\right) + \frac{D_p}{J}\left(\omega^* - \omega\right) \tag{2.3}$$

$$v_{pcc,abc}^{ref} = 2\omega M_f i_o \begin{bmatrix} \sin(\theta) \\ \sin\left(\theta - \frac{2\pi}{3}\right) \\ \sin\left(\theta - \frac{4\pi}{3}\right) \end{bmatrix} \tag{2.4}$$

$$i_o = \frac{k_p}{M_f}\left(v^* - \|v_{pcc,dq}\|\right) + \frac{k_i}{M_f}\int_0^t \left(v^* - \|v_{pcc,dq}(\tau)\|\right) d\tau \tag{2.5}$$

In contrast with the droop control, VSM emulates the rotor motion and the electromagnetic transient equation of the synchronous machine, in this way, virtual inertia can be provided, as the control tries to replicate the inherent behaviour of big rotating masses, when subjecteds to a fault, basically natural inertia (describe what inertia is). This method avoid rapid fluctiations in the frequency and the voltage, it also provides inertia, damping and voltage support. The equation that descrobes the VSM control is represented by [3].

$$J\omega s = \frac{(P_{\text{ref}} - P)}{\omega_{\text{ref}}} - D(\omega_{\text{ref}} - \omega) \tag{2.6}$$

AGREGAR IMAGENES DEL VIRTUAL SYNCHRONOUES MACHINE

J is the rotational inertia, D denotes the damping coefficient for the frequency. The emulation of the behaviour of the synchronous machine allows the GFM inverter to provide virtual inertia which support stabilizing the grid during dynamic grid conditions. A clear disadvantage of this control technique is that the inverter tunnnig parameters is complex and the droop control technique is more mature and proved. [19]

To emulate the swing equation, a short-term energy storage unit and the appropiate controller is used to provide short term virtual inertia for anz disrtributed energy resource. As mentioned, the swing equation represents the rotor side dynamics of a synchronoues machine as. [14]

$$J\omega_0 \frac{d\omega_r}{dt} + D_p\omega_r = P_m - P_e \tag{2.7}$$

where ω_r, D_p, J, P_m and P_e are angular speed of the rotor, damiping constant, the moment of inertia, mechanical power and electrical power respectively. The transfer function of basic VSG control can be expressed as shown in the equation, where D_p and k_m are chosen based on the expected or desired $P - \omega$ droop, while J is selected based on the required virtual inertia provision. On the other hand, one key advantge of the VSG over real synchronous machinesis that the design parameters, such as D_p and J can be modified during operation [14]

$$K_{\text{vsg}} = \frac{\Delta\omega}{\Delta P} = \frac{1}{(D_p + k_m)} \left(\frac{1}{\frac{J\omega_0}{D_p + k_m} s + 1} \right) \tag{2.8}$$

The control block diagram of the basic VSG conztol structure based on the swing equation is shown in the figure

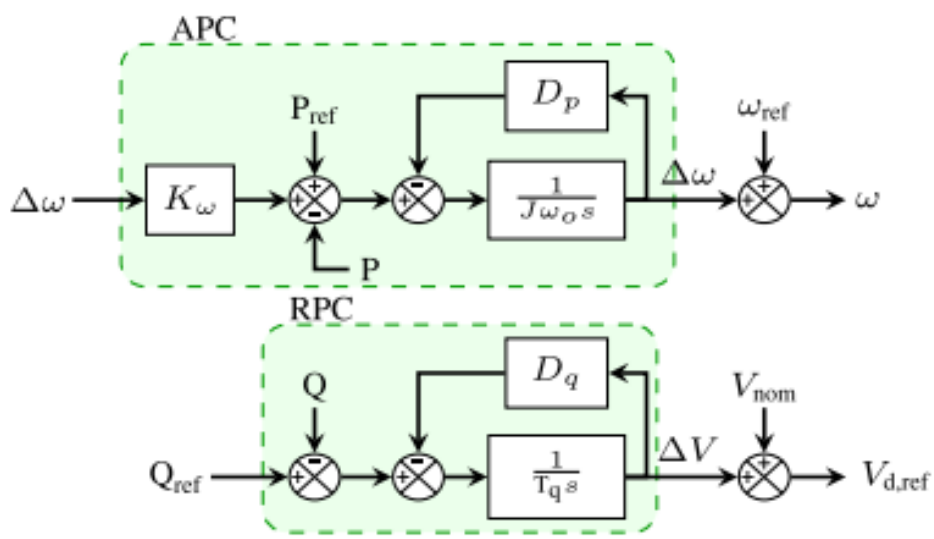

Figure 2.8: Swing based virtual synchronous generator. [14]

2.2.3 Virtual Oscillator Control

This control technique utilizes virtual oscillator models to synchronize multiple grid-forming devices without relying on external signals. This advantage enables independent synchronization, making GFM inverters compatible with a wide range of grid conditions. However, it has been observed that this method is highly sensitive to tuning parameters and offers a limited synchronization range. [19]

In a conventional digitally controlled PWM inverter, the controller samples the output voltage and current and adjusts them through a double closed-loop structure with PI controllers to follow a predefined reference. In contrast, Virtual

Oscillator Control (VOC) internally generates its own reference waveform using a virtual sinusoidal oscillator. When the inverter output follows this internally generated signal, it behaves as if it were a physical oscillator. This self-synchronizing behavior represents the fundamental principle of VOC. [17]

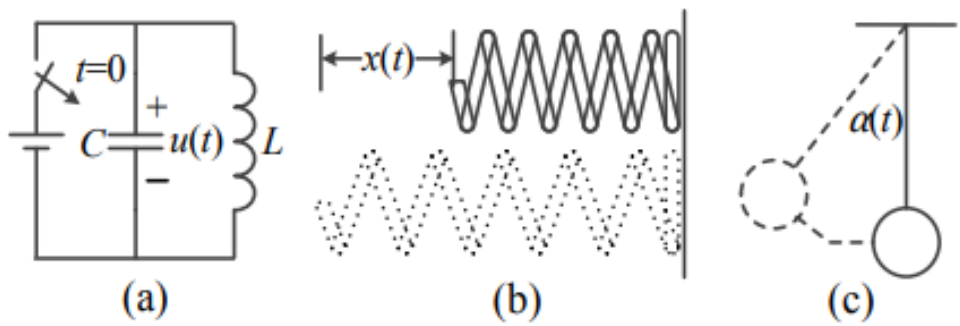

Figure 2.9: Models of virtual resonance generators. [17]

In Fig. 2.9, $u(t)$ denotes the capacitor voltage of the LC electromagnetic oscillator. The VOC is a nonlinear control technique designed to reproduce the dynamics of a nonlinear oscillator. The virtual oscillator consists of a virtual resistor, capacitor, and inductor, together with a voltage-dependent current source. Scaled quantities of the inverter current and capacitor voltage are used to implement the VOC, where the capacitor voltage serves as the control signal in the pulse width modulation (PWM) process to produce the terminal voltage. The controller is a decentralized version of the Van der Pol oscillator, composed of a parallel connection of a virtual inductor, capacitor, conductor, and a cubic voltage-dependent current source. [14]

Unlike droop control, which requires complex active and reactive power calculations and therefore exhibits slower transient performance, VOC-controlled inverters operate without explicit power calculations. In parallel systems, active and reactive power are not direct control variables, allowing for a faster transient response. [17]

Furthermore, VOC behavior converges to that of droop control under steady-state conditions. In addition, due to its time-domain nature, VOC provides faster and more stable transient dynamics compared to the traditional droop control approach. [13]

2.3 Power System Stability

Electric power systems are undergoing a transformation due to the rapid increase of power-electronic-interfaced technologies. As a result, new considerations regarding stability phenomena must be addressed. Power system stability follows the same mathematical foundations as any dynamic system. [7]

In the past, the dynamic behavior of power systems was mainly governed by synchronous generator dynamics. However, modern grids have changed significantly with the increasing integration of inverter-based resources (IBRs), such as wind and photovoltaic (PV) generation, Flexible AC Transmission Systems (FACTS), High Voltage Direct Current (HVDC) links, and power-electronic-interfaced loads, including Electric Vehicles (EVs) and Heat Pumps (HPs). [5]

Stability in an electric power system is defined with respect to its motion around an equilibrium operating point. Power systems are continuously subjected to disturbances of various magnitudes. Small disturbances, such as load variations, occur constantly and the system must adapt without losing steady operation. In contrast, large disturbances—such as faults or the loss of major generating units—may induce structural changes in the network due to the isolation of affected elements. [7]

Since it is neither economically nor practically feasible to ensure stability against every possible disturbance, contingency studies are carried out based on the probability of occurrence. With the increasing penetration of IBRs, additional

challenges arise, including interactions between converter control loops, limited short-circuit current contribution, and a reduction in system inertia. [5]

Power system stability can be defined as "the ability of an electric power system, for a given initial operating condition, to regain a state of operating equilibrium after being subjected to a physical disturbance, with most system variables remaining within acceptable bounds so that the system remains largely intact." [7]

Different types of disturbances excite different components of the system, each acting over distinct time scales. Figure X illustrates the typical ranges associated with these dynamic phenomena.

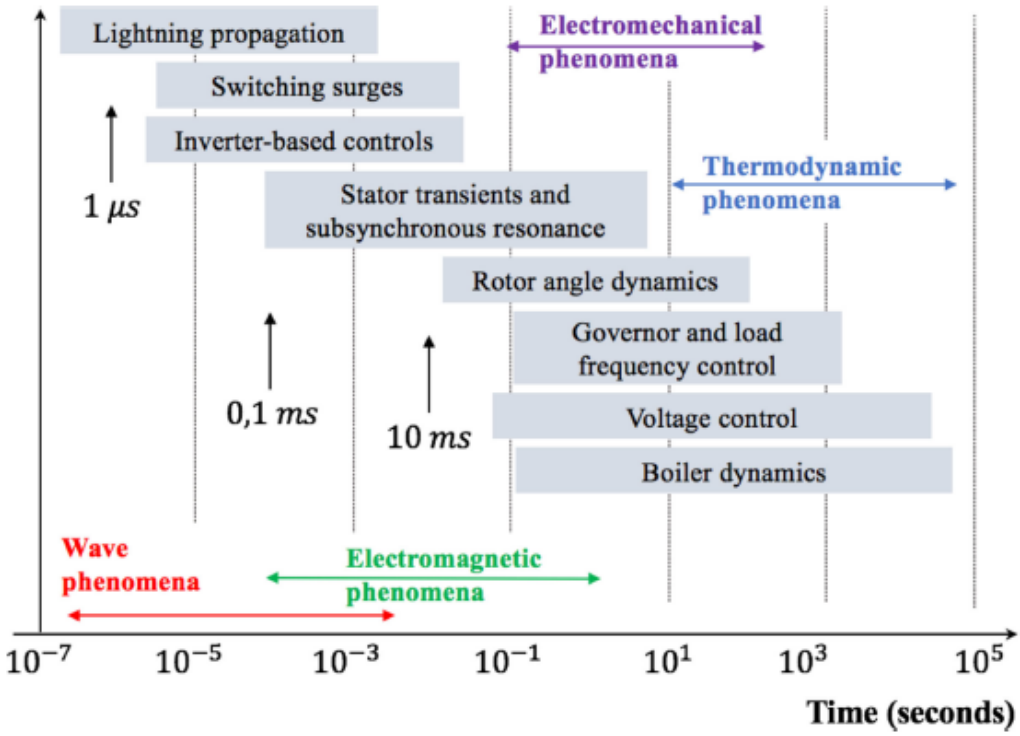

Figure 2.10: Power System Time Scales [5]

It can be observed that inverter-based resources (IBRs) exhibit much faster dynamic phenomena; therefore, analyzing faster dynamics will become increasingly important in the study of future power system behavior. Focusing on the electromechanical time scale of transients allows several simplifications in power system modeling, which facilitates the characterization and analysis of related phenomena. However, within this framework, high-frequency dynamics,such as those caused by power electronic switching,are only represented through simplified models, meaning that fast transients cannot be fully captured. Consequently, it becomes necessary to extend the analysis bandwidth to include faster time scales when studying IBRs.[5]

In this context, a modern power system can be regarded as a high-order, multivariable process whose dynamic response is influenced by numerous devices with distinct characteristics and response times. Stability reflects a condition of equilibrium between opposing forces and depends on the network topology, the operating conditions, and the nature of the disturbance. [7]

Given the high dimensionality and diverse nature of stability phenomena, classification plays a crucial role in enabling targeted analysis with the appropriate level of system modeling detail and suitable analytical methods. [5]

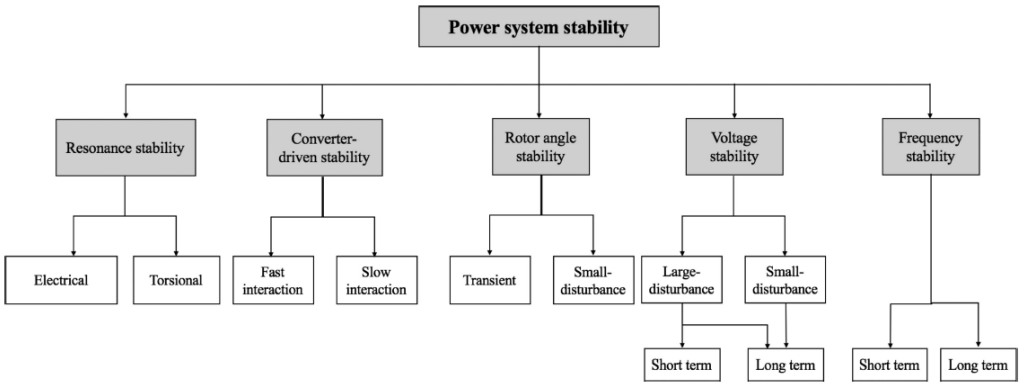

Figure 2.11: Classification of Power System Stability[5]

2.3.1 Categories of Stability

1. Rotor Angle Stability: Is the ability of the interconnected synchronous machines in a power system to remain in synchronism under normal operating conditions and to regain synchrinism after being subjected to a small or large disturbance.

2. Voltage Stability: Voltage Stability refers to the ability of a power system to mantain steady voltages close to nominal values at all buses in the system after being subjected to a disturbance. Depends on the ability of the combined generation and transmission systems to provide the power requested by loads and constrained by the maximum power transfer to a specific set of buses and linked to the voltage drop that occurs when active and/or reactive power flows through imductive reactances of the transmission network

3. Frequency Stability:Refers to the ability of a power system to mantain steady frequency following a severe system upset resulting in a significant imbalance between generation and load. Depends strongly on the ability to mantain/restore equilibrium between system generation and load, with minimum unintentional loss of load. Instability that may result occurs in the form of sustained frequency swings leading to tripping generating units and/or loads.

4. Resonance Stability: The resonance, in general, occurs when energy exchange takes place periodically in an oscillatory manner. These oscillations grow in case of insufficient dissipation of energy in the flow path and are manifested (in electrical power systems) in magnification of voltage/current/torque magnitudes. When these magnitudes exceed specified thresholds, it is said that a resonance instability has occurred.

5. Converter-Driven Stability: Converter-Driven Stability (CDS) refers to the ability of a power system, in which converter-interfaced generation (and/or other power-electronic converters) is significant, to maintain operating equilibrium after a disturbance—accounting for the unique dynamics of converters and their controls. It encompasses the interactions between converter control loops (which may act on millisecond or faster time-scales) and the broader grid dynamics (electromechanical and electromagnetic). Instability within this class typically manifests as oscillatory or divergent behaviour over a wide frequency range (from sub-10 Hz up to hundreds of Hertz or more).

2.3.1.1 Converter-driven stability

High penetration of converter-interfaced renewable generation, such as full-converter wind turbines and photovoltaic plants, has introduced new forms of dynamic interactions between power electronic converters and the AC grid. Unlike synchronous machines, converters lack inherent inertia and rely entirely on fast digital control loops, making their stability strongly dependent on controller tuning and grid strength. As renewable penetration increases, these interactions may excite oscillatory behavior across a wide frequency range—including sub-synchronous oscillations, poorly damped electromechanical modes, and high-frequency resonance—collectively known as converter-driven stability. Several real-world

incidents have demonstrated that weak grids or high IBR penetration can significantly reduce system damping or even lead to instability. These phenomena highlight the need to analyze converter–grid interactions carefully to ensure stable operation in converter-dominated power systems. [9]

Converter-driven stability encompasses all stability phenomena that are influenced or caused by power converters and their associated control systems, occurring across multiple time scales. Slow interactions typically manifest as oscillations below approximately 10 Hz and are associated with outer control loops or system-level dynamics. In contrast, fast interactions arise from inner controller loops and the rapid response of power electronic converters, spanning frequencies from several tens of hertz up to hundreds or even thousands of hertz. The relevant time scales and associated phenomena are illustrated in Fig. X. [4]

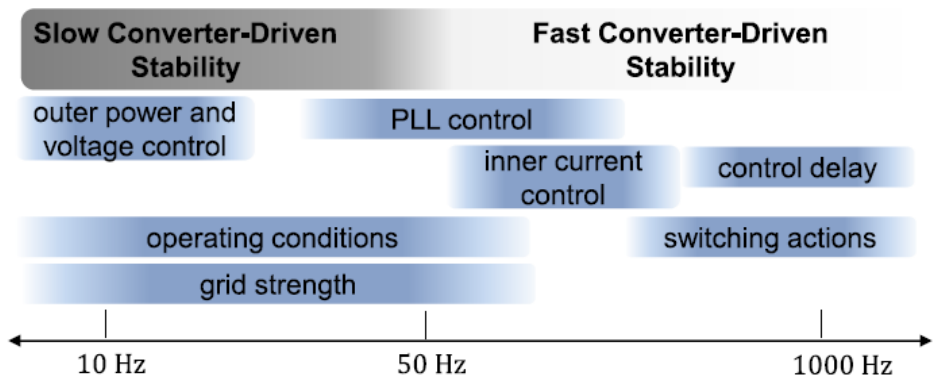

Figure 2.12: Frequency range of converter-driven stability [4]

Analyzing fast converter-driven stability requires accurate and detailed models, which significantly increases computational effort. Electromagnetic transient (EMT) models, formulated using differential equations, are commonly employed to represent fast electromagnetic and control dynamics. However, because they require very small time steps to capture such rapid behavior, their major limitation is the extremely high computational burden. As system size increases, EMT simulations can become prohibitively expensive and, in some cases, practically unsolvable. [4]

Overall, the literature highlights that the increasing penetration of converter-interfaced generation introduces dynamic interactions that demand advanced and scalable modeling approaches. While detailed EMT simulations provide valuable insight into fast converter behavior, they are impractical for large system studies, reinforcing the need for efficient methods capable of capturing inverter-driven phenomena at scale. Continued research and collaboration between academia, industry, and system operators remain essential to ensure that future converter-dominated power systems can operate reliably while supporting ongoing energy-transition objectives.

2.4 RMS and EMT Approaches

Analysis of transient stability in power systems involves computing their nonlinear dynamic response to large disturbances, typically transmission network faults, followed by the isolation of the faulted element through protective relaying [6].

A Phasor Domain Transient (PDT) simulation is a time-domain model that represents the behaviour of power system elements in a simplified and computationally efficient manner. Since the steady-state AC phasor representation of three-phase quantities can be mathematically related to their instantaneous representation, the instantaneous values of voltages and currents are not explicitly calculated. Instead, voltages and currents are represented by complex numbers—phasors—characterised by a magnitude and a phase angle. PDT tools have historically been the only viable approach for most power system studies, given their computational speed and suitability for real-time decision-making.

The RMS (root-mean-square) calculation provides a single effective value for a time-varying waveform whose magnitude changes over time. However, PDT is limited by the fact that the network retains a quasi–steady-state phasor represen-

tation. As a result, it can only represent the fundamental-frequency behaviour of network quantities and excludes the dynamics associated with network elements, commonly known as "network transients" [2].

"Transient stability is the ability of the power system to maintain synchronism when subjected to a severe transient disturbance" [6]. It is strongly influenced by the nonlinear characteristics of the power system. Electromagnetic transient programs based on Dommel's algorithm provide an alternative and more detailed representation of these dynamics.

The behaviour of an electrical power system involves both electromechanical and electromagnetic energy exchanges among its components. During normal operation, under constant load and topology, these exchanges are not explicitly modelled, and the system behaviour can be sufficiently represented using voltage and current phasors in the frequency domain [1].

Interactions involving the magnetic fields of inductances and electric fields of capacitances are referred to as electromagnetic transients, whereas transients arising from the interplay between mechanical energy stored in rotating machines and the electrical energy stored in the network are referred to as electromechanical transients. There is also an intermediate region in which both phenomena interact and may require an appropriate combined representation [1].

Transient waveforms typically contain one or more oscillatory components and can thus be characterised by the natural frequencies of these oscillations. From a modelling perspective, it is more appropriate to classify transients by their relevant time range, which is directly related to the phenomena under investigation.

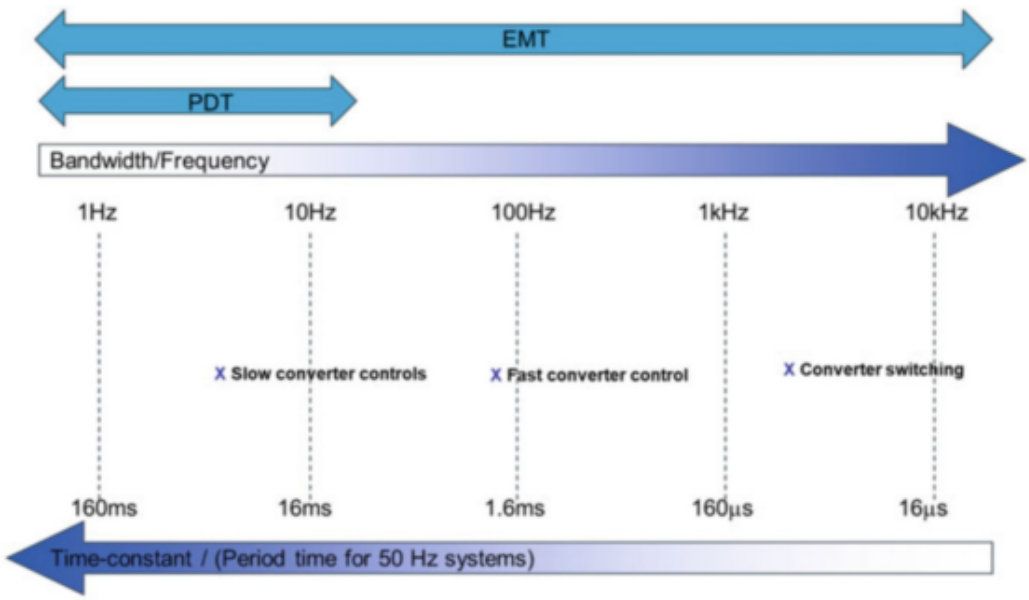

Figure 2.13: Frequency range of coverage for EMT and PDT studies [2].

2.5 Frequency and Voltage Stability Indicators

2.6 Grid Strength and Short-Circuit Ratio

2.7 Real World Examples

2.8 Research Gap and Motivation

Chapter 3

Objectives

3.1 Research Question

3.2 Scenarios

Chapter 4

Developed Method

4.1 Method

As we see ...

Chapter 5

Evaluation der Methode

Chapter 6

Ergebnisse

Chapter 7

Zusammenfassung und Ausblick

Appendix A

Programmcode

Bibliography

[1] J. Arrillaga and N. Watson. *Power Systems Electromagnetic Transients*. IET, 2003.

[2] Babak Badrzadeh and Zia Emin, eds. *Power System Dynamic Modelling and Analysis in Evolving Networks*. Cham, Switzerland: Springer and CIGRÉ, 2020. ISBN: 978-3-030-40152-6. DOI: 10.1007/978-3-030-40153-3.

[3] Yongxiang Cai et al. "Evaluation for Grid-Forming Capability of Battery Energy Storage Systems." In: *2024 8th International Conference on Power and Energy Engineering (ICPEE)*. 2024, pp. 222–226. DOI: 10.1109/ICPEE64457.2024.10949993.

[4] Christina Eckel, Davood Babazadeh, and Christian Becker. "Classification of Converter-Driven Stability and Suitable Modeling and Analysis Methods." In: *IEEE Access* 12 (2024), pp. 53056–53073. DOI: 10.1109/ACCESS.2024.3388098.

[5] Nikos Hatziargyriou et al. "Definition and Classification of Power System Stability – Revisited & Extended." In: *IEEE Transactions on Power Systems* 36.4 (2021), pp. 3271–3281. DOI: 10.1109/TPWRS.2020.3041774.

[6] P. Kundur. *Power System Stability and Control*. McGraw-Hill, 1994.

[7] P. Kundur et al. "Definition and classification of power system stability IEEE/CIGRE joint task force on stability terms and definitions." In: *IEEE Transactions on Power Systems* 19.3 (2004), pp. 1387–1401. DOI: 10.1109/TPWRS.2004.825981.

[8] Yashen Lin et al. *Stabilizing the Power System in 2035 and Beyond: Evolving from Grid-Following to Grid-Forming Distributed Inverter Controllers (Final Technical Report)*. Tech. rep. National Renewable Energy Laboratory (NREL), Golden, CO (United States); Univ. of Minnesota, Minneapolis, MN (United States); Univ. of California, Santa Barbara, CA (United States); Sun Power, San Jose, CA (United states); Lawrence Berkeley National Lab. (LBNL), Berkeley, CA (United States); Sandia National Lab. (SNL-NM), Albuquerque, NM (United States); Univ. of Wisconsin, Madison, WI (United States), Aug. 2021. DOI: 10.2172/1813971. URL: https://www.osti.gov/biblio/1813971.

[9] Jianqiang Luo et al. "Converter-Driven Stability Analysis of Power Systems Integrated with Hybrid Renewable Energy Sources." In: *Energies* 14.14 (2021). ISSN: 1996-1073. DOI: 10.3390/en14144290. URL: https://www.mdpi.com/1996-1073/14/14/4290.

[10] B. Mirafzal and A. Adib. "On Grid-Interactive Smart Inverters: Features and Advancements." In: *IEEE Access* 8 (2020), pp. 160526–160536. DOI: 10.1109/ACCESS.2020.3020935.

[11] Abhishekh Mishra et al. "A Comparative Analysis of Grid-Following and Grid-Forming Control Techniques Used in Inverter-based Resources." In: *2025 IEEE 1st International Conference on Smart and Sustainable Developments in Electrical Engineering (SSDEE)*. 2025, pp. 01–06. DOI: 10.1109/SSDEE64538.2025.10968238.

[12] Dinesh Pattabiraman, R. H. Lasseter., and T. M. Jahns. "Comparison of Grid Following and Grid Forming Control for a High Inverter Penetration Power System." In: *2018 IEEE Power & Energy Society General Meeting (PESGM)*. 2018, pp. 1–5. DOI: 10.1109/PESGM.2018.8586162.

[13] Amro Quedan, Deepak Ramasubramanian, and Evangelos Farantatos. "Virtual Oscillator Controlled Grid Forming Inverters Modelling and Testing in Phasor Domain." In: *2021 IEEE 12th Energy Conversion Congress & Exposition - Asia (ECCE-Asia)*. 2021, pp. 2375–2380. DOI: 10.1109/ECCE-Asia49820.2021.9479398.

[14] Dayan B. Rathnayake et al. "Grid Forming Inverter Modeling, Control, and Applications." In: *IEEE Access* 9 (2021). Received July 15, 2021; accepted August 7, 2021; published August 13, 2021; current version August 24, 2021, pp. 114723–114741. DOI: 10.1109/ACCESS.2021.3104617. URL: https://doi.org/10.1109/ACCESS.2021.3104617.

[15] Guanhong Song, Bo Cao, and Liuchen Chang. "Review of Grid-forming Inverters in Support of Power System Operation." In: *Chinese Journal of Electrical Engineering* 8.1 (2022), pp. 1–15. DOI: 10.23919/CJEE.2022.000001.

[16] Macit Tozak et al. "Modeling and Control of Grid Forming Converters: A Systematic Review." In: *IEEE Access* 12 (2024), pp. 107818–107843. DOI: 10.1109/ACCESS.2024.3437236.

[17] Yong Tu et al. "Improved virtual oscillator control for parallel operation inverter systems." In: *2016 IEEE 8th International Power Electronics and Motion Control Conference (IPEMC-ECCE Asia)*. 2016, pp. 2063–2067. DOI: 10.1109/IPEMC.2016.7512614.

[18] Hao Xu et al. "A Review of Control Technologies and Principles for Grid-Forming Converters." In: *2025 10th Asia Conference on Power and Electrical Engineering (ACPEE)*. 2025, pp. 1496–1500. DOI: 10.1109/ACPEE64358.2025.11041180.

[19] Younes Zahraoui et al. "Grid-Forming Technologies for Resilient Renewable Energy Integration Into Power Systems: A Review." In: *2024 International Conference on Smart Systems and Technologies (SST)*. 2024, pp. 191–196. DOI: 10.1109/SST61991.2024.10755449.